PowerXL DC1

PowerXL DG1

Enclosed 18-Pulse Drive

2.1 Product Overview V6-T2-2

OEM Drives

2.2 PowerXL DE1 Series V6-T2-9

2.3 PowerXL DC1 Series Drives V6-T2-15

2.4 PowerXL DA1 Series Drives V6-T2-25

2.5 M-Max Series Drives V6-T2-36

General Purpose Industrial Drives

2.6 PowerXL DG1 Series Drives

DG1 Drives V6-T2-48

DG1 Enclosed Drives V6-T2-69

2.7 SVX Drives

SVX Drives V6-T2-97

SVX Enclosed Drives V6-T2-135

General Purpose HVAC Drives

2.8 H-Max Series Drives

H-Max Drives V6-T2-170

H-Max IntelliPass and IntelliDisconnect Drives V6-T2-182

Performance Drives

2.9 SPX Drives V6-T2-204

2.10 Clean Power Drives

Product Overview V6-T2-245

Enclosed Passive Filtered Drives

EGF Drives V6-T2-252

CFX Drives V6-T2-272

HCX Enclosed 12-Pulse Drives V6-T2-298

CPX Enclosed 18-Pulse Drives V6-T2-302

RGX Enclosed Regenerative Drives V6-T2-326

2.11 LCX Liquid Cooled Drives V6-T2-339

2.12 SPA/SPN/SPI Common DC Bus Drives V6-T2-355

Revision notes

Volume 6—Solid-State Motor Control, CA08100007E

Tab 2—Adjustable Frequency Drives

Revision date	Section	Change page(s)	Description
01/04/2017	All	All	Full revision

Powering Business Worldwide

A Drive For Any Application

Your application might call for an ultra-compact solution, clean power or future configurability.

Whether it is a standard product from the catalog or a custom-enclosed variable frequency drive (VFD) solution, Eaton delivers.

Eaton drives are designed for industrial, HVAC, water/wastewater treatment, machinery OEM and other application demands.

Whether designing a new industrial complex, renovating an existing structure or developing a new machine, Eaton has the right product for your application.

PowerXL® Family

Application	DE1	DC1	DA1	DG1	EGF (Filtered)
Single-phase input	Yes	Yes	Yes	Yes	—
Maximum 230 V hp	3	15	7.5	125	125
Maximum 480 V hp	10	30	15	250	250
Maximum 575 V hp	—	—	20	250	250
OEM drives	●	●	●	●	
General purpose HVAC drives				● ■	
General purpose industrial				● ■	
Performance			●		
Low harmonic					■

9000X Family

Application	M-Max	H-Max	SVX	SPX	LCX	SPI	CFX (Filtered)	HCX (12-Pulse)	CPX (18-Pulse)	RGX (AFE)
Single-phase input	Yes	—	Yes	Yes	—	—	—	—	—	—
Maximum 230 V hp	15	125	125	125	—	—	100	60	200	—
Maximum 480 V hp	25	250	250	2200	3200	2400	400	125	800	900
Maximum 575 V hp	7.5	200	200	2300	2800	2200	400	—	800	750
OEM drives	●									
General purpose HVAC drives		● ■						■		
General purpose industrial			● ■	● ■						
Performance				● ■	● ▲	● ▲		■	■	■
Low harmonic							■	■	■	■

● = Open drive standard
■ = Enclosed drive standard
▲ = Enclosed—consult Enclosed Drives Plant (Watertown, WI)

A History of Drives

Throughout the years, Eaton's drive offering has evolved as technology has changed. Some drives are no longer available, but are listed below for reference and aid in finding the drive in our current offering that fits your application. If needed, please contact the Drives Technical Resource Center (1-877-ETN-CARE, option 2, option 6) for assistance in finding the current drive to suit your needs.

Legacy Product Offering

Application	HVX	SLX	NFX	GVX	MVX	SV	HV	CP (18-Pulse)
Single-phase input	Yes	—	Yes	Yes	Yes	Yes	Yes	—
Maximum 230 V hp	75	40	2	50	7.5	100	150	—
Maximum 480 V hp	150	100	—	125	10	1100	1000	800
Maximum 575 V hp	—	100	—	125	10	800	700	—
OEM drives		■	■					
General purpose HVAC drives	●	■					■	
General purpose industrial		■		■		■		
Performance				■	■			■
Low harmonic								■
Current product offering	H-Max	DG1	DE1	DC1 / DG1	DC1 / DA1	DG1	H-Max	CPX

● = Open drive standard

■ = Legacy product; no longer available

Product Selection Guide

2

OEM Drives

PowerXL DE1 Series

Page V6-T2-9

Applications

Machinery OEM variable speed starter

Description

The DE1 VSS is a variable speed starter that brings the simplicity of a electromechanical starter with the additional functionality of a variable frequency drive. The DE1 offers simple installation in a compact, keypad-less design. With the use of the intuitive plug-in configuration module or the integration of SmartWire-DT®, the DE1 is the simplest solution for variable speed. The VSS is great for HVAC, material handling and general MOEM applications.

Offering/Range

Single-phase to three-phase
230 V to 3 hp

Three-phase to three-phase
230 V to 3 hp

Three-phase to three-phase
480 V to 10 hp

Enclosure

Open IP20

PowerXL DC1 Series

Page V6-T2-15

Applications

General-purpose microdrive

Machinery OEM drive

Description

The DC1 VFD is a compact VFD with only 14 basic parameters, SmartWire-DT® and EtherNet/IP connectivity and outstanding ease of mounting and installation. The DC1 is perfect for quick commissioning and is ideal for panel builders. The newest version adds support for sensorless vector control and permanent magnet motor compatibility. This drive supports single-phase motor applications, and an IP66 offering provides unique mounting with integrated disconnect and cover controls.

Offering/Range

Single-phase to single-phase
115 V to 0.75 hp
230 V to 1.5 hp

Single-phase to three-phase
115 V to 1.5 hp
230 V to 5 hp

Three-phase to three-phase
230 V to 15 hp
480 V to 30 hp

Enclosure

Open IP20, IP66

PowerXL DA1 Series

Page V6-T2-25

Applications

High-performance microdrive

Machinery OEM drive

Description

The DA1 VFD is the perfect match for demanding OEM applications. High-performance processor, safe torque off, multiple fieldbus protocols including SmartWire-DT, sensorless vector control and the possibility to operate permanent magnet motors are sure to leave a lasting impression. The DA1 includes an IP66 offering as well.

Offering/Range

Single-phase to three-phase
230 V to 3 hp

Three-phase to three-phase
230 V to 7.5 hp
480 V to 15 hp
600 V to 20 hp

Enclosure

Open IP20, IP66

M-Max Series

Page V6-T2-36

Applications

General-purpose microdrive

Description

The M-Max™ VFD is a compact microdrive with a broad power range, perfectly suited for machinery applications in many industries: food and beverage, HVAC, packaging, pumping, general machine and more.

Offering/Range

Single-phase to three-phase
115 V to 1.5 hp
230 V to 3 hp

Three-phase to three-phase
230 V to 15 hp
480 V to 25 hp
575 V to 7.5 hp

Enclosure

Open IP20, IP21

Open NEMA 1

Product Selection Guide

General Purpose Industrial Drives

PowerXL DG1 Series

Page V6-T2-48

Applications

General-purpose drive

Description

The DG1 general-purpose drives are part of the Eaton next-generation PowerXL series of adjustable frequency drives specifically engineered for today's more demanding commercial and industrial applications. With an industry-leading energy-efficiency algorithm, high short-circuit current rating and robust design, the DG1 offers customers increased efficiency, safety and reliability.

Offering/Range

Single-phase to three-phase
230 V to 40 hp
480 V to 60 hp

Three-phase to three-phase
230 V to 125 hp
480 V to 250 hp
575 V to 250 hp

Enclosure

Open IP21, IP54
Open NEMA 1, 12
Enclosed NEMA 1, 12, 3R
Consult Eaton for NEMA 4X

SVX

Page V6-T2-97

Applications

General-purpose drive

Description

The SVX VFD is a general-purpose, compact, modular solution for variable speed applications and offers a variety of features and application capabilities. With a reliable design, quick startup and flexibility with options, the SVX provides a great solution for customer's commercial and industrial applications.

Offering/Range

Single-phase to three-phase
230 V to 40 hp
480 V to 60 hp

Three-phase to three-phase
230 V to 125 hp
480 V to 2200 hp
575 V to 2300 hp

Enclosure

Open IP20, IP21, IP54
Open NEMA 1, 12
Enclosed NEMA 1, 12, 3R
AGSVX (agriculture config)
Consult Eaton for NEMA 4X

General Purpose HVAC Drives

H-Max Series

H-Max

Page V6-T2-170

Applications

General-purpose HVAC drive

Description

The H-Max™ VFD is specifically designed to meet the needs of the HVAC industry by offering leading HVAC software and hardware features. With an industry-leading energy efficiency algorithm, high short-circuit current rating and robust design, it offers customers increased efficiency, safety and reliability.

Offering/Range

Three-phase to three-phase
230 V to 125 hp
480 V to 250 hp

Enclosure

Open IP21, IP54
Open NEMA 1, 12
Enclosed NEMA 1, 12, 3R
IntelliDisconnect (breaker included)
IntelliPass (bypass included)

H-Max IntelliPass and IntelliDisconnect Drives

Page V6-T2-182

Applications

General-purpose HVAC drive

Description

The H-Max IntelliPass and IntelliDisconnect use the H-Max drive along with ***XT*** series contactors and optional manual override switches to provide the ability to bypass the H-Max drive. The IntelliPass construction features allow for easy installation, reliable operation and serviceability with additional onboard wire space and removable conduit plates with knockouts.

Offering/Range

Three-phase to three-phase
208 V to 30 hp
230 V to 30 hp
480 V to 75 hp

Enclosure

Open IP21, IP54
Open NEMA 1, 12
Enclosed NEMA 1, 12, 3R
IntelliDisconnect (breaker included)
IntelliPass (bypass included)

Product Selection Guide

2

Performance Drives

SPX

Page V6-T2-204

Applications

High-performance drive

Description

The SPX VFD is a compact, modular solution for high-performance variable speed applications. When high performance is critical to a customer's application, the SPX VFD is the ideal choice. They are equipped with high processing power, capable of closed loop feedback, safe torque off, permanent magnet motor operation and very precise motor control.

Offering/Range

Single-phase to three-phase
230 V to 40 hp
480 V to 60 hp

Three-phase to three-phase
230 V to 125 hp
480 V to 2200 hp
575 V to 2300 hp

Enclosure

Open IP20, IP21, IP54
Open NEMA 1, 12
Enclosed NEMA 1, 12, 3R
AGSVX (agriculture config)
Consult Eaton for NEMA 4X

Low Harmonic Drives

Passive Filtered—EGF

Page V6-T2-252

Applications

Filtered drive

Description

Eaton's enclosed passive filtered drives use tuned passive filters to significantly reduce line harmonics at the drive input terminals.

Offering/Range

208 V: 0.75–100 hp
230 V: 0.75–125 hp
480 V: 1–250 hp

Enclosure

Enclosed NEMA 1, 12, 3R
Consult Eaton for NEMA 4X

Passive Filtered—CFX

Page V6-T2-272

Applications

Filtered drive

Description

The CFX VFD uses a tuned passive filter to significantly reduce the line harmonics generated by a standard 6-pulse drive. Designed for small to mid-sized drive applications, the CFX, in conjunction with the CPX, offers the user a tiered approach to harmonic mitigation.

Offering/Range

Three-phase to three-phase
230 V to 100 hp
480 V to 400 hp
575 V to 400 hp

Enclosure

Enclosed NEMA 1, 12, 3R
Consult Eaton for NEMA 4X

Product Selection Guide

Performance Drives

Low Harmonic Drives

12-Pulse—HCX

Page V6-T2-298

Applications

12-pulse drive

Description

The enclosed HCX drive is specifically tailored for HVAC applications where clean power is necessary. The enclosed HCX drive uses Eaton's SVX drive with a 12-pulse phase shifting transformer to deliver a substantial reduction in voltage and current harmonics.

Offering/Range

208 V: 7.5 to 60 hp
230 V: 7.5 to 60 hp
480 V: 25 to 125 hp

Enclosure

Enclosed NEMA 1, 12

18-Pulse—CPX

Page V6-T2-302

Applications

18-pulse drive

Description

The CPX VFD uses advanced 18-pulse clean power technology that significantly reduces line harmonics at the drive input terminals and is designed to exceed IEEE 519-1992 requirements. Delivering true power factor and reducing harmonic distortion prevents upstream transformer overheating and overloading of breakers and feeders, enabling the application of variable frequency drives on generators and other high-impedance power systems.

Offering/Range

Three-phase to three-phase
230 V to 200 hp
480 V to 800 hp
575 V to 800 hp
(Consult Eaton for larger hp)

Enclosure

Enclosed NEMA 1, 12, 3R
Consult Eaton for NEMA 4X

Regenerative—RGX

Page V6-T2-326

Applications

Regenerative drive

Description

The RGX is an enclosed solution to meet the needs of customer's regenerative load applications. It combines Eaton's comprehensive family of DC common DC bus drive products together with the necessary circuit protection and filtering to give the customer an all-in-one package. The RGX is available in 480 V and 575 V configurations in sizes up through 900 hp.

Offering/Range

Three-phase to three-phase
480 V: 900 hp
575 V: 750 hp

Enclosure

Enclosed NEMA 1

Product Selection Guide

2

Performance Drives

Low Harmonic Drives

LCX

Page V6-T2-339

Applications

Liquid cooled drive

Description

The LCX VFD is well suited for locations when air-cooling would be difficult or expensive or when space is at a premium. These extremely compact drives are suitable for ships, mines and heavy industry.

Offering/Range

Three-phase to three-phase
480 V to 3200 hp
575 V to 2800 hp

Enclosure

Open IP00

SPA/SPN/SPI

Page V6-T2-355

Applications

Common DC bus drive
Active front end drive
Regenerative drive

Description

Eaton offers a comprehensive range of common DC bus VFD products. This includes a number of front-end units and inverter units in the entire power range. Common DC bus drives are used in a multitude of applications and combinations. Drives that are braking can transfer the energy directly to the drives in a motoring mode.

Offering/Range

Three-phase to three-phase
480 V to 2400 hp
575 V to 2200 hp

Enclosure

Open IP00, IP21
Open NEMA 1

PowerXL DE1 Series

Contents

Description	*Page*
PowerXL DE1 Series	
Catalog Number Selection	**V6-T2-10**
Product Selection	**V6-T2-10**
Accessories	**V6-T2-11**
Technical Data and Specifications	**V6-T2-12**
Dimensions	**V6-T2-14**

Product Description

Eaton's PowerXL® DE1 variable speed starter offers the advantages of both a motor starter and a variable frequency drive in a single device. The DE1 is a compact and easy-to-use device with the ability to change the speed of the motor with the simplicity of a contactor starter. With 14 basic parameters, SmartWire-DT® connectivity and an intuitive configuration module, the DE1 setup and commissioning is easy for any panel builder and MOEM. The DE1 was designed for customers who have concerns of the complexity of a VFD but still require variable frequency and advanced motor protection.

Models rated at 480 volts, three-phase, 50/60 Hz are available in sizes ranging from 0.5 to 10 hp. Models rated at 230 volts, single-phase in/three-phase out, 50/60 Hz are available in sizes ranging from 0.33 to 3 hp.

The DE1 VSS is designed without a keypad to provide a simplistic, cost effective solution. Units are shipped without a keypad. In order to change parameters, there are accessories such as the configuration module that can change up to 5 parameters or connectivity products to connect to the drivesConnect PC Tool.

Features

- Compact, space-saving design
- Rugged design rated up to 60 °C without derating
- DIN rail and screw mountable
- Narrow footprint for true side-by-side installation
- Rated for group motor applications
- Low capacitor design for low harmonics
- Control terminal blocks
  - Three digital inputs
  - One digital/analog (programmable) input
  - One relay output
- Contactor style power wiring
- RS-485/Modbus as standard
- Efficient, simple design without a keypad
  - Three indicating LEDs for fault and condition status
- Reliable design—
  150% for 60 s
  175% for 2 s
- SmartWire-DT and EtherNet/IP ready for expanding communication gateways

Standards and Certifications

Product

- Complies with EN 61800-3

Safety

- IEC 61800-5-1
- CE
- UL
- CSA/cUL
- cTick
- UKRSekpro
- GOST R
- RoHS compliant

Catalog Number Selection

DE1 Series Variable Speed Starter

D E1 - 1 2 4D3 N N - N 20 N

Basic Naming
D = Drive

Device Series
E1 = Economy

Number of Phases
1 = Single-phase main connection/ three-phase motor connection
3 = Three-phase main connection/ three-phase motor connection

Input/Output Voltage
2 = 230 V
4 = 480 V

Current Rating

230 V	460 V
1D4 = 1.4 A, 0.33 hp, 0.25 kW	**1D3** = 1.3 A, 0.5 hp, 0.37 kW
2D3 = 2.3 A, 0.5 hp, 0.37 kW	**2D1** = 2.1 A, 1.0 hp, 0.75 kW
2D7 = 2.7 A, 0.75 hp, 0.55 kW	**3D6** = 3.6 A, 2.0 hp, 1.5 kW
4D3 = 4.3 A, 1.0 hp, 0.75 kW	**5D0** = 5.0 A, 3.0 hp, 2.2 kW
7D0 = 7.0 A, 2.0 hp, 1.5 kW	**6D6** = 6.6 A, 4.0 hp, 3.0 kW
9D6 = 9.6 A, 3.0 hp, 2.2 kW	**8D5** = 8.5 A, 5.0 hp, 4.0 kW
	011 = 11 A, 7.5 hp, 5.5 kW
	016 = 16 A, 10 hp, 7.5 kW

Filter Option
N = No filter

Brake Chopper Option
N = No brake chopper

Display Option
N = No display

Environment Rating
20 = IP20, NEMA 0

Conformation Coated Option
N = Not conformal coated boards

Product Selection

IP20

DE1 Series IP20 Enclosure Drives

hp ①	kW	Volts	100% Continuous Current In (A)	Frame Size	Catalog Number ②
0.33	0.25	200–240 V single-phase in ③/ 230 V three-phase out	1.4	1	**DE1-121D4NN-N20N**
0.5	0.37		2.3	1	**DE1-122D3NN-N20N**
0.75	0.55		2.7	1	**DE1-122D7NN-N20N**
1	0.75		4.3	1	**DE1-124D3NN-N20N**
2	1.5		7	1	**DE1-127D0NN-N20N**
3	2.2		9.6	2	**DE1-129D6NN-N20N**
0.5	0.37	380–480 V three-phase in/ 480 V three-phase out	1.3	1	**DE1-341D3NN-N20N**
1	0.75		2.1	1	**DE1-342D1NN-N20N**
2	1.5		3.6	1	**DE1-343D6NN-N20N**
3	2.2		5	2	**DE1-345D0NN-N20N**
4	3		6.6	2	**DE1-346D6NN-N20N**
5	4		8.5	2	**DE1-348D5NN-N20N**
7.5	5.5		11.3	2	**DE1-34011NN-N20N**
10	7.5		16	2	**DE1-34016NN-N20N**

Notes
① For all applications, select the unit such that the motor current is less than or equal to the rated continuous output current.
② These are constant torque/high overload rated drives.
③ For 230 V three-phase applications, refer to the three-phase to single-phase application note (AP040108EN) to properly set up the system.

Accessories

DE1 Series

PC Communication Kit and Copy/Paste Module

Description	Catalog Number
Bluetooth copy/paste communication stick	**DX-COM-STICK2**
USB to RJ45 panel mount kit	**DX-COM-PCKIT**
USB to RJ45 PC Tool cable	**DX-CBL-PC-3M0**

Keypad Options

Description	Catalog Number
LED remote keypad—7-segment display, IP54 rated	**DX-KEY-LED2** ①
Configuration module—plug-in unit, DIP switch and dial control	**DXE-EXT-SET**

Extension Cables and Data Cable Splitter

Description	Catalog Number
RJ45 communication cable w/terminating resistor	**EASY-NT-R**
RS-485 data cable, RJ45, 0.5 m	**DX-CBL-RJ45-0M5**
RS-485 data cable, RJ45, 1.0 m	**DX-CBL-RJ45-1M0**
RS-485 data cable, RJ45, 3.0 m	**DX-CBL-RJ45-3M0**
RS-485 three-way data cable splitter, RJ45	**DX-SPL-RJ45-3SL**
RS-485 data cable splitter, RJ45, (1 connector to 2 socket)	**DX-SPL-RJ45-2SL1PL**

Communication Modules

Description	Catalog Number
SmartWire-DT interface for DE1 and DC1 IP20	**DX-NET-SWD3**
Dual EtherNet/IP interface for DE1 and DC1 IP20	**DX-NET-ETHERNET2-2**

Commoning Links ②

Description	Max. Devices Used	Catalog Number
460 V, three-phase link	3xFS1	**XTCEXCLK3B**
	2xFS1 + 1xFS2	
	2xFS2	
	4xFS1	**XTCEXCLK4B**
	3xFS1 + 1xFS2	
	1xFS1 + 2xFS2 ③	
	5xFS1	**XTCEXCLK5B**
	4xFS1 + 1xFS2	
	2xFS1 + 2xFS2 ③	
	3xFS2 ③	
460 V, incoming terminal	—	**XTCEXITB** ④

Notes

① Includes 1 m RS-485 data cable.

② Commoning links can be used to connect multiple line side 460 V DE1 units for use in group motor applications.

③ These combinations may result in the total of the individual input currents exceeding the three-phase commoning link's and incoming connection block's ampacity (35 A).

④ Required for group motor applications when using the 460 V commoning links.

Technical Data and Specifications

DE1 Series

Ratings

PowerXL DE1 Basic Controller Standard Ratings

Description	Specification
Protections	
Overload protection	150% for 60s for every 600 seconds
Overvoltage protection	Yes
Undervoltage protection	Yes
Ground fault protection	Yes
Overtemperature protection	Yes
Motor overload protection	Yes
Motor stall protection	Yes
Short-circuit protection	100 kAIC with Type J fuses, 65 kAIC with PKZM, 10 kAIC with FAZ

Programmable Parameters

Description
14 Standard operation parameters
Programmable start function
DC-brake at start and stop
Adjustable switching frequency
Autorestart function after fault
Protections and supervisions
Power section fault indication
External fault
Fieldbus communication
Analog input range selection, signal scaling and filtering
Four preset speed reference

Specifications

PowerXL DE1 Series

Description	Specification
Input Ratings	
Input voltage (V_{in})	±10%
Input frequency (f_{in})	50/60 Hz (variation up to 48–62 Hz)
Connection to power	Maximum of one time every 30 seconds
Output Ratings	
Output voltage	0 to V_{in}
Continuous output current	Continuous rated current I_N at ambient temperature max. 140 °F (60 °C), 150% for 60 seconds, 175% for 2 seconds
Output frequency	0 to 500 Hz
Frequency resolution	0.1 Hz
Initial output current (I_H)	175% for 2s for every 20 seconds Torque depends on motor
Control Characteristics	
Operation mode	U/f control, slip compensation
Switching frequency	4 to 32 kHz
Voltage reference	10 Vdc (max. 10 mA)
Field weakening point	0 to 500 Hz
Acceleration time	0.1 to 600 seconds
Deceleration time	0.1 to 600 seconds
Ambient Conditions	
Ambient operating temperature	–10 °C to +50 °C, for 60 °C there is no derating required ①
Storage temperature	–40 °C to +70 °C
Relative humidity	0 to 95% RH, noncondensing, non-corrosive, no dripping water
Enclosure class	IP20 (FS1–FS3)

Note

① All units do not require derating except for the 10 hp 460 V unit which may require derating depending on the switching frequency used.

Standards—DE1 Series Variable Speed Starter

I/O Specifications

- Digital inputs DI1–DI4 are programmable
- Relay output is programmable
- DI3 and DI4 can be programmed to be digital, thermistor or analog

Includes:

- Four inputs (three digital and one digital/analog)
- Analog input
  - 4–20 mA
  - 0–10 V
- One relay output
- RS-485 interface

Reliability

- Pretested components
- Computerized testing
- Robust design rated to 60 °C

DE1 Series I/O Interface

Terminal		Signal	Factory Preset	Description
0 V	0 V	Reference potential	—	0 V connection
+0 V	+24 Vdc	Control voltage for DI1-DI4	—	Maximum load 100 mA Reference potential V
1	DI1	Digital Input 1	FWD	+10 to 24 V
2	DI2	Digital Input 2	REV	+10 to 24 V
3	DI3	Digital Input 3	Fixed frequency FF1	+10 to 24 V
	Ther.	Thermistor	Fixed frequency FF1	External fault: [Need info] Trip at 3600 Ω Reset at 1600 Ω
4	DI4	Digital Input 4	Frequency reference value	+10 to 24 V
	AI1	Analog Input	Frequency reference value	0 to 10 V 0/4–20 mA Can be switched with parameter P16
13	K13	Relay 1, normally open contact	Active = RUN	Maximum switching load: 250 Vac/6 A or 30 Vdc/5 A
14	K14	Relay 1, normally open contact	Active = RUN	Maximum switching load: 250 Vac/6 A or 30 Vdc/5 A

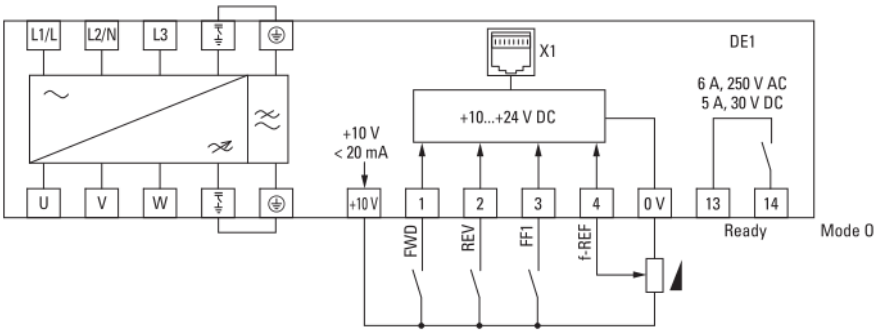

Dimensions

Approximate Dimensions in Inches (mm)

DE1, Sizes FS1 and FS2, Degree of Protection IP20/NEMA 0

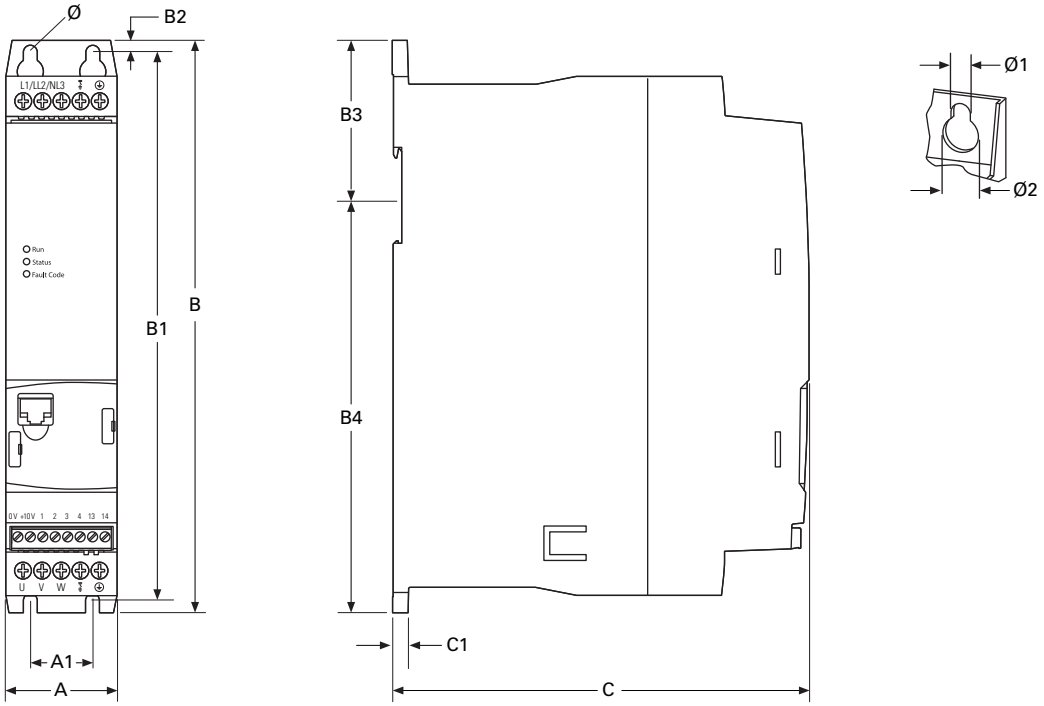

Frame Size	A	A1	B	B1	B2	B3	B4
FS1	1.77 (45.0)	0.98 (25.0)	9.09 (231.0)	8.66 (220.0)	0.20 (5.1)	2.52 (64.0)	6.54 (166.1)
FS2	3.54 (90.0)	1.97 (50.0)	9.09 (231.0)	8.66 (220.0)	0.20 (5.1)	2.52 (64.0)	6.54 (166.1)

Frame Size	C	C1	Ø1	Ø2	Weight lbs (kg)
FS1	6.65 (169.0)	0.26 (6.6)	0.20 (5.1)	0.39 (10.0)	2.29 (1.04)
FS2	6.65 (169.0)	0.26 (6.6)	0.20 (5.1)	0.39 (10.0)	3.70 (1.68)

PowerXL DC1 Series Drives

Contents

Description	*Page*
PowerXL DC1 Series Drives	
Catalog Number Selection	**V6-T2-16**
Product Selection	**V6-T2-17**
Accessories	**V6-T2-19**
Technical Data and Specifications	**V6-T2-21**
Dimensions	**V6-T2-23**

Product Description

Eaton's PowerXL® DC1 variable frequency drives are the next generation of drives specifically engineered for today's machinery applications.

The DC1 is compact with only 14 basic parameters, SmartWire-DT® and EtherNet/IP connectivity, and outstanding ease of mounting and installation. The newest version adds support for sensorless vector control and permanent magnet motor compatibility. The DC1 is perfect for quick commissioning and is ideal for panel builders. This drive supports single-phase motor applications, and detachable terminal blocks make control wiring much easier.

Models rated at 480 volts, three-phase, 50/60 Hz are available in sizes ranging from 1 to 30 hp. Models rated at 240 volts, single- or three-phase, 50/60 Hz are available in sizes ranging from 0.5 to 15 hp. Models rated at 115 volts, single-phase, 50/60 Hz are available in the 0.5 to 3 hp size range.

Features

- Compact, space-saving design
- Rugged and reliable—175% for 2 s, 50 °C rated
- DIN rail and screw mountable (FS1 and FS2)
- Side-by-side installation
- Industry-leading efficiency delivers energy savings to the customer
- Optional integrated EMC filters make the unit suitable for commercial and industrial networks
- Brake chopper as standard in frames 2 and higher
- Temperature-controlled fan
- RS-485/Modbus® and CANopen™ as standard
- PI controller as standard
- SmartWire capability
- Dual EtherNet/IP communication module
- Removable I/O terminal blocks
- Contactor style power wiring
- Designed for shaded-pole, single-phase motors and permanent split capacitor single-phase motors
- Sensorless vector control
- Permanent magnet motor compatibility

Standards and Certifications

Product

- Complies with EN61800-3 (2004)

EMC (At Default Settings)

- EMC Category C1, C2 and C3 at default settings (1 m, 5 m, 25 m)

Safety ①

- 61800-5-1
- EN 60529
- CE
- UL
- cUL
- UkrSepro
- c-Tick
- RoHS compliant

Note

① See unit nameplate for more detailed approvals.

Catalog Number Selection

DC1 Series Adjustable Frequency AC Drives

DC1 - 1 2 4D1 F N - A 20 N

Device Series
DC1 = Variable frequency drive, compact, Series 1
(**D** = Drives, **C** = Compact, **1** = Series 1)

Connection in Power Section
1 = Single-phase mains connection/three-phase motor connection
3 = Three-phase mains connection/three-phase motor connection
S = Single-phase mains connection/single-phase motor connection

Mains Voltage Category
1 = 110 V (110–115 V ±10%)
2 = 230 V (200–240 V ±10%)
4 = 480 V (380–480 V ±10%)
D = 110 V input/230 V output (voltage doubler)

Rated Operational Current
Examples—
2D2 = 2.2 A
4D1 = 4.1 A
024 = 24 A

EMC (Radio Interference Suppression Filter)
N = No internal RFI filter
F = Internal RFI filter

Brake Chopper
N = No internal brake chopper
B = Brake chopper

Display Unit (Display)
A = LED display

Degree of Protection
20 = IP20/NEMA 0
66 = IP66/NEMA 4/4X
6S = IP66 with disconnect/NEMA 4/4X

Type
N = Standard basic device
CE1 = Enhanced device

Product Selection

IP20

DC1 Series IP20 Enclosure Drives ①

hp ②	kW	Volts	100% Continuous Current In (A)	Frame Size ③	Catalog Number
0.5	0.37	115 V single-phase in/ ④ 115 V single-phase out	7	1	**DC1-S17D0NN-A20N**
0.75	0.55		10.5	2	**DC1-S1011NB-A20N**
0.5	0.37	200–240 V single-phase in/ ④ 200–240 V single-phase out	4.3	1	**DC1-S24D3NN-A20N** ⑤
1	0.75		7	1	**DC1-S27D0NN-A20N** ⑤
1.5	1.1		10	2	**DC1-S2011NB-A20N** ⑤
0.5	0.37	115 V single-phase in/ 230 V three-phase out	2.3	1	**DC1-1D2D3NN-A20CE1**
1	0.75		4.3	1	**DC1-1D4D3NN-A20CE1**
1.5	1.1		5.8	2	**DC1-1D5D8NB-A20CE1**
0.5	0.37	200–240 V single-phase in/ 230 V three-phase out	2.3	1	**DC1-122D3NN-A20CE1** ⑤
1	0.75		4.3	1	**DC1-124D3NN-A20CE1** ⑤
2	1.5		7	1	**DC1-127D0NN-A20CE1** ⑤
2	1.5		7	2	**DC1-127D0NB-A20CE1** ⑤
3	2.2		10.5	2	**DC1-12011NB-A20CE1** ⑤
5	4		15	3	**DC1-12015NB-A20CE1**
7.5	5.6		24	4	**DC1-32024NB-A20CE1** ⑤
0.5	0.37	200–240 V three-phase in/ 230 V three-phase out	2.3	1	**DC1-322D3NN-A20CE1**
1	0.75		4.3	1	**DC1-324D3NN-A20CE1**
2	1.5		7	1	**DC1-327D0NN-A20CE1**
2	1.5		7	2	**DC1-327D0NB-A20CE1** ⑤
3	2.2		10.5	2	**DC1-32011NB-A20CE1** ⑤
5	4		18	3	**DC1-32018NB-A20CE1** ⑤
10	7.5		30	4	**DC1-32030NB-A20CE1** ⑤
15	11		46	4	**DC1-32046NB-A20CE1** ⑤
1	0.75	380–480 V three-phase in/ 480 V three-phase out	2.2	1	**DC1-342D2NN-A20CE1** ⑤
2	1.5		4.1	1	**DC1-344D1NN-A20CE1** ⑤
2	1.5		4.1	2	**DC1-344D1NB-A20CE1** ⑤
3	2.2		5.8	2	**DC1-345D8NB-A20CE1** ⑤
5	4		9.5	2	**DC1-349D5NB-A20CE1** ⑤
7.5	5.5		14	3	**DC1-34014NB-A20CE1** ⑤
10	7.5		18	3	**DC1-34018NB-A20CE1** ⑤
15	11		24	3	**DC1-34024NB-A20CE1** ⑤
20	15		30	4	**DC1-34030NB-A20CE1** ⑤
25	18.5		39	4	**DC1-34039FB-A20N** ⑤
30	22		46	4	**DC1-34046FB-A20N** ⑤

Notes

① These are constant torque/high overload rated drives.
② For all applications, select the unit such that the motor current is less than or equal to the rated continuous output current.
③ Brake chopper circuit available as standard in frames 2, 3 and 4.
④ Only for use with shaded pole or split capacitor single-phase motors.
⑤ RFI version available. Substitute with DC1-*****F*-**** for this option.

IP66 NEMA 4/4X Interior DC1 Drive

The IP66 version of the DC1 is a unique solution to allow for mounting the drive outside of a control panel or next to a motor for distributed control.

"-A66…" Option

This version comes with the keypad that is similar to that of IP20 version. There are no additional cover controls to address security concerns.

"-A6S…" Option

This version has an integrated potentiometer, a forward/off/reverse switch and a disconnect switch with lock-off capability with the standard keypad. This allows for reduced labor and materials when compared to a IP20 solution in separate enclosure.

IP66

IP66S

DC1 Series IP66 Enclosure Drives ①

hp ②	kW	Volts	100% Continuous Current In (A)	Frame Size ③	Catalog Number
0.5	0.37	115 V single-phase in/ 115 V single-phase out	7	1	**DC1-S17D0NN-A6SN** ④
0.75	0.55		10.5	2	**DC1-S1011NB-A6SN** ④
0.5	0.37	200–240 V single-phase in/ 200–240 V single-phase out	4.3	1	**DC1-S24D3NN-A6SN** ④⑤
1	0.75		7	1	**DC1-S27D0NN-A6SN** ④⑤
1.5	1.1		10	2	**DC1-S2011NB-A6SN** ④⑤
0.5	0.37	115 V single-phase in/ 230 V three-phase out	2.3	1	**DC1-1D2D3NN-AS6CE1** ④
1	0.75		4.3	1	**DC1-1D4D3NN-AS6CE1** ④
1.5	1.1		5.8	2	**DC1-1D5D8NB-AS6CE1** ④
0.5	0.37	200–240 V single-phase in/ 230 V three-phase out	2.3	1	**DC1-122D3NN-AS6CE1** ④⑤
1	0.75		4.3	1	**DC1-124D3NN-AS6CE1** ④⑤
2	1.5		7	1	**DC1-127D0NN-AS6CE1** ④⑤
2	1.5		7	2	**DC1-127D0NB-AS6CE1** ④⑤
3	2.2		10.5	2	**DC1-12011NB-AS6CE1** ④⑤
5	4		15	3	**DC1-12015NB-AS6CE1** ④
0.5	0.37	200–240 V three-phase in/ 230 V three-phase out	2.3	1	**DC1-322D3NN-AS6CE1** ④
1	0.75		4.3	1	**DC1-324D3NN-AS6CE1** ④
2	1.5		7	1	**DC1-327D0NN-AS6CE1** ④
2	1.5		7	2	**DC1-327D0NB-AS6CE1** ④⑤
3	2.2		10.5	2	**DC1-32011NB-AS6CE1** ④⑤
5	4		18	3	**DC1-32018NB-AS6CE1** ④⑤
1	0.75	380–480 V three-phase in/ 460 V three-phase out	2.2	1	**DC1-342D2NN-AS6CE1** ④⑤
2	1.5		4.1	1	**DC1-344D1NN-AS6CE1** ④⑤
2	1.5		4.1	2	**DC1-344D1NB-AS6CE1** ④⑤
3	2.2		5.8	2	**DC1-345D8NB-AS6CE1** ④⑤
5	4		9.5	2	**DC1-349D5NB-AS6CE1** ④⑤
7.5	5.5		14	3	**DC1-34014NB-AS6CE1** ④⑤
10	7.5		18	3	**DC1-34018NB-AS6CE1** ④⑤

Notes

① These are constant torque/high overload rated drives.
② For all applications, select the unit such that the motor current is less than or equal to the rated continuous output current.
③ Brake chopper circuit available as standard in frames 2, 3 and 4.
④ Non-disconnect version available. Substitute with **-A66…**.
⑤ RFI version available. Substitute with DC1-*****F*-**** for this option.

Accessories

DC1 Series

PC Communication Kit and Copy/Paste Module

Description	Catalog Number
Bluetooth copy/paste communication stick	**DX-COM-STICK2**
USB to RJ45 panel mount kit	**DX-COM-PCKIT**
USB to RJ45 PC Tool cable	**DX-CBL-PC-3M0**

Encoder Feedback Plug-In Option Module and Miscellaneous Cards

Description	Catalog Number
Local control/test option card	**DXC-EXT-LOCSIM**
HVACO drive running and tripped relay output card	**DXC-EXT-2RO1AO**
Dual relay output card	**DXC-EXT-2RO**
110 V logic input card	**DXC-EXT-IO110**
230 V logic input card	**DXC-EXT-IO230**

Remote Keypad

Description	Catalog Number
LED remote keypad—7-segment display, IP54 rated	**DX-KEY-LED2** ①
OLED remote keypad—full text display, multi-line text, multi-language, IP54 hand/auto buttons	**DX-KEY-OLED** ①

Brake Resistor (FR2 and FR3)

Description	Catalog Number
DC1, DA1 internal mount 200 W, 100 R	**DX-BR3-100**

Extension Cables and Data Cable Splitter

Description	Catalog Number
RJ45 communication cable w/terminating resistor	**EASY-NT-R**
RS-485 data cable, RJ45, 0.5 m	**DX-CBL-RJ45-0M5**
RS-485 data cable, RJ45, 1.0 m	**DX-CBL-RJ45-1M0**
RS-485 data cable, RJ45, 3.0 m	**DX-CBL-RJ45-3M0**
RS-485 three-way data cable splitter, RJ45	**DX-SPL-RJ45-3SL**
RS-485 data cable splitter, RJ45, (1 connector to 2 socket)	**DX-SPL-RJ45-2SL1PL**

Communication Modules

Description	Catalog Number
SmartWire-DT interface for DE1 and DC1 IP20	**DX-NET-SWD3**
Dual EtherNet/IP interface for DE1 and DC1 IP20	**DX-NET-ETHERNET2-2**

Optional Communication Modules

Description	Catalog Number
EtherNet/IP plug-in interface module ②	**DX-NET-ETHERNET2-2**

Notes

① Includes 1 m RS-485 data cable.
② Available June 2016.

Line and Load Reactors

A line and load reactor is a three-phase inductance filter that can be placed on the line and load side of the AFD to help improve the harmonic performance of the system. Consult the factory for additional filtering options and further technical details.

DR1 Line Reactor

A line reactor helps to provide a moderate reduction in current harmonics similar to a DC choke. It also provides increased input protection for AFD and its semiconductors from line transients helping to extend the life of the AFD.

DR2 Output Reactor

An output filter is used to reduce the transient voltage (dV/dt) at the motor terminals. The output filter is recommended for cable lengths exceeding 100 ft (30 m) with a drive of 3 hp and above and for cable lengths of 33 ft (10 m) with a drive of 2 hp and below.

Line and Load Reactors—Catalog Number Selection

D R1 – 2 2D0 – 0 5

Basic Naming
D = Drive

Device Series
R1 = Line side reactor
R2 = Load side reactor

Input/Output Voltage
2 = 230 V
4 = 480 V

Current Rating
Examples:
2D0 = 2.0 A
4D0 = 4.0 A
8D0 = 8.0 A
012 = 12 A

Environment Rating
0 = Open
1 = NEMA 1

Impedance
3 = 3%
5 = 5%

Line and Load Reactors—230 V

	Open				NEMA 1			
	Load Reactor		Line Reactor		Load Reactor		Line Reactor	
hp (CT)	3%	5%	3%	5%	3%	5%	3%	5%
0.5	DR2-22D0-03	DR2-22D0-05	DR1-22D2-03	DR1-22D2-05	DR2-22D0-13	DR2-22D0-15	DR1-22D2-13	DR1-22D2-15
1	DR2-24D0-03	DR2-28D0-05	DR1-24D2-03	DR1-24D2-05	DR2-24D0-13	DR2-28D0-15	DR1-24D2-13	DR1-24D2-15
1.5	DR2-28D0-03	DR2-28D0-05	DR1-26D0-03	DR1-26D0-05	DR2-28D0-13	DR2-28D0-15	DR1-26D0-13	DR1-26D0-15
2	DR2-28D0-03	DR2-28D0-05	DR1-26D8-03	DR1-26D8-05	DR2-28D0-13	DR2-28D0-15	DR1-26D8-13	DR1-26D8-15
3	DR2-2012-03	DR2-2012-05	DR1-29D6-03	DR1-29D6-05	DR2-2012-13	DR2-2012-15	DR1-29D6-13	DR1-29D6-15
5	DR2-2018-03	DR2-2018-05	DR1-2015-03	DR1-2015-05	DR2-2018-13	DR2-2018-15	DR1-2015-13	DR1-2015-15
7.5	DR2-2025-03	DR2-2025-05	DR1-2022-03	DR1-2022-05	DR2-2025-13	DR2-2025-15	DR1-2022-13	DR1-2022-15
10	DR2-2035-03	DR2-2035-05	DR1-2028-03	DR1-2028-05	DR2-2035-13	DR2-2035-15	DR1-2028-13	DR1-2028-15
15	DR2-2045-03	DR2-2045-05	DR1-2042-03	DR1-2042-05	DR2-2045-13	DR2-2045-15	DR1-2042-13	DR1-2042-15

Line and Load Reactors—480 V

	Open				NEMA 1			
	Load Reactor		Line Reactor		Load Reactor		Line Reactor	
hp (CT)	3%	5%	3%	5%	3%	5%	3%	5%
1	DR2-42D0-03	DR2-42D0-05	DR1-42D1-03	DR1-42D1-05	DR2-42D0-13	DR2-42D0-15	DR1-42D1-13	DR1-42D1-15
2	DR2-44D0-03	DR2-44D0-05	DR1-43D4-03	DR1-43D4-05	DR2-44D0-13	DR2-44D0-15	DR1-43D4-13	DR1-43D4-15
3	DR2-48D0-03	DR2-48D0-05	DR1-44D8-03	DR1-44D8-05	DR2-48D0-13	DR2-48D0-15	DR1-44D8-13	DR1-44D8-15
5	DR2-48D0-03	DR2-48D0-05	DR1-47D6-03	DR1-47D6-05	DR2-48D0-13	DR2-48D0-15	DR1-47D6-13	DR1-47D6-15
7.5	DR2-4012-03	DR2-4012-05	DR1-4011-03	DR1-4011-05	DR2-4012-13	DR2-4012-15	DR1-4011-13	DR1-4011-15
10	DR2-4018-03	DR2-4018-05	DR1-4014-03	DR1-4014-05	DR2-4018-13	DR2-4018-15	DR1-4014-13	DR1-4014-15
15	DR2-4025-03	DR2-4025-05	DR1-4021-03	DR1-4021-05	DR2-4025-13	DR2-4025-15	DR1-4021-13	DR1-4021-15
20	DR2-4025-03	DR2-4025-05	DR1-4027-03	DR1-4027-05	DR2-4025-13	DR2-4025-15	DR1-4027-13	DR1-4027-15
25	DR2-4035-03	DR2-4035-05	DR1-4034-03	DR1-4034-05	DR2-4035-13	DR2-4035-15	DR1-4034-13	DR1-4034-15
30	DR2-4045-03	DR2-4045-05	DR1-4040-03	DR1-4040-05	DR2-4045-13	DR2-4045-15	DR1-4040-13	DR1-4040-15

Technical Data and Specifications

DC1 Series

Ratings

PowerXL DC1 Basic Controller IP20 Standard Ratings

Description	Specification
Protections	
Overload protection	150% for 60s for every 600 seconds
Overvoltage protection	Yes
Undervoltage protection	Yes
Ground fault protection	Yes
Overtemperature protection	Yes
Motor overload protection	Yes
Motor stall protection	Yes
Short-circuit withstand rating	100 kAIC with Type J fuses

Programmable Parameters

Description
Built-in Help card
14 Standard operation parameters
Reference scaling
Programmable start and stop functions
DC-brake at start and stop
Programmable V/Hz curve
Adjustable switching frequency
Autorestart function after fault
Protections and supervisions
Power section fault indication
External fault
Fieldbus communication
Second deceleration time
Analog input range selection, signal scaling and filtering
PI controller
Skip frequencies

Specifications

PowerXL DC1 Series Drives

Description	Specification
Input Ratings	
Input voltage (V_{in})	±10%
Input frequency (f_{in})	50/60 Hz (variation up to 48–62 Hz)
Connection to power	Maximum of one time every 30 seconds
Output Ratings	
Output voltage	0 to V_{in} ①
Continuous output current	Continuous rated current I_N at ambient temperature max. 122 °F (50 °C), 150% for 60 seconds, 175% for 2 seconds
Output frequency	0 to 500 Hz
Frequency resolution	0.1 Hz
Initial output current (I_H)	175% for 2s for every 20 seconds Torque depends on motor
Control Characteristics	
Operation mode	U/f control, slip compensation
Switching frequency	4 to 32 kHz
Voltage reference	10 Vdc (max. 10 mA)
Field weakening point	0 to 500 Hz
Acceleration time	0.1 to 600 seconds
Deceleration time	0.1 to 600 seconds
Brake Resistor (Minimum Values) ②	
230 V Series	FS2 and FS3 47 ohms
400 V Series	FS2 100 ohms, FS3 47 ohms
Ambient Conditions	
Ambient operating temperature	+14 °F (–10 °C), no frost to +122 °F (+50 °C): Rated loadability I_N IP20—NEMA 0
Storage temperature	–40 °F (–40 °C) to +140 °F (+60 °C)
Relative humidity	0 to 95% RH, noncondensing, non-corrosive, no dripping water
Enclosure class	IP20 (FS1–FS4)

Notes

① Exception: 115 V single-phase in, 230 V three-phase out.

② Only FS2, FS3 and FS4 drives are equipped with brake chopper circuit.

Standards—DC1 Series

I/O Specifications

- Digital inputs DI1–DI4 are programmable
- Digital, relay and analog outputs are programmable

Includes:

- Four inputs (two digital and two digital/analog)
- Analog inputs
  - 4–20 mA
  - 0–10 V
- One output (analog or digital)
- One relay output
- RS-485 interface

Reliability

- Pretested components
- Computerized testing
- Final test with full load
- Conformal-coated boards
- Eaton's Electrical Services & Systems: national network of AF drive specialists

DC1 Series I/O Interface

Terminal		Signal	Factory Preset	Description
1	+24 Vdc	Control voltage for DI1–DI4	—	Maximum load 100 mA Reference potential V
2	DI1	Digital Input 1	Start Enable FWD	8 to +30 V (High, R_1 > 6 kΩ)
3	DI2	Digital Input 2	Start Enable REV	8 to +30 V (High, R_1 > 6 kΩ)
4	DI3	Digital Input 3	Fixed frequency FF1	Digital: 8–30 V (high)
	AI2	Analog Input 2	Fixed frequency FF1	Analog: 0 to +10 V (R_i >72 kΩ) 0/4–20 mA (R_B = 500 Ω) Can be switched with parameter P-16
5	+10 Vdc	Reference voltage, Output (+10 V)	—	Maximum load 10 mA Reference potential 0 V
6	AI1	Analog Input 1	Frequency reference value (fixed frequency)	Analog: 0 to +10 V (R_i >72 kΩ) 0/4–20 mA (R_B = 500 Ω) Can be switched with parameter P-16
	DI4	Digital Input 5	Frequency reference value (fixed frequency)	Digital: 8–30 V (high)
7	0 V	Reference potential	—	0 V = connection terminal 9
8	AO1	Analog Output 1	Output frequency	Analog: 0 to +10 V, maximum 20 mA Can be switched with parameter P-25
	DO1	Digital Output 1	Output frequency	Digital: 8 to +24 V
9	0 V	Reference potential	—	0 V connection terminal 7
10	K13	Relay 1, normally open contact	Active = RUN	Maximum switching load: 250 Vac/6 A or 30 Vdc/5 A
11	K14	Relay 1, normally open contact	Active = RUN	Maximum switching load: 250 Vac/6 A or 30 Vdc/5 A

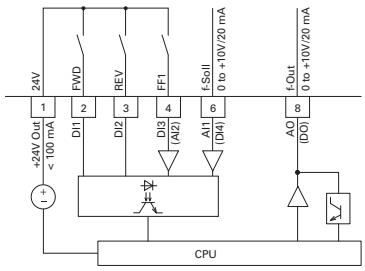

Dimensions

Approximate Dimensions in Inches (mm)

DC1, Sizes FS1–FS4, Degree of Protection IP20/NEMA 0

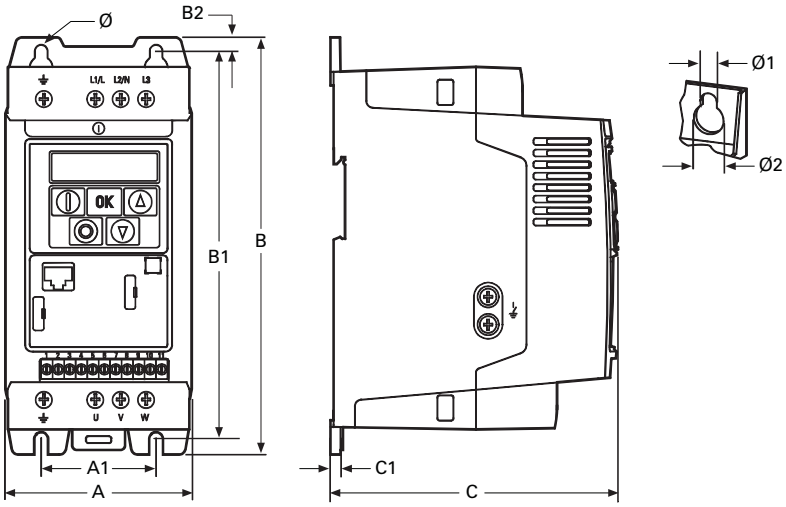

Frame Size	A	A1	B	B1	B2	C	C1	Ø1	Ø2	Weight lbs (kg)
FS1	3.19 (81)	1.97 (50)	7.24 (184)	6.69 (170)	0.28 (7)	4.88 (124)	0.16 (4)	0.24 (6)	0.47 (12)	2.43 (1.1)
FS2	4.21 (107)	2.95 (75)	9.09 (231)	8.46 (215)	0.31 (8)	5.98 (152)	0.20 (5)	0.24 (6)	0.47 (12)	5.73 (2.6)
FS3	5.08 (129)	3.94 (100)	10.75 (273)	10.04 (255)	0.33 (8.5)	6.89 (175)	0.20 (5)	0.24 (6)	0.47 (12)	8.82 (4.0)
FS4	6.81 (173)	4.92 (125)	16.48 (418.5)	15.75 (400)	0.41 (10.5)	8.31 (211)	0.16 (4)	0.31 (8)	0.57 (14.5)	18.52 (8.4)

DC1, Sizes FS1–FS3, Degree of Protection IP66/NEMA 4

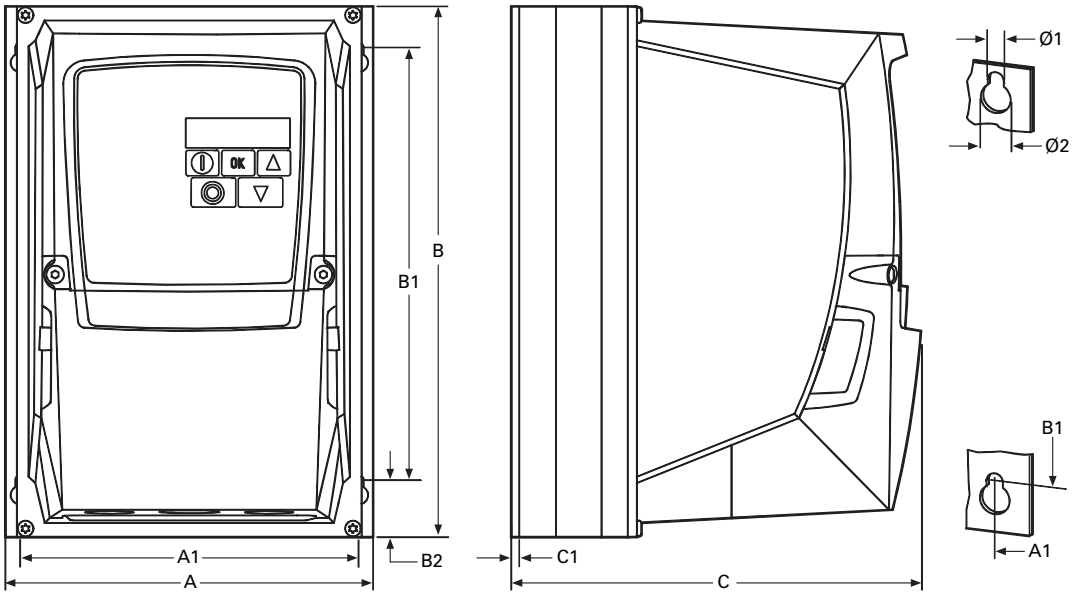

Frame Size	A	A1	B	B1	B2	C	C1	Ø1	Ø2	Weight lbs (kg)
FS1	6.34 (161)	5.85 (148.5)	9.13 (232)	7.44 (189)	0.98 (25)	7.24 (184)	0.14 (3.5)	0.16 (4)	0.31 (8)	6.17 (2.8)
FS2	7.40 (188)	6.93 (176)	10.12 (257)	7.87 (200)	1.10 (28)	7.56 (192)	0.14 (3.5)	0.17 (4.2)	0.33 (8.5)	11.02 (5.0)
FS3	8.27 (210)	7.78 (197.5)	12.20 (310)	9.92 (252)	1.30 (33)	9.45 (240)	0.14 (3.5)	0.17 (4.2)	0.33 (8.5)	18.08 (8.2)

Approximate Dimensions in Inches (mm)

DC1, Sizes FS1–FS3, Degree of Protection IP66/NEMA 4, with Local Controls

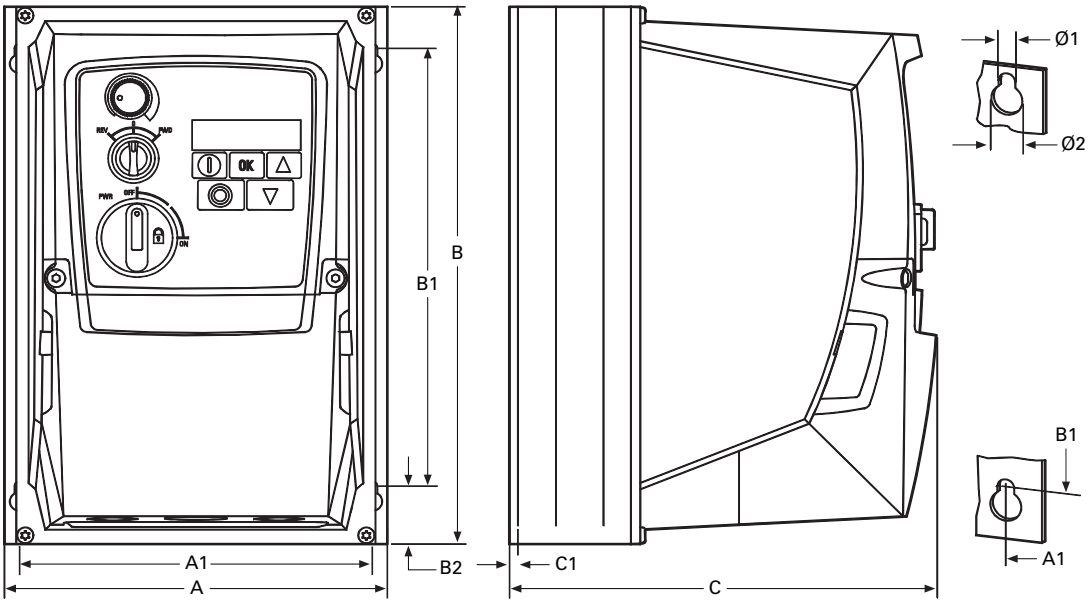

Frame Size	A	A1	B	B1	B2	C	C1	Ø1	Ø2	Weight lbs (kg)
FS1	6.34 (161)	5.85 (148.5)	9.13 (232)	7.44 (189)	0.98 (25)	7.24 (184)	0.14 (3.5)	0.16 (4)	0.31 (8)	6.17 (2.8)
FS2	7.40 (188)	6.93 (176)	10.12 (257)	7.87 (200)	1.10 (28)	7.56 (192)	0.14 (3.5)	0.17 (4.2)	0.33 (8.5)	11.02 (5.0)
FS3	8.27 (210)	7.78 (197.5)	12.20 (310)	9.92 (252)	1.30 (33)	9.45 (240)	0.14 (3.5)	0.17 (4.2)	0.33 (8.5)	18.08 (8.2)

PowerXL DA1 Series Drives

Contents

Description	*Page*
PowerXL DA1 Series Drives	
Catalog Number Selection	**V6-T2-26**
Product Selection	**V6-T2-27**
Accessories	**V6-T2-29**
Technical Data and Specifications	**V6-T2-32**
Dimensions	**V6-T2-34**

Product Description

Eaton's PowerXL® DA1 variable frequency drives are the next generation of drives specifically engineered for today's machinery applications.

DA1 is the perfect match for demanding OEM applications. High-performance processor, safe torque off, multiple fieldbus protocols including SmartWire-DT, sensorless vector control and the possibility to operate permanent magnet motors are sure to leave a lasting impression.

Models rated at 480 volts, three-phase, 50/60 Hz are available in sizes ranging from 1 to 15 hp. Models rated at 240 volts, single- or three-phase, 50/60 Hz are available in sizes ranging from 0.5 to 7.5 hp. Models rated at 575 volts, three-phase, 50/60 Hz are available in sizes ranging from 1 to 20 hp.

Features

- Compact, space-saving design
- Rugged and reliable—200% for 4s 50 °C rated
- DIN rail and screw mountable (FS1 and FS2)
- Side-by-side installation
- Industry-leading efficiency delivers energy savings to the customer
- Integrated EMC filters make the unit suitable for commercial and industrial networks
- Communication cards that integrate into the drive—
  - EtherNet/IP
  - DeviceNet
  - PROFIBUS-DP
  - EtherCAT
  - PROFINET
  - Modbus TCP
  - BACnet
- Brake chopper as standard
- Temperature-controlled fan
- RS-485/Modbus® and CANopen™ as standard
- PID controller as standard
- SmartWire capability
- Removable I/O terminal blocks
- Contactor style power wiring
- 200% torque at zero speed
- Designed to run surface mounted (SPM) and rotor in-built (IPM) permanent magnet motors
- PLC programming
- Closed loop
- Conformal coated boards

Standards and Certifications

Product

- Complies with EN61800-3 (2004)

EMC (At Default Settings)

- EMC Category C1, C2 and C3 at default settings (1 m, 5 m, 25 m)

Safety ①

- 61800-5-1
- EN 60529
- CE
- UL
- cUL
- DNV
- UkrSepro
- c-Tick
- RoHS compliant

Note

① See unit nameplate for more detailed approvals.

Catalog Number Selection

DA1 Series Adjustable Frequency AC Drives

DA1 - 1 2 4D1 F B - A 20 C

Device Series
DA1 = Variable frequency drive, compact, Series 1
(**D** = Drives, **A** = Advanced, **1** = Series 1)

Connection in Power Section
1 = Single-phase mains connection/three-phase motor connection
3 = Three-phase mains connection/three-phase motor connection

Mains Voltage Category
2 = 230 V (200–240 V ±10%)
4 = 400 V (380–480 V ±10%)
5 = 575 V (500–600 V ±10%)

Rated Operational Current
Examples—
2D2 = 2.2 A
4D1 = 4.1 A
024 = 24 A

EMC (Radio Interference Suppression Filter)
F = Internal RFI filter

Brake Chopper
B = Brake chopper

Display Unit (Display)
A = LED display (IP20 only)
B = OLED display (IP66 only)

Degree of Protection
20 = IP20/NEMA 0
66 = IP66/NEMA 4/4X
6S = IP66 with disconnect/NEMA 4/4X

Type
C = Coated printed circuit boards

Product Selection

IP20

DA1 Series IP20 Enclosure Drives ①

hp ②	kW	Volts	100% Continuous Current In (A)	Frame Size ③	Catalog Number
1	0.75	200–240 V single-phase in/ 230 V three-phase out	4.3	2	**DA1-124D3FB-A20C**
2	1.5		7	2	**DA1-127D0FB-A20C**
3	2.2		10.5	2	**DA1-12011FB-A20C**
1	0.75	200–240 V three-phase in/ 230 V three-phase out	4.3	2	**DA1-324D3FB-A20C**
2	1.5		7	2	**DA1-327D0FB-A20C**
3	2.2		10.5	2	**DA1-32011FB-A20C**
5	4		18	3	**DA1-32018FB-A20C**
7.5	5.5		24	3	**DA1-32024FB-A20C**
1	0.75	380–480 V three-phase in/ 460 V three-phase out	2.2	2	**DA1-342D2FB-A20C**
2	1.5		4.1	2	**DA1-344D1FB-A20C**
3	2.2		5.8	2	**DA1-345D8FB-A20C**
5	4		9.5	2	**DA1-349D5FB-A20C**
7.5	5.5		14	3	**DA1-34014FB-A20C**
10	7.5		18	3	**DA1-34018FB-A20C**
15	11		24	3	**DA1-34024FB-A20C**
1	0.75	500–600 V three-phase in/ 575 V three-phase out	2.1	2	**DA1-352D1NB-A20C**
2	4.5		3.1	2	**DA1-353D1NB-A20C**
3	2.2		4.1	2	**DA1-354D1NB-A20C**
5	4		6.5	2	**DA1-356D5NB-A20C**
7.5	5.5		9	2	**DA1-359D0NB-A20C**
10	7.5		12	3	**DA1-35012NB-A20C**
15	11		17	3	**DA1-35017NB-A20C**
20	15		22	3	**DA1-35022NB-A20C**

Notes

① These are constant torque/high overload rated drives.
② For all applications, select the unit such that the motor current is less than or equal to the rated continuous output current.
③ Brake chopper circuit available as standard in frames 2 and 3.

IP66 NEMA 4/4X Interior DA1 Drive

The IP66 version of the DA1 is a unique solution to allow for mounting the drive outside of a control panel or next to a motor for distributed control.

"-B66C" Option

This version comes with the OLED keypad. There are no additional cover controls to address security concerns.

"-B6SC" Option

This version has an integrated potentiometer, a forward/off/reverse switch and a disconnect switch with lock-off capability with the OLED keypad. This allows for reduced labor and materials when compared to a IP20 solution in separate enclosure.

IP66

IP66S

DA1 Series IP66 Enclosure Drives ①

IP66 NEMA 4/4X Interior DA1 Drive

hp ②	kW	Volts	100% Continuous Current In (A)	Frame Size ③	Catalog Number
1	0.75	200–240 V single-phase in/ 230 V three-phase out	4.3	2	**DA1-124D3FB-B6SC** ④
2	1.5		7	2	**DA1-127D0FB-B6SC** ④
3	2.2		10.5	2	**DA1-12011FB-B6SC** ④
1	0.75	200–240 V three-phase in/ 230 V three-phase out	4.3	2	**DA1-324D3FB-B6SC** ④
2	1.5		7	2	**DA1-327D0FB-B6SC** ④
3	2.2		10.5	2	**DA1-32011FB-B6SC** ④
5	4		18	3	**DA1-32018FB-B6SC** ④
1	0.75	380–480 V three-phase in/ 460 V three-phase out	2.2	2	**DA1-342D2FB-B6SC** ④
2	1.5		4.1	2	**DA1-344D1FB-B6SC** ④
3	2.2		5.8	2	**DA1-345D8FB-B6SC** ④
5	4		9.5	2	**DA1-349D5FB-B6SC** ④
7.5	5.5		14	3	**DA1-34014FB-B6SC** ④
10	7.5		18	3	**DA1-34018FB-B6SC** ④
1	0.75	500–600 V three-phase in/ 575 V three-phase out	2.1	2	**DA1-352D1NB-B6SC**
2	4.5		3.1	2	**DA1-353D1NB-B6SC**
3	2.2		4.1	2	**DA1-354D1NB-B6SC**
5	4		6.5	2	**DA1-356D5NB-B6SC**
7.5	5.5		9	2	**DA1-359D0NB-B6SC**
10	7.5		12	3	**DA1-35012NB-B6SC**
15	11		17	3	**DA1-35017NB-B6SC**

Notes

① These are constant torque/high overload rated drives.
② For all applications, select the unit such that the motor current is less than or equal to the rated continuous output current.
③ Brake chopper circuit available as standard in frames 2 and 3.
④ Non-disconnect version available. Substitute with **-B66C**.

Accessories

DA1 Series

PC Communication Kit and Copy/Paste Module

Description	Catalog Number
Bluetooth copy/paste communication stick	**DX-COM-STICK2**
USB to RJ45 panel mount kit	**DX-COM-PCKIT**
USB to RJ45 PC Tool cable	**DX-CBL-PC-3M0**

Optional Communication Modules

Description	Catalog Number
DeviceNet plug-in interface module	**DX-NET-DEVICENET**
PROFIBUS-DP plug-in interface module	**DX-NET-PROFIBUS**
EtherNet/IP plug-in interface module	**DX-NET-ETHERNET-2**
EtherCAT plug-in interface module	**DX-NET-ETHERCAT-2**
PROFINET plug-in interface module	**DX-NET-PROFINET-2**
Modbus TCP plug-in interface module	**DX-NET-MODBUSTCP-2**
BACnet/IP plug-in interface module	**DX-NET-BACNETIP-2**

Encoder Feedback Plug-In Option Module and Miscellaneous Cards

Description	Catalog Number
Expansion card: 3 relay outputs	**DXA-EXT-3RO**
Encoder feedback plug-in option module	**DXA-EXT-ENCOD**
Expansion card: 3 digital inputs and 1 relay output	**DXA-EXT-3DI1RO**

Remote Keypad

Description	Catalog Number
LED remote keypad—7-segment display, IP54 rated	**DX-KEY-LED2** ①
OLED remote keypad—full text display, multi-line text, multi-language, IP54, hand/auto	**DX-KEY-OLED** ①

Extension Cables and Data Cable Splitter

Description	Catalog Number
RJ45 communication cable w/terminating resistor	**EASY-NT-R**
RS-485 data cable, RJ45, 0.5 m	**DX-CBL-RJ45-0M5**
RS-485 data cable, RJ45, 1.0 m	**DX-CBL-RJ45-1M0**
RS-485 data cable, RJ45, 3.0 m	**DX-CBL-RJ45-3M0**
RS-485 three-way data cable splitter, RJ45	**DX-SPL-RJ45-3SL**
RS-485 data cable splitter, RJ45, (1 connector to 2 socket)	**DX-SPL-RJ45-2SL1PL**

SmartWire Modules

Description	Catalog Number
SmartWire-DT interface for DA1 IP20	**DX-NET-SWD1**

Note

① Includes 1 m RS-485 data cable.

Line and Load Reactors

A line and load reactor is a three-phase inductance filter that can be placed on the line and load side of the AFD to help improve the harmonic performance of the system. Consult the factory for additional filtering options and further technical details.

DR1 Line Reactor

A line reactor helps to provide a moderate reduction in current harmonics similar to a DC choke. It also provides increased input protection for AFD and its semiconductors from line transients helping to extend the life of the AFD.

DR2 Output Reactor

An output filter is used to reduce the transient voltage (dV/dt) at the motor terminals. The output filter is recommended for cable lengths exceeding 100 ft (30 m) with a drive of 3 hp and above and for cable lengths of 33 ft (10 m) with a drive of 2 hp and below.

Line and Load Reactors—Catalog Number Selection

D R1 – 2 2D0 – 0 5

Basic Naming
D = Drive

Device Series
R1 = Line side reactor
R2 = Load side reactor

Input/Output Voltage
2 = 230 V
4 = 460 V
5 = 575 V

Current Rating
Examples:
2D0 = 2.0 A
4D0 = 4.0 A
8D0 = 8.0 A
012 = 12 A

Environment Rating
0 = Open
1 = NEMA 1

Impedance
3 = 3%
5 = 5%

Line and Load Reactors—230 V

	Open				NEMA 1			
	Load Reactor		Line Reactor		Load Reactor		Line Reactor	
hp (CT)	3%	5%	3%	5%	3%	5%	3%	5%
1	DR2-24D0-03	DR2-28D0-05	DR1-24D2-03	DR1-24D2-05	DR2-24D0-13	DR2-28D0-15	DR1-24D2-13	DR1-24D2-15
2	DR2-28D0-03	DR2-28D0-05	DR1-26D8-03	DR1-26D8-05	DR2-28D0-13	DR2-28D0-15	DR1-26D8-13	DR1-26D8-15
3	DR2-2012-03	DR2-2012-05	DR1-29D6-03	DR1-29D6-05	DR2-2012-13	DR2-2012-15	DR1-29D6-13	DR1-29D6-15
5	DR2-2018-03	DR2-2018-05	DR1-2015-03	DR1-2015-05	DR2-2018-13	DR2-2018-15	DR1-2015-13	DR1-2015-15
7.5	DR2-2025-03	DR2-2025-05	DR1-2022-03	DR1-2022-05	DR2-2025-13	DR2-2025-15	DR1-2022-13	DR1-2022-15

Line and Load Reactors—480 V

	Open				NEMA 1			
	Load Reactor		Line Reactor		Load Reactor		Line Reactor	
hp (CT)	3%	5%	3%	5%	3%	5%	3%	5%
1	DR2-42D0-03	DR2-42D0-05	DR1-42D1-03	DR1-42D1-05	DR2-42D0-13	DR2-42D0-15	DR1-42D1-13	DR1-42D1-15
2	DR2-44D0-03	DR2-44D0-05	DR1-43D4-03	DR1-43D4-05	DR2-44D0-13	DR2-44D0-15	DR1-43D4-13	DR1-43D4-15
3	DR2-48D0-03	DR2-48D0-05	DR1-44D8-03	DR1-44D8-05	DR2-48D0-13	DR2-48D0-15	DR1-44D8-13	DR1-44D8-15
5	DR2-48D0-03	DR2-48D0-05	DR1-47D6-03	DR1-47D6-05	DR2-48D0-13	DR2-48D0-15	DR1-47D6-13	DR1-47D6-15
7.5	DR2-4012-03	DR2-4012-05	DR1-4011-03	DR1-4011-05	DR2-4012-13	DR2-4012-15	DR1-4011-13	DR1-4011-15
10	DR2-4018-03	DR2-4018-05	DR1-4014-03	DR1-4014-05	DR2-4018-13	DR2-4018-15	DR1-4014-13	DR1-4014-15
15	DR2-4025-03	DR2-4025-05	DR1-4021-03	DR1-4021-05	DR2-4025-13	DR2-4025-15	DR1-4021-13	DR1-4021-15

Line and Load Reactors—575 V

	Open				NEMA 1			
	Load Reactor		Line Reactor		Load Reactor		Line Reactor	
hp (CT)	3%	5%	3%	5%	3%	5%	3%	5%
1	DR2-52D0-03	DR2-52D0-05	DR1-51D7-03	DR1-51D7-05	DR2-52D0-13	DR2-52D0-15	DR1-51D7-13	DR1-51D7-15
2	DR2-54D0-03	DR2-54D0-05	DR1-52D7-03	DR1-52D7-05	DR2-54D0-13	DR2-54D0-15	DR1-52D7-13	DR1-52D7-15
3	DR2-54D0-03	DR2-54D0-05	DR1-53D9-03	DR1-53D9-05	DR2-54D0-13	DR2-54D0-15	DR1-53D9-13	DR1-53D9-15
5	DR2-58D0-03	DR2-58D0-05	DR1-56D1-03	DR1-56D1-05	DR2-58D0-13	DR2-58D0-15	DR1-56D1-13	DR1-56D1-15
7.5	DR2-58D0-03	DR2-58D0-05	DR1-59D0-03	DR1-59D0-05	DR2-58D0-13	DR2-58D0-15	DR1-59D0-13	DR1-59D0-15
10	DR2-5012-03	DR2-5012-05	DR1-5011-03	DR1-5011-05	DR2-5012-13	DR2-5012-15	DR1-5011-13	DR1-5011-15
15	DR2-5018-03	DR2-5018-05	DR1-5017-03	DR1-5017-05	DR2-5018-13	DR2-5018-15	DR1-5017-13	DR1-5017-15
20	DR2-5025-03	DR2-5025-05	DR1-5022-03	DR1-5022-05	DR2-5025-13	DR2-5025-15	DR1-5022-13	DR1-5022-15

Technical Data and Specifications

DA1 Series

Ratings

PowerXL DA1 Basic Controller IP20 Standard Ratings

Description	Specification
Protections	
Overload protection	150% for 60s for every 600 seconds
Overvoltage protection	Yes
Undervoltage protection	Yes
Ground fault protection	Yes
Overtemperature protection	Yes
Motor overload protection	Yes
Motor stall protection	Yes
Short-circuit withstand rating	100 kAIC with Type J fuses

Programmable Parameters

Description
Built-in Help card
14 Standard operation parameters
Reference scaling
Programmable start and stop functions
DC-brake at start and stop
Programmable V/Hz curve
Adjustable switching frequency
Autorestart function after fault
Protections and supervisions
Power section fault indication
External fault
Fieldbus communication
Safe torque off (STO) function
Analog input range selection, signal scaling and filtering
PI controller
Skip frequencies

Specifications

PowerXL DA1 Series Drives

Description	Specification
Input Ratings	
Input voltage (V_{in})	±10%
Input frequency (f_{in})	50/60 Hz (variation up to 48–62 Hz)
Connection to power	Maximum of one time every 30 seconds
Output Ratings	
Output voltage	0 to V_{in} ①
Continuous output current	Continuous rated current I_N at ambient temperature max. 122 °F (50 °C), 150% for 60 seconds, 200% for 4 seconds
Output frequency	0 to 500 Hz
Frequency resolution	0.1 Hz
Initial output current (I_H)	200% for 4s for every 40 seconds Torque depends on motor
Control Characteristics	
Operation mode	U/f control, slip compensation, sensorless vector control (SLV), vector control with feedback (CLV)
Switching frequency	4 to 32 kHz
Voltage reference	10 Vdc (max. 10 mA)
Field weakening point	0 to 500 Hz
Acceleration time	0.1 to 600 seconds
Deceleration time	0.1 to 600 seconds
Brake Resistor (Minimum Values) ②	
230 V Series	FS2 and FS3 15 ohms
400 V Series	FS2 33 ohms, FS3 22 ohms
Ambient Conditions	
Ambient operating temperature	+14 °F (–10 °C), no frost to +122 °F (+50 °C): Rated loadability I_N IP20—NEMA 0
Storage temperature	–40 °F (–40 °C) to +140 °F (+60 °C)
Relative humidity	0 to 95% RH, noncondensing, non-corrosive, no dripping water
Enclosure class	IP20 (FS2 and FS3)

Notes

① Exception: 115 V single-phase in, 230 V three-phase out.
② Only FS2 and FS3 drives are equipped with brake chopper circuit.

Standards—DA1 Series

I/O Specifications

- Digital inputs DI1–DI5 are programmable
- Digital, relay and analog outputs are programmable

Includes:

- Five inputs (three digital and two digital/analog)
- Analog inputs
  - 4–20 mA
  - 0–10 V
- Two outputs (analog or digital)
- Two relay outputs
- RS-485 interface

Reliability

- Pretested components
- Computerized testing
- Final test with full load
- Conformal-coated boards
- Eaton's Electrical Services & Systems: national network of AF drive specialists

DA1 Series I/O Interface

Terminal		Signal	Factory Preset	Description
1	+24 Vdc	Control voltage for DI1–DI5	—	Maximum load 100 mA Reference potential V
2	DI1	Digital Input 1	Start Enable FWD ①	8 to +30 V (High, R_1 > 6 kΩ)
3	DI2	Digital Input 2	Start Enable REV ①	8 to +30 V (High, R_1 > 6 kΩ)
4	DI3	Digital Input 3	Fixed frequency FF1/FF2 ①	8 to +30 V (High, R_1 > 6 kΩ)
5	+10 Vdc	Reference voltage, Output (+10 V)	—	Maximum load 10 mA Reference potential 0 V
6	AI1	Analog Input 1	Frequency reference value ①	Analog: 0 to +10 V (R_i >72 kΩ) 0/4–20 mA (R_i = 500 Ω) Can be switched with parameter P2-30
	DI4	Digital Input 5	Frequency reference value ①	Digital: 8–30 V (high)
7	0 V	Reference potential	—	0 V = connection terminal 9
8	AO1	Analog Output 1	Output frequency	Analog: 0 to +10 V, maximum 20 mA Can be switched with parameter P2-11
	DO1	Digital Output 1	Output frequency	Digital: 8–24 V
9	0 V	Reference potential	—	0 V connection terminal 7
10	DI4	Digital Input 4	Fixed frequency FF2 ①	Analog: 0 to +10 V (R_i >72 kΩ) 0/4–20 mA (R_i = 500 Ω) Can be switched with parameter P2-30
	AI2	Analog Input 2	Fixed frequency FF2 ①	Digital: 8–30 V (high)
11	AO2	Analog output 2	Output current ①	Analog: 0 to +10 V, maximum 20 mA Can be switched with parameter P2-11
	DO2	Digital output 2	Output current ①	Digital: 8–24 V
12	STO+	Safe Torque Off +	—	Enable = +24 V
13	STO-	Safe Torque Off –	—	Enable = 0 V
14	K11	Relay 1, changeover contact	Active = FAULT ①	Maximum switching load: 250 Vac/6 A or 30 Vdc/5 A
15	K14	Relay 1, changeover contact (N/O)	Active = FAULT ①	Maximum switching load: 250 Vac/6 A or 30 Vdc/5 A
16	K12	Relay 1, changeover contact (N/C)	Active = FAULT ①	Maximum switching load: 250 Vac/6 A or 30 Vdc/5 A
17	K23	Relay 2, N/O contact	Active = FAULT ①	Maximum switching load: 250 Vac/6 A or 30 Vdc/5 A
18	K24	Relay 2, N/C contact	Active = FAULT ①	Maximum switching load: 250 Vac/6 A or 30 Vdc/5 A

Note

① Programmable function.

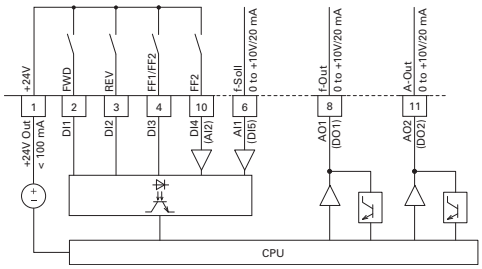

Dimensions

Approximate Dimensions in Inches (mm)

DA1, Sizes FS2 and FS3, Degree of Protection IP20/NEMA 0

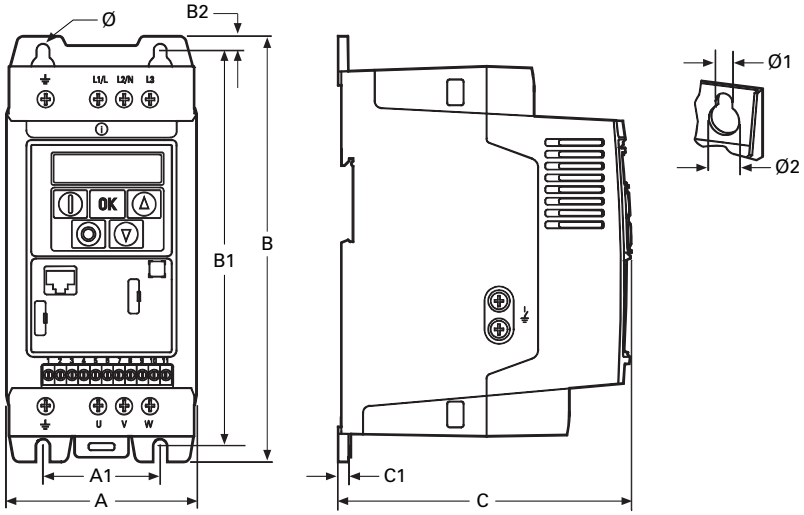

Frame Size	A	A1	B	B1	B2	C	C1	Ø1	Ø2	Weight lbs (kg)
FS2	4.21 (107.0)	2.95 (75.0)	9.09 (231.0)	8.46 (215.0)	0.31 (8.0)	7.32 (186.0)	0.20 (5.0)	0.24 (6.0)	0.47 (12.0)	3.97 (1.8)
FS3	5.16 (131.0)	3.94 (100.0)	10.75 (273.0)	10.04 (255.0)	0.33 (8.5)	8.03 (204.0)	0.20 (5.0)	0.24 (6.0)	0.47 (12.0)	7.72 (3.5)

DA1, Sizes FS2 and FS3, Degree of Protection IP66/NEMA 4

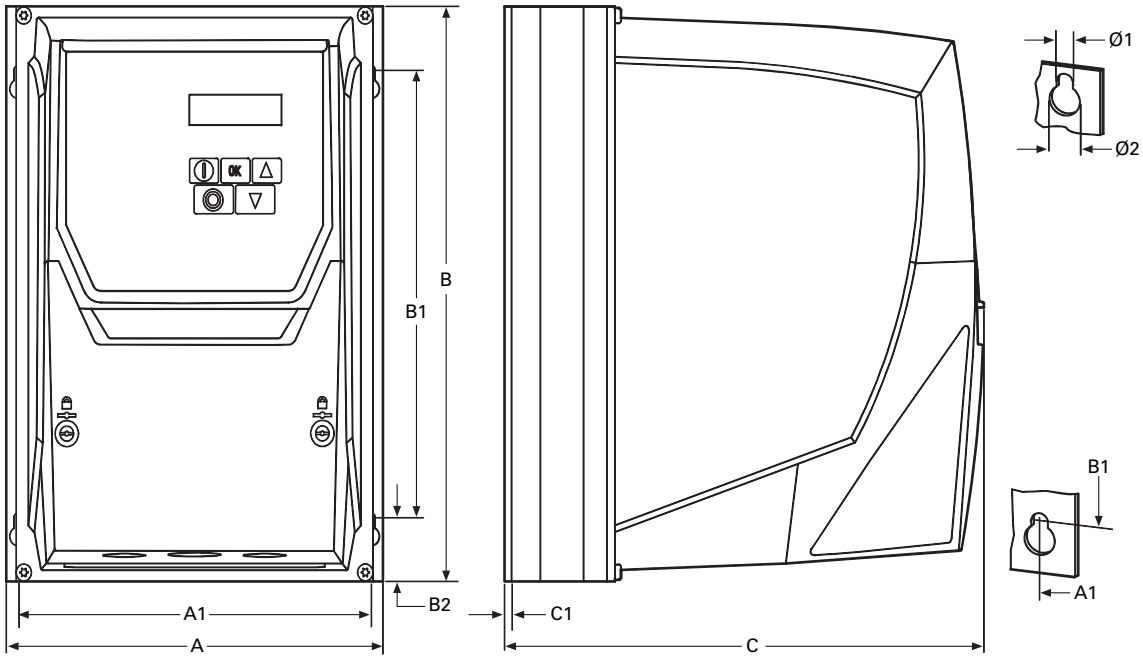

Frame Size	A	A1	B	B1	B2	C	C1	Ø1	Ø2	Weight lbs (kg)
FS2	7.40 (188.0)	6.93 (176.0)	10.12 (257.0)	7.87 (200.0)	0.79 (20.0)	9.42 (239.3)	0.14 (3.5)	0.16 (4.2)	0.33 (8.5)	10.4 (4.5)
FS3	8.29 (211.0)	7.78 (198.0)	12.20 (310.0)	9.90 (252.0)	0.98 (25.0)	10.48 (266.3)	0.14 (3.5)	0.16 (4.2)	0.33 (8.5)	15.9 (7.0)

Approximate Dimensions in Inches (mm)

DA1, Sizes FS2 and FS3, Degree of Protection IP66/NEMA 4, with Local Controls

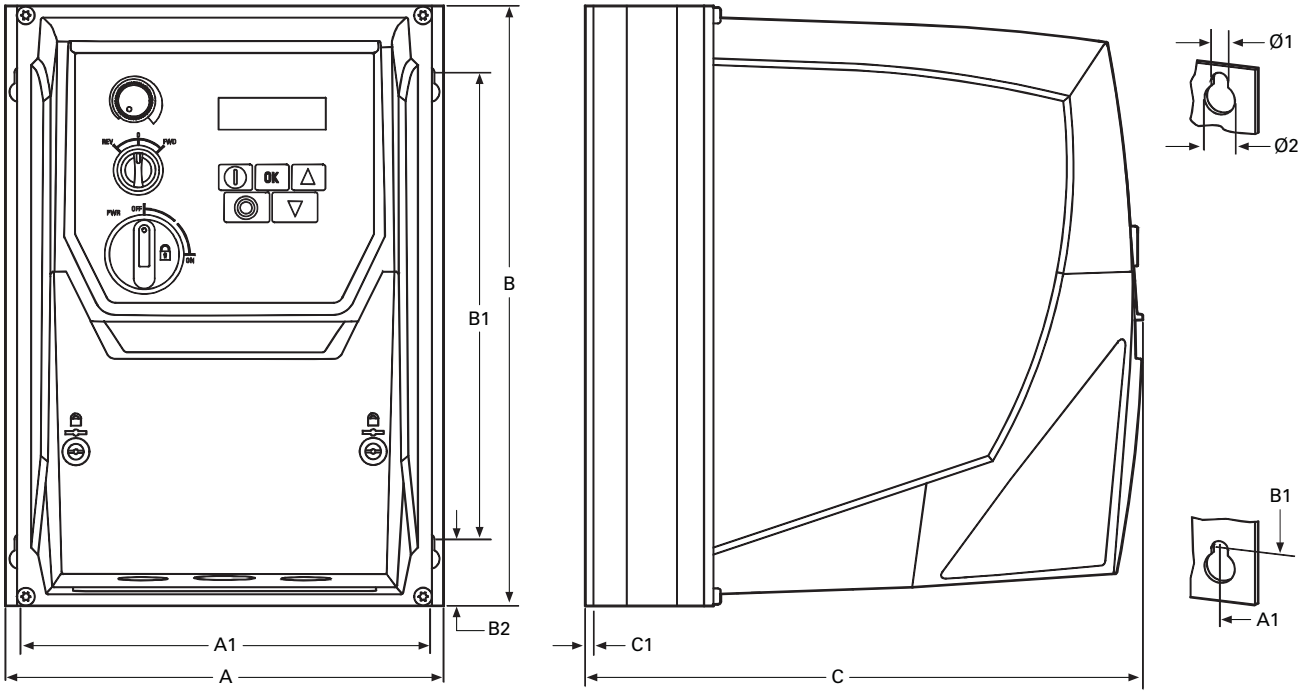

Frame Size	A	A1	B	B1	B2	C	C1	Ø1	Ø2	Weight lbs (kg)
FS2	7.40 (188.0)	6.93 (176.0)	10.12 (257.0)	7.87 (200.0)	0.79 (20.0)	9.42 (239.3)	0.14 (3.5)	0.16 (4.2)	0.33 (8.5)	10.6 (4.8)
FS3	8.29 (211.0)	7.78 (198.0)	12.20 (310.0)	9.90 (252.0)	0.98 (25.0)	10.48 (266.3)	0.14 (3.5)	0.16 (4.2)	0.33 (8.5)	16.1 (7.3)

M-Max Series Drives for Machinery Applications

Contents

Description	*Page*
M-Max Series Drives	
Standards and Certifications	**V6-T2-37**
Catalog Number Selection	**V6-T2-37**
Product Selection	**V6-T2-38**
Accessories	**V6-T2-39**
Technical Data and Specifications	**V6-T2-42**
Dimensions	**V6-T2-44**

Product Description

Eaton's M-Max™ Series Sensorless Vector Adjustable Frequency AC Drives are the next generation of drives specifically engineered for today's machinery applications. These micro-processor-based drives have standard features that can be programmed to tailor the drive's performance to suit a wide variety of application requirements. The M-Max product line uses a 32-bit microprocessor and insulated gate bipolar transistors (IGBTs) that provide quiet motor operation, high motor efficiency, and smooth low-speed performance. The size and simplicity of the M-Max make it ideal for hassle-free installation. Models rated at 575 volts, three-phase, 50/60 Hz are available in sizes ranging from 1 to 7-1/2 hp. Models rated at 480 volts, three-phase, 50/60 Hz are available in sizes ranging from 1/2 to 25 hp. Models rated at 240 volts, single- or three-phase, 50/60 Hz are available in sizes ranging from 1/4 to 15 hp. Models rated at 115 volts, single-phase, 50/60 Hz are available in the 1/4 to 1-1/2 hp size range.

The standard drive includes a digital display, and operating and programming keys on a visually appealing, efficient application programming interface. The display provides drive monitoring, as well as adjustment and diagnostic information. The keys are used for digital adjustment and programming of the drive, as well as for operator control. Separate terminal blocks for control and power wiring are provided for customer connections.

Features

- Ease of use—preset application macros, startup wizard, diagnostic capabilities
- Compact, space-saving design
- Rugged and reliable—150% torque for one minute, 50C rated, conformal coated boards
- DIN rail and screw mountable
- Side-by-side installation
- Industry leading efficiency delivers energy savings to the customer
- Integrated 5% DC choke (FS4 and FS5)
- Integrated EMC filters make the unit suitable for commercial and industrial networks
- IP21 as standard, option for NEMA® 1 (FS4 and FS5)
- IP20 as standard, option for IP21 and NEMA 1 (FS1–FS3)
- Brake chopper as standard in three-phase, applications of frames 2 (FS2) and larger
- Temperature-controlled fan
- RS-485/Modbus® as standard
- PID controller as standard
- Several fieldbus options
  - PROFIBUS
  - DeviceNet
  - CANopen

Standards and Certifications

Product

- Complies with EN61800-3 (2004)

Safety ①

- 61800-5-1
- EN60204-1
- CE
- UL
- cUL
- IEC
- RoHS compliant

EMC (At Default Settings)

- EMC Category C2, C3, and C4 (Level H): With an internal RFI filter option

Note

① See unit nameplate for more detailed approvals.

Catalog Number Selection

MMX 1 1 AA 1D1 F 0 – 0

Description
MMX = Base catalog number

Phase
1 = Single-phase
3 = Three-phase

Voltage	
1 = 120 V	**4** = 480 V
2 = 230 V	**5** = 575 V

Software Designation Series
AA

Output Current
1D6 = 1.6 A
010 = 10 A

EMC Filter
F = Filter
N = No filter

Enclosure Class
0 = NEMA 0 or IP20

Option
0 = Full version

Product Selection

M-Max

M-Max Basic Controller

hp ①	Volts ②	100% Continuous Current I_N (A)	Nominal Input Current (A)	Frame Size	Catalog Number ③
1/4	100–120 V single-phase in 230 V three-phase out	1.7	9.2	FS2	**MMX11AA1D7N0-0** ④
1/2		2.4	11.6		**MMX11AA2D4N0-0** ④
3/4		2.8	12.4		**MMX11AA2D8N0-0** ④
1		3.7	15		**MMX11AA3D7N0-0** ④
1-1/2		4.8	16.5	FS3	**MMX11AA4D8N0-0** ④
1/4	200–240 V single-phase in 230 V three-phase out	1.7	4.2	FS1	**MMX12AA1D7N0-0**
1/2		2.4	5.7		**MMX12AA2D4N0-0**
3/4		2.8	6.6		**MMX12AA2D8N0-0**
1		3.7	8.3	FS2	**MMX12AA3D7N0-0**
1-1/2		4.8	11.2		**MMX12AA4D8N0-0**
2		7	14.1		**MMX12AA7D0N0-0**
3		9.6	15.8	FS3	**MMX12AA9D6N0-0**
1/4	200–240 V three-phase in 230 V three-phase out	1.7	2.7	FS1	**MMX32AA1D7N0-0**
1/2		2.4	3.5		**MMX32AA2D4N0-0**
3/4		2.8	3.8		**MMX32AA2D8N0-0**
1		3.7	4.3	FS2	**MMX32AA3D7N0-0**
1-1/2		4.8	6.8		**MMX32AA4D8N0-0**
2		7	8.4		**MMX32AA7D0N0-0**
3		11	13.4	FS3	**MMX32AA011N0-0**
5		17	17	FS4	**MMX32AA017N0-0**
7-1/2		25	25		**MMX32AA025N0-0**
10		31	31	FS5	**MMX32AA031N0-0**
15		38	38		**MMX32AA038N0-0**
1/2	380–480 V three-phase in 460 V three-phase out	1.3	2.2	FS1	**MMX34AA1D3N0-0**
3/4		1.9	2.8		**MMX34AA1D9N0-0**
1		2.4	3.2		**MMX34AA2D4N0-0**
1-1/2		3.3	4	FS2	**MMX34AA3D3N0-0**
2		4.3	5.6		**MMX34AA4D3N0-0**
3		5.6	7.3		**MMX34AA5D6N0-0**
4		7.6	9.6	FS3	**MMX34AA7D6N0-0**
5		9	11.5		**MMX34AA9D0N0-0**
7-1/2		12	14.9		**MMX34AA012N0-0**
10		14	18.7		**MMX34AA014N0-0**
10		16	16	FS4	**MMX34AA016N0-0**
15		23	23		**MMX34AA023N0-0**
20		31	31	FS5	**MMX34AA031N0-0**
25		38	38		**MMX34AA038N0-0**
1	575 V three-phase in 575 V three-phase out	1.7	2.0	FS3	**MMX35AA1D7N0-0** ⑤
2		2.7	3.6		**MMX35AA2D7N0-0** ⑤
3		3.9	5.0		**MMX35AA3D9N0-0** ⑤
5		6.1	7.6		**MMX35AA6D1N0-0** ⑤
7-1/2		9.0	10.4		**MMX35AA9D0N0-0** ⑤

Notes

① Horsepower ratings are based on the use of a 240 V, 460 V, and 575 V NEMA B, four- or six-pole squirrel cage induction motor and are for reference only. Units are to be selected such that the motor current is less than or equal to the MMX rated continuous output current.

② For 208 V, 380 V, or 415 V applications, select the unit such that the motor current is less than or equal to the MMX rated continuous output current.

③ For EMC filtered unit, replace "N0-0" with "F0-0".

④ EMC filters are not available on MMX11 units.

⑤ All 575 V units come with EMC filter standard.

Accessories

M-Max Copy/Paste Module

Description	Catalog Number
Module is plugged onto the front of the drive to provide: upload/download of all parameters, direct link to a PC via USB interface for parameter assignment via MaxConnect software, and copying of parameters for a series of devices or when exchanging devices. No PC required	**MMX-COM-PC**

PC Cable

Description	Catalog Number
Remote download USB to RJ-45 cable with software driver disk	**REM-USB-DOWN**

NEMA Type 1 Kits ①

Description	Catalog Number
NEMA Type 1 and IP21 kit for frame 1	**MMX-IP21-FS1**
NEMA Type 1 and IP21 kit for frame 2	**MMX-IP21-FS2**
NEMA Type 1 and IP21 kit for frame 3	**MMX-IP21-FS3**
NEMA Type 1 for frame 4	**MMX-CKIT-FS4**
NEMA Type 1 for frame 5	**MMX-CKIT-FS5**

Optional Communication Modules

Network cards require communication adapter.

Description	Catalog Number
Communication adapter kit (FS1–FS3)	**MMX-NET-XA**
Communication adapter kit (FS4 and FS5)	**MMX-NET-XA-45**
PROFIBUS DP network card with serial connection ②	**XMX-NET-PS-A**
PROFIBUS DP network card with Sub-D connection ②	**XMX-NET-PD-A**
DeviceNet network card ②	**XMX-NET-DN-A**
CANopen network card ②	**XMX-NET-CO-A**

Remote Keypad ③

There are three components needed for a full remote keypad.

Description	Catalog Number
Bezel and cable	**OPTRMT-BP-HMAX** ③
Remote copy/paste keypad	**MMX-REMKEY-TEXT** ③
VFD adapter	**MMX-ADAPTER-RJ45** ③

Notes

① NEMA Type 1 kit provides conduit entry plate.
② Requires communication adapter kit.
③ All three components are required for remote keypad operation.

Line and Load Reactors

A line and load reactor is a three-phase inductance filter that can be placed on the line and load side of the AFD to help improve the harmonic performance of the system. Consult the factory for additional filtering options and further technical details.

DR1 Line Reactor

A line reactor helps to provide a moderate reduction in current harmonics similar to a DC choke. It also provides increased input protection for AFD and its semiconductors from line transients helping to extend the life of the AFD.

DR2 Output Reactor

An output filter is used to reduce the transient voltage (dV/dt) at the motor terminals. The output filter is recommended for cable lengths exceeding 100 ft (30 m) with a drive of 3 hp and above and for cable lengths of 33 ft (10 m) with a drive of 2 hp and below.

Line and Load Reactors—Catalog Number Selection

D R1 – 2 2D0 – 0 5

Basic Naming
D = Drive

Device Series
R1 = Line side reactor
R2 = Load side reactor

Input/Output Voltage
2 = 230 V
4 = 480 V
5 = 575 V

Current Rating
Examples:
2D0 = 2.0 A
4D0 = 4.0 A
8D0 = 8.0 A
012 = 12 A

Environment Rating
0 = Open
1 = NEMA 1

Impedance
3 = 3%
5 = 5%

Line and Load Reactors—230 V

	Open				NEMA 1			
	Load Reactor		Line Reactor		Load Reactor		Line Reactor	
hp (CT)	3%	5%	3%	5%	3%	5%	3%	5%
0.33	DR2-22D0-03	DR2-22D0-05	DR1-21D7-03	DR1-21D7-05	DR2-22D0-13	DR2-22D0-15	DR1-21D7-13	DR1-21D7-15
0.5	DR2-22D0-03	DR2-22D0-05	DR1-22D2-03	DR1-22D2-05	DR2-22D0-13	DR2-22D0-15	DR1-22D2-13	DR1-22D2-15
0.75	DR2-24D0-03	DR2-24D0-05	DR1-23D2-03	DR1-23D2-05	DR2-24D0-13	DR2-24D0-15	DR1-23D2-13	DR1-23D2-15
1	DR2-24D0-03	DR2-28D0-05	DR1-24D2-03	DR1-24D2-05	DR2-24D0-13	DR2-28D0-15	DR1-24D2-13	DR1-24D2-15
1.5	DR2-28D0-03	DR2-28D0-05	DR1-26D0-03	DR1-26D0-05	DR2-28D0-13	DR2-28D0-15	DR1-26D0-13	DR1-26D0-15
2	DR2-28D0-03	DR2-28D0-05	DR1-26D8-03	DR1-26D8-05	DR2-28D0-13	DR2-28D0-15	DR1-26D8-13	DR1-26D8-15
3	DR2-2012-03	DR2-2012-05	DR1-29D6-03	DR1-29D6-05	DR2-2012-13	DR2-2012-15	DR1-29D6-13	DR1-29D6-15
5	DR2-2018-03	DR2-2018-05	DR1-2015-03	DR1-2015-05	DR2-2018-13	DR2-2018-15	DR1-2015-13	DR1-2015-15
7.5	DR2-2025-03	DR2-2025-05	DR1-2022-03	DR1-2022-05	DR2-2025-13	DR2-2025-15	DR1-2022-13	DR1-2022-15
10	DR2-2035-03	DR2-2035-05	DR1-2028-03	DR1-2028-05	DR2-2035-13	DR2-2035-15	DR1-2028-13	DR1-2028-15
15	DR2-2045-03	DR2-2045-05	DR1-2042-03	DR1-2042-05	DR2-2045-13	DR2-2045-15	DR1-2042-13	DR1-2042-15

Line and Load Reactors—480 V

	Open				NEMA 1			
	Load Reactor		Line Reactor		Load Reactor		Line Reactor	
hp (CT)	3%	5%	3%	5%	3%	5%	3%	5%
0.5	DR2-41D0-03	DR2-41D0-05	DR1-41D1-03	DR1-41D1-05	DR2-41D0-13	DR2-41D0-15	DR1-41D1-13	DR1-41D1-15
0.75	DR2-42D0-03	DR2-42D0-05	DR1-41D6-03	DR1-41D6-05	DR2-42D0-13	DR2-42D0-15	DR1-41D6-13	DR1-41D6-15
1	DR2-42D0-03	DR2-42D0-05	DR1-42D1-03	DR1-42D1-05	DR2-42D0-13	DR2-42D0-15	DR1-42D1-13	DR1-42D1-15
1.5	DR2-44D0-03	DR2-44D0-05	DR1-43D0-03	DR1-43D0-05	DR2-44D0-13	DR2-44D0-15	DR1-43D0-13	DR1-43D0-15
2	DR2-44D0-03	DR2-44D0-05	DR1-43D4-03	DR1-43D4-05	DR2-44D0-13	DR2-44D0-15	DR1-43D4-13	DR1-43D4-15
3	DR2-48D0-03	DR2-48D0-05	DR1-44D8-03	DR1-44D8-05	DR2-48D0-13	DR2-48D0-15	DR1-44D8-13	DR1-44D8-15
5	DR2-48D0-03	DR2-48D0-05	DR1-47D6-03	DR1-47D6-05	DR2-48D0-13	DR2-48D0-15	DR1-47D6-13	DR1-47D6-15
7.5	DR2-4012-03	DR2-4012-05	DR1-4011-03	DR1-4011-05	DR2-4012-13	DR2-4012-15	DR1-4011-13	DR1-4011-15
10	DR2-4018-03	DR2-4018-05	DR1-4014-03	DR1-4014-05	DR2-4018-13	DR2-4018-15	DR1-4014-13	DR1-4014-15
15	DR2-4025-03	DR2-4025-05	DR1-4021-03	DR1-4021-05	DR2-4025-13	DR2-4025-15	DR1-4021-13	DR1-4021-15
20	DR2-4025-03	DR2-4025-05	DR1-4027-03	DR1-4027-05	DR2-4025-13	DR2-4025-15	DR1-4027-13	DR1-4027-15
25	DR2-4035-03	DR2-4035-05	DR1-4034-03	DR1-4034-05	DR2-4035-13	DR2-4035-15	DR1-4034-13	DR1-4034-15

Line and Load Reactors—575 V

	Open				NEMA 1			
	Load Reactor		Line Reactor		Load Reactor		Line Reactor	
hp (CT)	3%	5%	3%	5%	3%	5%	3%	5%
1	DR2-52D0-03	DR2-52D0-05	DR1-51D7-03	DR1-51D7-05	DR2-52D0-13	DR2-52D0-15	DR1-51D7-13	DR1-51D7-15
2	DR2-54D0-03	DR2-54D0-05	DR1-43D4-03	DR1-52D7-05	DR2-54D0-13	DR2-54D0-15	DR1-52D7-13	DR1-52D7-15
3	DR2-54D0-03	DR2-54D0-05	DR1-53D9-03	DR1-53D9-05	DR2-54D0-13	DR2-54D0-15	DR1-53D9-13	DR1-53D9-15
5	DR2-58D0-03	DR2-58D0-05	DR1-56D1-03	DR1-56D1-05	DR2-58D0-13	DR2-58D0-15	DR1-56D1-13	DR1-56D1-15
7.5	DR2-58D0-03	DR2-58D0-05	DR1-59D0-03	DR1-59D0-05	DR2-58D0-13	DR2-58D0-15	DR1-59D0-13	DR1-59D0-15

Technical Data and Specifications

Ratings

M-Max Basic Controller IP20 Standard Ratings

Description	Specification
Protections	
Overcurrent protection	Trip limit 4.0 x I_H instantaneously
Overvoltage protection	115/230 V series: 437 Vdc; 400 V series: 874 Vdc; 575 V series: 1048 Vdc trip level
Undervoltage protection	115/230 V series: 183 Vdc; 400 V series: 333 Vdc; 575 V series: 460 Vdc trip level
Ground fault protection	Ground fault is tested before every start. In case of ground fault in motor or motor cable, only the frequency converter is protected
Overtemperature protection	Yes
Motor overload protection	Yes
Motor stall protection	Yes
Motor underload protection	Yes
Short-circuit protection	100 kAIC with Type J fuses

Programmable Parameters

Description
Application macros: basic, pump, fan and high load (hoist)
Programmable start/stop and reverse signal logic (sinking or sourcing)
Reference scaling
Programmable start and stop functions
DC-brake at start and stop
Programmable V/Hz curve
Adjustable switching frequency
Autorestart function after fault
Protections and supervisions (all fully programmable; off, warning, fault)
Current signal input fault
External fault
Fieldbus communication
Eight preset speeds
Analog input range selection, signal scaling and filtering
PID controller
Skip frequencies

Specifications

M-Max Series Drives

Description	Specification
Input Ratings	
Input voltage (V_{in})	+10%/–15%
Input frequency (f_{in})	50/60 Hz (variation up to 45–66 Hz)
Connection to power	Once per minute or less (typical operation)
Output Ratings	
Output voltage	0 to V_{in} ①
Continuous output current	Continuous rated current I_N at ambient temperature max. 122 °F (50 °C), overload 1.5 x I_N max. 1 min/10 min
Output frequency	0 to 320 Hz
Frequency resolution	0.01 Hz
Initial output current (I_H)	Current 2 x I_N for 2 seconds in every 20-second period Torque depends on motor
Control Characteristics	
Control method	Frequency control (V/Hz) open loop or sensorless vector control
Switching frequency	1.5 to 16 kHz; default 4 kHz
Frequency reference	Analog input: resolution 0.1% (10-bit), accuracy ± 1% V/Hz Panel reference: resolution 0.01 Hz
Field weakening point	30 to 320 Hz
Acceleration time	0 to 3000 sec
Deceleration time	0 to 3000 sec
Braking torque	DC brake: 30% x T_n (without brake option)
Brake Resistor (Minimum Values) ②	
230 V Series	FS2 35 ohms and FS3 26 ohms, FS4 14 ohms, FS5 9 ohms
400 V Series	FS2 75 ohms and FS3 54 ohms, FS4 28 ohms, FS5 17 ohms
575 V Series	FS3 103 ohms
Ambient Conditions	
Ambient operating temperature	14 °F (–10 °C), no frost to 122 °F (+50 °C): Rated loadability I_N
Storage temperature	–40 °F (–40 °C) to 158 °F (70 °C)
Relative humidity	0 to 95% RH, noncondensing, non-corrosive, no dripping water
Air quality	Chemical vapors: IEC 721-3-3, unit in operation, Class 3C2; Mechanical particles: IEC 721-3-3, unit in operation, Class 3S2
Altitude	100% load capacity (no derating) up to 3280 ft (1000 m); 1% derating for each 328 ft (100 m) above 3280 ft (1000 m); max. 6560 ft (2000 m)
Vibration	EN 60068-2-6; 3 to 150 Hz, displacement amplitude 1 mm (peak) at 3 to 15.8 Hz, max. acceleration amplitude 1G at 15.8 to 150 Hz
Shock	EN 50178, IEC 68-2-27 UPS Drop test (for applicable UPS weights); storage and shipping: max. 15 g, 11 ms (in package)
Enclosure class	IP20 (FS1–FS3) IP21 (FS4 and FS5)

Notes

① Exception: 115 V single-phase in, 230 V three-phase out.

② Only three-phase FS2 and FS3 drives are equipped with brake chopper circuit.

Standards

I/O Specifications

- Digital inputs DI1–DI6 are freely programmable. The user can assign multiple functions to a single input
- Digital, relay, and analog outputs are freely programmable

Includes:

- Six digital inputs
- Two analog inputs
  - 4–20 mA
  - 0–10 V
- One analog output
- One digital output
- Two relay outputs
- RS-485 interface

Reliability

- Pretested components
- Computerized testing
- Final test with full load
- Conformal-coated boards
- Eaton's Electrical Services & Systems: national network of AF drive specialists

M-Max I/O Interface

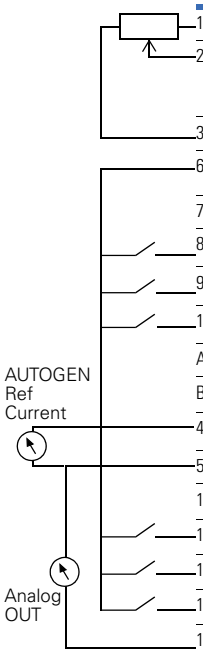

Terminal		Signal	Factory Preset	Description
1	+10 V	Ref. output voltage	—	Maximum load 10 mA
2	AI1	Analog signal in 1	Freq. reference P)	0–+10 V Ri = 200k ohms [min.]
3	GND	I/O signal ground	—	—
6	24 V	24 V output for DIs	—	±20%, max. load 50 mA
7	GND	I/O signal ground	—	—
8	DI1	Digital input 1	Start forward P)	0–+30 V Ri = 12k ohms min.
9	DI2	Digital input 2	Start reverse P)	—
10	DI3	Digital input 3	Preset speed P)	—
A	A	RS-485 signal A	FB communication	—
B	B	RS-485 signal B	FB communication	—
4	AI2	Analog signal in 2	PI actual value P)	0[4]–20 mA, Ri = 200k ohms
5	GND	I/O signal ground	—	—
13	GND	I/O signal ground	—	—
14	DI4	Digital input 4	Preset speed B1 P)	0–+30 V Ri = 12k ohms min.
15	DI5	Digital input 5	Fault reset P)	0–+30 V Ri = 12k ohms min.
16	DI6	Digital input 6	Disable PI contr. P)	0–+30 V Ri = 12k ohms min.
18	AO	Analog output	Output frequency P)	0(2)–10 V, RL = 500 ohms
20	DO	Digital signal out	Active = READY P)	Open collector, max. load 48V/50 mA
22	RO11	Relay out 1	Active = RUN P)	Max. switching load: 250 Vac/2 A or 250 Vdc/0.4 A
23	RO12			
24	RO21	Relay out 2	Active = FAULT P)	Max. switching load: 250 Vac/2 A or 250 Vdc/0.4 A
25	RO22			
26	RO23			

Note

P) Parameter-selectable function.

Dimensions

Approximate Dimensions in Inches (mm)

Dimensions and Frame Sizes, FS1–FS3 (FS = Frame Size)

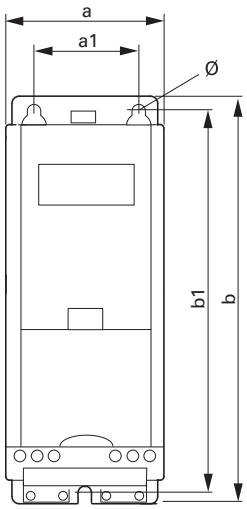

FS1

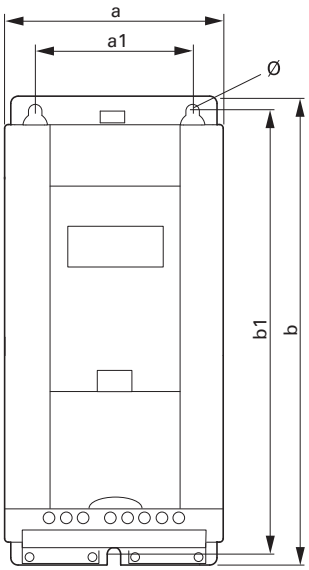

FS2

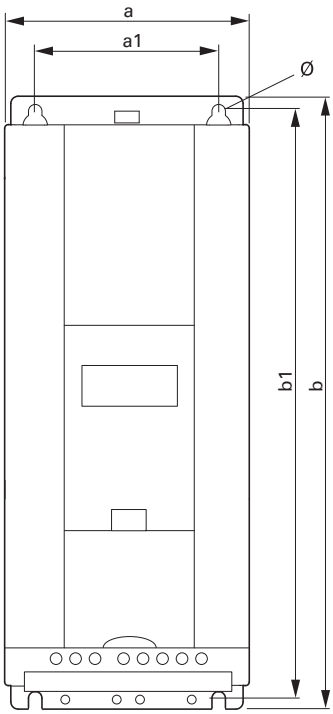

FS3

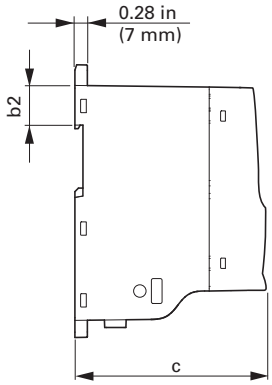

Approximate Dimensions in Inches (mm)

Dimensions and Frame Sizes, FS4 and FS5 (FS = Frame Size)

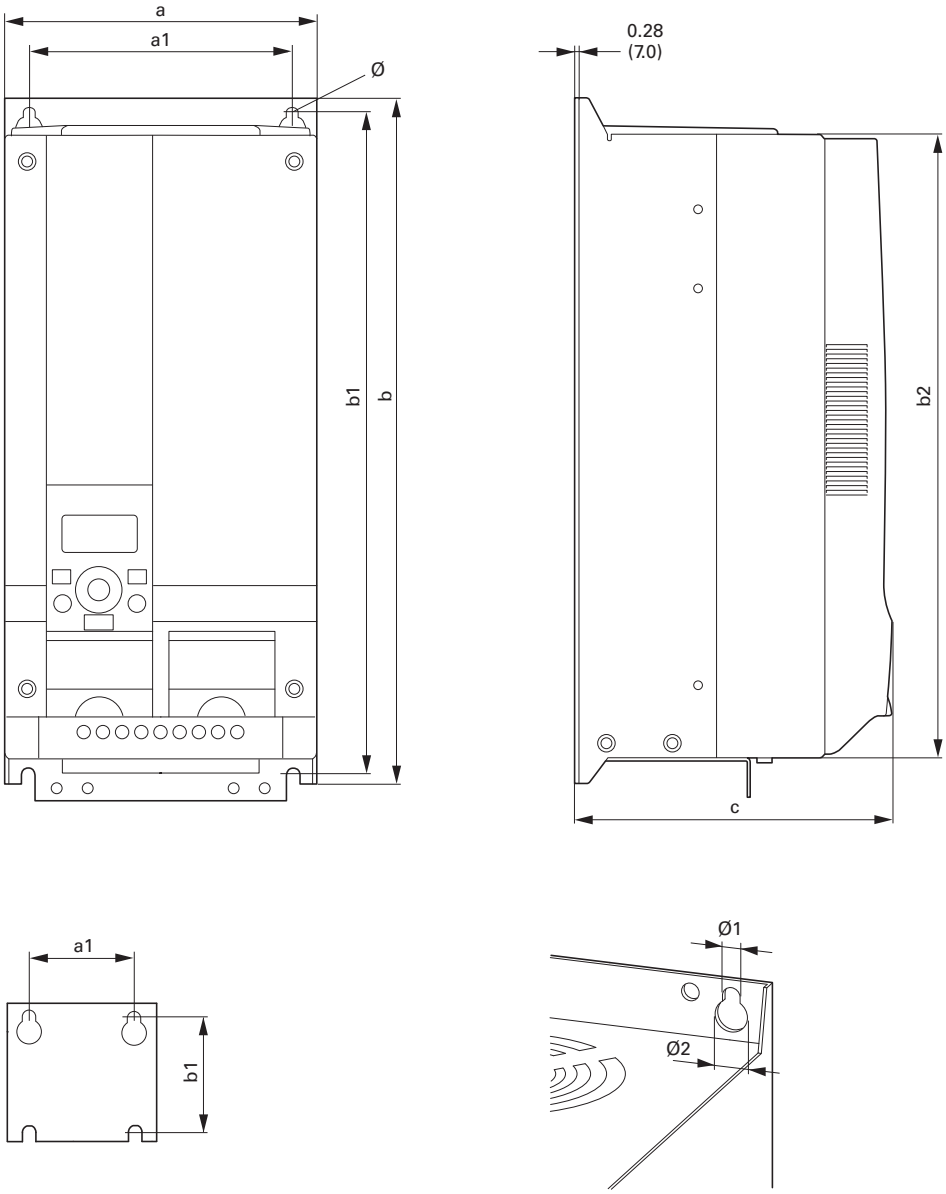

Dimensions and Frame Sizes

Part Number	Approximate Dimensions in inches (mm) a	a1	b	b1	b2	c	Ø, Ø1	Ø2	Installation Size
MMX12AA1D7_ **MMX12AA2D4_** **MMX12AA2D8_**	2.60 (66)	1.50 (38)	6.30 (160)	5.79 (147)	1.26 (32)	4.02 (102)	0.18 (4.5)	—	FS1
MMX32AA1D7_ **MMX32AA2D4_** **MMX32AA2D8_**									
MMX34AA1D3_ **MMX34AA1D9_** **MMX34AA2D4_**									
MMX11AA1D7_ **MMX11AA2D4_** **MMX11AA2D8_** **MMX11AA3D7_**	3.54 (90)	2.46 (62.5)	7.68 (195)	7.17 (182)	1.26 (32)	4.14 (105)	2.17 (5.5)	—	FS2
MMX12AA3D7_ **MMX12AA4D8_** **MMX12AA7D0_**									
MMX32AA3D7_ **MMX32AA4D8_** **MMX32AA7D0_**									
MMX34AA3D3_ **MMX34AA4D3_** **MMX34AA5D6_**									
MMX11AA4D8_	3.94 (100)	2.95 (75)	9.96 (253)	9.53 (242)	1.34 (34)	4.41 (112)	2.17 (5.5)	—	FS3
MMX12AA9D6_									
MMX32AA011_									
MMX34AA7D6_ **MMX34AA9D0_** **MMX34AA012_** **MMX34AA014_**									
MMX35AA1D7_ **MMX35AA2D7_** **MMX35AA3D9_** **MMX35AA6D1_** **MMX35AA9D0_**									
MMX32AA012_ **MMX32AA017_** **MMX32AA025_**	6.50 (165.0)	5.51 (140.0)	14.57 (370.0)	13.82 (351.0)	13.27 (337.0)	6.61 (168.0)	0.28 (7.0)	0.55 (14.0)	FS4
MMX34AA016_ **MMX34AA023_**									
MMX32AA031_ **MMX32AA038_**	6.50 (165.0)	5.51 (140.0)	16.30 (414.0)	15.67 (398.0)	15.08 (383.0)	8.07 (205.0)	0.28 (7.0)	0.55 (14.0)	FS5
MMX34AA031_ **MMX34AA038_**									

Note

1 in = 25.4 mm, 1 mm = 0.0394 in

Approximate Dimensions in Inches (mm)

NEMA 1/IP21 M-Max Drives and Communication Adapter Kit

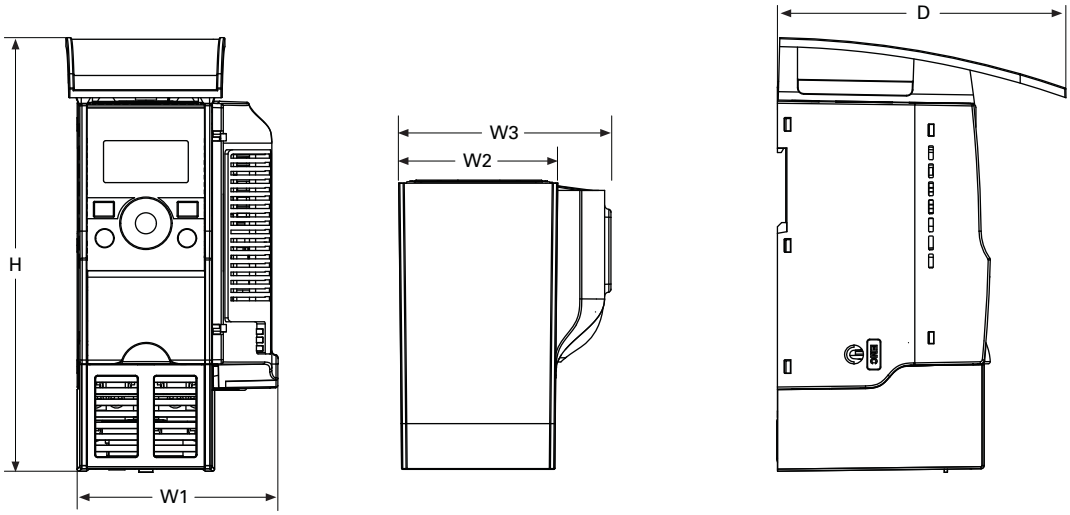

Frame Type	H	W1	W2	W3	D
FS1	8.14 (206.7)	3.77 (95.7)	2.99 (75.9)	3.98 (101.2)	5.41 (137.5)
FS2	9.90 (251.5)	4.72 (120.0)	3.97 (100.8)	4.94 (125.5)	5.68 (144.2)
FS3	12.26 (311.5)	5.12 (130.1)	4.36 (110.8)	5.33 (135.3)	6.32 (160.5)
FS4	16.40 (416.6)	—	6.50 (165.0)	—	6.61 (166.0)
FS5	18.10 (460.1)	—	6.50 (165.0)	—	8.07 (205.0)

DG1 General Purpose Drive

Contents

Description	*Page*
PowerXL DG1 Series Drives	
Standards and Certifications	**V6-T2-49**
Catalog Number Selection	**V6-T2-49**
Product Selection	**V6-T2-50**
Accessories	**V6-T2-53**
Replacement Parts	**V6-T2-59**
Technical Data and Specifications	**V6-T2-62**
Dimensions	**V6-T2-68**
PowerXL DG1 Series Enclosed Drives	**V6-T2-69**

PowerXL DG1 Series Drives

Product Description

The DG1 general purpose drives are part of Eaton's next generation PowerXL Series of adjustable frequency drives specifically engineered for today's more demanding commercial and industrial applications. The power unit makes use of the most sophisticated semiconductor technology and a highly modular construction that can be flexibly adapted to meet the customer's needs.

The control module was designed to include today's standard communication protocols and I/O while still having the modularity to add additional option cards.

Eaton's patented Active Energy Control is also a standard feature on DG1 drives, offering customers increased efficiency, safety and reliability.

These drives continue the tradition of robust performance and raise the bar on features and functionality, ensuring the best solution at the right price.

Product Range

230 V to 125 hp, 312 A, 90 kW
480 V to 250 hp, 310 A, 160 kW
575 V to 250 hp, 250 A, 160 kW

Features and Benefits

Hardware

- Brake chopper standard on Frames 1, 2, 3
- Dual overload ratings
  - 110% variable torque (I_L)
  - 150% constant torque (I_H)
- Type 1/IP21 and Type 12/IP54 enclosures available
- Integrated common mode reduction 5% DC link choke with input surge protection
- EMI/RFI filters standard on all drives—meets EMC Category C2
- Real-time clock—supports calendaring and PLC functionality
- Graphic LCD display and keypad—supports simple menu navigation as well as on-screen diagnostics and troubleshooting
- LOCAL/REMOTE operation from keypad and two configurable soft keys
- Conformal coated control and power boards standard
- Control logic can be powered from an external auxiliary control panel—internal drive functions and fieldbus if necessary
- Standard I/O:
  - 8DI, 1DO
  - 2AI, 2AO
  - 2FC, 1FA relays
- Standard communications:
  - EtherNet/IP, Modbus TCP
  - RS-485: Modbus RTU, BACnet MS/TP
- Seamless integration into EtherNet/IP networks via EIP-Assist I/O tag-generation tool
- Two expansion slots—intended to support additional I/O or communication protocols as necessary
- Quick disconnect terminals for I/O connections—supports fast easy installation
- Safe Torque Off (STO) built-in with functional safety SIL1 certification

Software

- Active energy control—minimizes energy losses in your motor, resulting in industry-leading energy efficiency for your application
- Quick Start Wizard upon initial power-up supports fast, easy installation
- Standard applications:
  - Standard
  - Multi-pump and fan Control
  - Multi-PID
  - Multi-purpose
- Copy/paste functionality on drive keypad—allows for fast setup of multiple drives
- Pre-programmed I/O—supports fast, easy installation for most applications
- Dynamic motor regenerative energy management
- Advanced PC Tool with diagnostic capabilities
- Two keypad software keys for easy menu navigation and shortcuts

Standards and Certifications

Product

- IEC/EN 61800-5-1
- IEC/EN 61800-5-2
- UL 508C
- IEC 61508
- EN 62061
- EN ISO 13849-1

EMC

- Immunity: IEC/EN 61800-3
- Category C2

Certification

- UL
- cUL
- CE
- C-Tick
- RoHS
- EAC
- Plenum rated

Catalog Number Selection

Catalog Number Selection is for illustrative purposes only and not to be used to create new catalog numbers.

PowerXL Series—DG1 General Purpose Drive

Series | **Power Part** | **Options**

D G1 – 3 4 4D3 F B – C 21 C

Basic Naming
D = Drive

Series
G1 = General purpose

Phase Reference ①
3 = 3~ INPUT/3~ OUTPUT
① Consult Application Notes for single-phase.

Input/Output Voltage Rating
2 = 230 V (208–240 V, –15%, +10%)
4 = 400 V (380–500 V, –15%, +10%)
5 = 575 V (525–600 V, –15%, +10%)

Internal Brake Chopper
N = No brake chopper
B = Brake chopper

Internal EMC Filter
D = DC choke only
E = EMC filter only
F = Internal EMC filter and DC choke
N = No EMC filter, no DC choke

Coating of Boards
C = Coated

Enclosure (IP Rating)
00 = IP00
21 = IP21/Type 1
54 = IP54/Type 12

Display Option
C = LCD (graphical)
N = No display

Output Current Rating (CT)

208–240 V	380–500 V	525–600 V
3D7 = 3.7 A, 0.55 kW, 0.75 hp	**2D2** = 2.2 A, 0.75 kW, 1 hp	**3D3** = 3.3 A, 1.5 kW, 2 hp
4D8 = 4.8 A, 0.75 kW, 1 hp	**3D3** = 3.3 A, 1.1 kW, 1.5 hp	**4D5** = 4.5 A, 2.2 kW, 3 hp
6D6 = 6.6 A, 1.1 kW, 1.5 hp	**4D3** = 4.3 A, 1.5 kW, 2 hp	**7D5** = 7.5 A, 3.7 kW, 5 hp
7D8 = 7.8 A, 1.5 kW, 2 hp	**5D6** = 5.6 A, 2.2 kW, 3 hp	**010** = 10 A, 5.5 kW, 7.5 hp
011 = 11 A, 2.2 kW, 3 hp	**7D6** = 7.6 A, 3 kW, 5 hp	**013** = 13.5 A, 7.5 kW, 10 hp
012 = 12.5 A, 3 kW, 5 hp (VT)	**9D0** = 9 A, 4 kW, 7.5 hp (VT)	**018** = 18 A, 11 kW, 15 hp
017 = 17.5 A, 3.7 kW, 5 hp	**012** = 12 A, 5.5 kW, 7.5 hp	**022** = 22 A, 15 kW, 20 hp
025 = 25 A, 5.5 kW, 7.5 hp	**016** = 16 A, 7.5 kW, 10 hp	**027** = 27 A, 18 kW, 25 hp
031 = 31 A, 7.5 kW, 10 hp	**023** = 23 A, 11 kW, 15 hp	**034** = 34 A, 22 kW, 30 hp
048 = 48 A, 11 kW, 15 hp	**031** = 31 A, 15 kW, 20 hp	**041** = 41 A, 30 kW, 40 hp
061 = 61 A, 15 kW, 20 hp	**038** = 38 A, 18 kW, 25 hp	**052** = 52 A, 37 kW, 50 hp
075 = 75 A, 18.5 kW, 25 hp	**046** = 46 A, 22 kW, 30 hp	**062** = 62 A, 45 kW, 60 hp
088 = 88 A, 22 kW, 30 hp	**061** = 61 A, 30 kW, 40 hp	**080** = 80 A, 55 kW, 75 hp
114 = 114 A, 30 kW, 40 hp	**072** = 72 A, 37 kW, 50 hp	**100** = 100 A, 75 kW, 100 hp
143 = 143 A, 37 kW, 50 hp	**087** = 87 A, 45 kW, 60 hp	**125** = 125 A, 90 kW, 125 hp
170 = 170 A, 45 kW, 60 hp	**105** = 105 A, 55 kW, 75 hp	**144** = 144 A, 110 kW, 150 hp
211 = 211 A, 55 kW, 75 hp	**140** = 140 A, 75 kW, 100 hp	**208** = 208 A, 132 kW, 200 hp
248 = 248 A, 75 kW, 100 hp	**170** = 170 A, 90 kW, 125 hp	
	205 = 205 A, 110 kW, 150 hp	
	245 = 245 A, 132 kW, 200 hp	

PowerXL Series—DG1 General Purpose Drive Option Boards

DX G – NET – PROFIBUS

Basic Naming
DX = PowerXL Drive

Series
G = General purpose

Type
NET = Communication card
EXT = I/O card
ACC = Accessory
SPR = Spare part
KEY = Keypad
CBL = Cable

Function
PROFB = PROFIBUS
DEVICENET = DeviceNet
CANOPEN = CANopen
SWD = SmartWire
See Accessories on **Page V6-T2-53** for full offering

Product Selection

DG1 Series Drives—208–240 Volt

2

PowerXL Series—DG1

Type 1/IP21

	Constant Torque (CT) / High Overload (I_H)			Variable Torque (VT) / Low Overload (I_L)			
Frame Size	**230 V, 50 Hz kW Rating**	**230 V, 60 Hz hp**	**Current A**	**230 V, 50 Hz kW Rating**	**230 V, 60 Hz hp**	**Current A**	**Catalog Number**
FR1	0.55	0.75	3.7	0.75	1	4.8	**DG1-323D7FB-C21C**
	0.75	1	4.8	1.1	1.5	6.6	**DG1-324D8FB-C21C**
	1.1	1.5	6.6	1.5	2	7.8	**DG1-326D6FB-C21C**
	1.5	2	7.8	2.2	3	11	**DG1-327D8FB-C21C**
	2.2	3	11	3	—	12.5	**DG1-32011FB-C21C**
FR2	3	—	12.5	3.7	5	17.5	**DG1-32012FB-C21C**
	3.7	5	17.5	5.5	7.5	25	**DG1-32017FB-C21C**
	5.5	7.5	25	7.5	10	31	**DG1-32025FB-C21C**
FR3	7.5	10	31	11	15	48	**DG1-32031FB-C21C**
	11	15	48	15	20	61	**DG1-32048FB-C21C**
FR4	15	20	61	18.5	25	75	**DG1-32061FN-C21C**
	18.5	25	75	22	30	88	**DG1-32075FN-C21C**
	22	30	88	30	40	114	**DG1-32088FN-C21C**
FR5	30	40	114	37	50	143	**DG1-32114FN-C21C**
	37	50	143	45	60	170	**DG1-32143FN-C21C**
	45	60	170	55	75	211	**DG1-32170FN-C21C**
FR6	55	75	211	75	100	261	**DG1-32211FN-C21C**
	75	100	248	90	125	312	**DG1-32248FN-C21C**

PowerXL Series—DG1

Type 12/IP54

	Constant Torque (CT) / High Overload (I_H)			Variable Torque (VT) / Low Overload (I_L)			
Frame Size	**230 V, 50 Hz kW Rating**	**230 V, 60 Hz hp**	**Current A**	**230 V, 50 Hz kW Rating**	**230 V, 60 Hz hp**	**Current A**	**Catalog Number**
FR1	0.55	0.75	3.7	0.75	1	4.8	**DG1-323D7FB-C54C**
	0.75	1	4.8	1.1	1.5	6.6	**DG1-324D8FB-C54C**
	1.1	1.5	6.6	1.5	2	7.8	**DG1-326D6FB-C54C**
	1.5	2	7.8	2.2	3	11	**DG1-327D8FB-C54C**
	2.2	3	11	3	—	12.5	**DG1-32011FB-C54C**
FR2	3	—	12.5	3.7	5	17.5	**DG1-32012FB-C54C**
	3.7	5	17.5	5.5	7.5	25	**DG1-32017FB-C54C**
	5.5	7.5	25	7.5	10	31	**DG1-32025FB-C54C**
FR3	7.5	10	31	11	15	48	**DG1-32031FB-C54C**
	11	15	48	15	20	61	**DG1-32048FB-C54C**
FR4	15	20	61	18.5	25	75	**DG1-32061FN-C54C**
	18.5	25	75	22	30	88	**DG1-32075FN-C54C**
	22	30	88	30	40	114	**DG1-32088FN-C54C**
FR5	30	40	114	37	50	143	**DG1-32114FN-C54C**
	37	50	143	45	60	170	**DG1-32143FN-C54C**
	45	60	170	55	75	211	**DG1-32170FN-C54C**
FR6	55	75	211	75	100	261	**DG1-32211FN-C54C**
	75	100	248	90	125	312	**DG1-32248FN-C54C**

DG1 Series Drives—380–500 Volt

PowerXL Series—DG1

Type 1/IP21

	Constant Torque (CT) / High Overload (I_H)			Variable Torque (VT) / Low Overload (I_L)			
Frame Size	**400 V, 50 Hz kW Rating**	**460 V, 60 Hz hp**	**Current A**	**400 V, 50 Hz kW Rating**	**460 V, 60 Hz hp**	**Current A**	**Catalog Number**
FR1	0.75	1	2.2	1.1	1.5	3.3	**DG1-342D2FB-C21C**
	1.1	1.5	3.3	1.5	2	4.3	**DG1-343D3FB-C21C**
	1.5	2	4.3	2.2	3	5.6	**DG1-344D3FB-C21C**
	2.2	3	5.6	3	5	7.6	**DG1-345D6FB-C21C**
	3	5	7.6	4	—	9	**DG1-347D6FB-C21C**
	4	—	9	5.5	7.5	12	**DG1-349D0FB-C21C**
FR2	5.5	7.5	12	7.5	10	16	**DG1-34012FB-C21C**
	7.5	10	16	11	15	23	**DG1-34016FB-C21C**
	11	15	23	15	20	31	**DG1-34023FB-C21C**
FR3	15	20	31	18.5	25	38	**DG1-34031FB-C21C**
	18.5	25	38	22	30	46	**DG1-34038FB-C21C**
	22	30	46	30	40	61	**DG1-34046FB-C21C**
FR4	30	40	61	37	50	72	**DG1-34061FN-C21C**
	37	50	72	45	60	87	**DG1-34072FN-C21C**
	45	60	87	55	75	105	**DG1-34087FN-C21C**
FR5	55	75	105	75	100	140	**DG1-34105FN-C21C**
	75	100	140	90	125	170	**DG1-34140FN-C21C**
	90	125	170	110	150	205	**DG1-34170FN-C21C**
FR6	110	150	205	132	200	261	**DG1-34205FN-C21C**
	132	200	245	160	250	310	**DG1-34245FN-C21C**

PowerXL Series—DG1

Type 12/IP54

	Constant Torque (CT) / High Overload (I_H)			Variable Torque (VT) / Low Overload (I_L)			
Frame Size	**400 V, 50 Hz kW Rating**	**460 V, 60 Hz hp**	**Current A**	**400 V, 50 Hz kW Rating**	**460 V, 60 Hz hp**	**Current A**	**Catalog Number**
FR1	0.75	1	2.2	1.1	1.5	3.3	**DG1-342D2FB-C54C**
	1.1	1.5	3.3	1.5	2	4.3	**DG1-343D3FB-C54C**
	1.5	2	4.3	2.2	3	5.6	**DG1-344D3FB-C54C**
	2.2	3	5.6	3	5	7.6	**DG1-345D6FB-C54C**
	3	5	7.6	4	—	9	**DG1-347D6FB-C54C**
	4	—	9	5.5	7.5	12	**DG1-349D0FB-C54C**
FR2	5.5	7.5	12	7.5	10	16	**DG1-34012FB-C54C**
	7.5	10	16	11	15	23	**DG1-34016FB-C54C**
	11	15	23	15	20	31	**DG1-34023FB-C54C**
FR3	15	20	31	18.5	25	38	**DG1-34031FB-C54C**
	18.5	25	38	22	30	46	**DG1-34038FB-C54C**
	22	30	46	30	40	61	**DG1-34046FB-C54C**
FR4	30	40	61	37	50	72	**DG1-34061FN-C54C**
	37	50	72	45	60	87	**DG1-34072FN-C54C**
	45	60	87	55	75	105	**DG1-34087FN-C54C**
FR5	55	75	105	75	100	140	**DG1-34105FN-C54C**
	75	100	140	90	125	170	**DG1-34140FN-C54C**
	90	125	170	110	150	205	**DG1-34170FN-C54C**
FR6	110	150	205	132	200	261	**DG1-34205FN-C54C**
	132	200	245	160	250	310	**DG1-34245FN-C54C**

DG1 Series Drives—575 Volt

PowerXL Series—DG1

Type 1/IP21

	Constant Torque (CT) / High Overload (I_H)			Variable Torque (VT) / Low Overload (I_L)			
Frame Size	**575 V, 60 Hz kW Rating**	**575 V, 60 Hz hp**	**Current A**	**575 V, 60 Hz kW Rating**	**575 V, 60 Hz hp**	**Current A**	**Catalog Number**
FR1	1.5	2	3.3	2.2	3	4.5	**DG1-353D3FB-C21C**
	2.2	3	4.5	3.7	5	7.5	**DG1-354D5FB-C21C**
	3.7	5	7.5	5.5	7.5	10	**DG1-357D5FB-C21C**
FR2	5.5	7.5	10	7.5	10	13.5	**DG1-35010FB-C21C**
	7.5	10	13.5	11	15	18	**DG1-35013FB-C21C**
	11	15	18	15	20	22	**DG1-35018FB-C21C**
FR3	15	20	22	18.5	25	27	**DG1-35022FB-C21C**
	18.5	25	27	22	30	34	**DG1-35027FB-C21C**
	22	30	34	30	40	41	**DG1-35034FB-C21C**
FR4	30	40	41	37	50	52	**DG1-35041FN-C21C**
	37	50	52	45	60	62	**DG1-35052FN-C21C**
	45	60	62	55	75	80	**DG1-35062FN-C21C**
FR5	55	75	80	75	100	100	**DG1-35080FN-C21C**
	75	100	100	90	125	125	**DG1-35100FN-C21C**
	90	125	125	110	150	144	**DG1-35125FN-C21C**
FR6	110	150	144	150	200	208	**DG1-35144FN-C21C**
	132	200	208	187	250	250	**DG1-35208FN-C21C**

PowerXL Series—DG1

Type 12/IP54

	Constant Torque (CT) / High Overload (I_H)			Variable Torque (VT) / Low Overload (I_L)			
Frame Size	**575 V, 60 Hz kW Rating**	**575 V, 60 Hz hp**	**Current A**	**575 V, 60 Hz kW Rating**	**575 V, 60 Hz hp**	**Current A**	**Catalog Number**
FR1	1.5	2	3.3	2.2	3	4.5	**DG1-353D3FB-C54C**
	2.2	3	4.5	3.7	5	7.5	**DG1-354D5FB-C54C**
	3.7	5	7.5	5.5	7.5	10	**DG1-357D5FB-C54C**
FR2	5.5	7.5	10	7.5	10	13.5	**DG1-35010FB-C54C**
	7.5	10	13.5	11	15	18	**DG1-35013FB-C54C**
	11	15	18	15	20	22	**DG1-35018FB-C54C**
FR3	15	20	22	18.5	25	27	**DG1-35022FB-C54C**
	18.5	25	27	22	30	34	**DG1-35027FB-C54C**
	22	30	34	30	40	41	**DG1-35034FB-C54C**
FR4	30	40	41	37	50	52	**DG1-35041FN-C54C**
	37	50	52	45	60	62	**DG1-35052FN-C54C**
	45	60	62	55	75	80	**DG1-35062FN-C54C**
FR5	55	75	80	75	100	100	**DG1-35080FN-C54C**
	75	100	100	90	125	125	**DG1-35100FN-C54C**
	90	125	125	110	150	144	**DG1-35125FN-C54C**
FR6	110	150	144	150	200	208	**DG1-35144FN-C54C**
	132	200	208	187	250	250	**DG1-35208FN-C54C**

Accessories

The PowerXL Series—DG1 drives can accommodate a wide selection of expander and adapter option boards to customize the drive for your application needs. The drive's control unit is designed to accept a total of two additional option boards.

The PowerXL Series—DG1 drives come with a factory-installed standard board configuration including the following:

- Standard I/O:
  - 8DI, 1DO
  - 2AI, 2AO
  - 2FC, 1FA relays
- Standard communications:
  - EtherNet/IP, Modbus TCP
  - RS-485: Modbus RTU, BACnet MS/TP

PowerXL Series—DG1 I/O Card Kits

Description	Catalog Number
3 x DI, 3 x DO, 1 x thermistor, 24 Vdc/EXT option card	**DXG-EXT-3DI3DO1T**
1 x AI, 2 x AO (isolated to control board) option card	**DXG-EXT-1AI2AO**
3 x relay dry contact (2NO + 1NO/NC) option card	**DXG-EXT-3RO**
3 x PT100 RTD thermistor input option card	**DXG-EXT-THER1**
6 x DI 240 Vac input option card	**DXG-EXT-6DI**

PowerXL Series—DG1 Communication Card Kits

Description	Catalog Number
PROFIBUS-DP communication card	**DXG-NET-PROFB**
CANopen communication card	**DXG-NET-CANOPEN**
DeviceNet communication card	**DXG-NET-DEVICENET**
PROFIBUS DB9 to 5-pin adapter card	**DXG-NET-PROAD**
SmartWire communication card and module	**DXG-NET-SWD** ①

PowerXL Series—DG1 Keypad Kits

Description	Catalog Number
Standard keypad	**DXG-KEY-LCD**
Remote keypad kit (IP 54 rated keypad holder and 3 m cable)	**DXG-KEY-RMTKIT**
1 m remote keypad cable	**DXG-CBL-1M0**
3 m remote keypad cable	**DXG-CBL-3M0**
Remote keypad mounting holder only	**DXG-KEY-HOLDER**
Type 12/IP54 keypad hole plug (maintain rating without keypad)	**DXG-KEY-N12PLUG**

PowerXL Series—DG1 Conversion and Flange Kits

The Type 12/IP54 option kit is used to convert a Type 1/IP21 to a Type 12/IP54 drive. The kit includes cover, fan and grommets.

Type 12/IP54 Conversion Kits ②

Description	Catalog Number
Frame 1 230 V Type 12/IP54 kit	**DXG-ACC-2FR1N12KIT**
Frame 1 480 V Type 12/IP54 kit	**DXG-ACC-4FR1N12KIT**
Frame 2 Type 12/IP54 kit	**DXG-ACC-FR2N12KIT**

The flange kit is used when the power section heat sink is mounted through the back panel of an enclosure. The kit includes hardware, top flange plate, bottom flange plate and two side flange plates.

Flange Kits

Description	Catalog Number
Frame 1 flange kit Type 12/IP54	**DXG-ACC-FR1N12FK**
Frame 2 flange kit Type 12/IP54	**DXG-ACC-FR2N12FK**
Frame 3 flange kit Type 12/IP54	**DXG-ACC-FR3N12FK**
Frame 4 flange kit Type 12/IP54	**DXG-ACC-FR4N12FK**
Frame 5 flange kit Type 12/IP54	**DXG-ACC-FR5N12FK**
Frame 6 flange kit Type 12/IP54	**DXG-ACC-FR6N12FK**

PowerXL Series—DG1 Demo Units

Demo Units

Description	Catalog Number
DG1 control module demo stand	**DG1-DEMO1**
DG1 full drive demo case	**DG1-DEMO2**

Notes

① Available January 2017.

② NEMA 12 DG1 drives from W34 are available within 3 business days.

Power Xpert *in*Control Software

The PowerXL Series PC Tool is designed for programming, controlling and monitoring of the DG1 drives. Features include loading parameters that can be saved to a file or printed, setting references, starting and stopping the motor, monitoring signals in graphical or text form, and real-time display.

PowerXpert *in*Control Software

Description	Catalog Number
Software kit (software, cable, manual)	**DXG-ACC-SOFTWARE**
Software cable (USB to keypad [RJ45])	**DXG-CBL-PCCABLE**
Real-time clock battery (approximately 10,000 hours life)	**DXG-ACC-RTBATT**

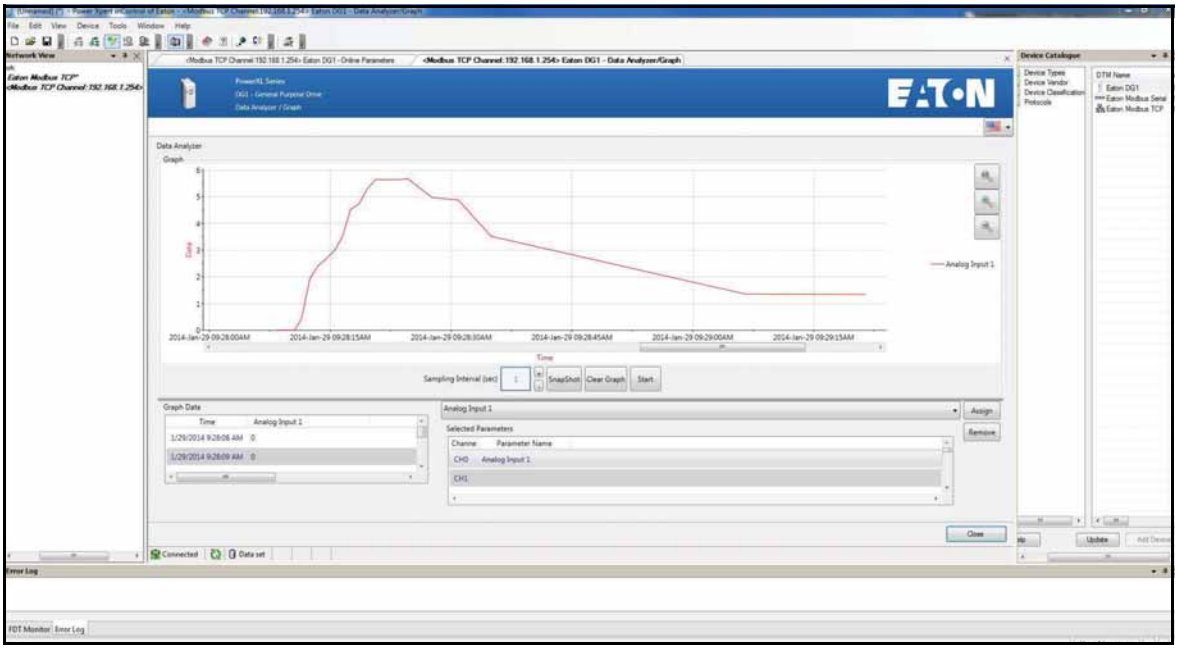

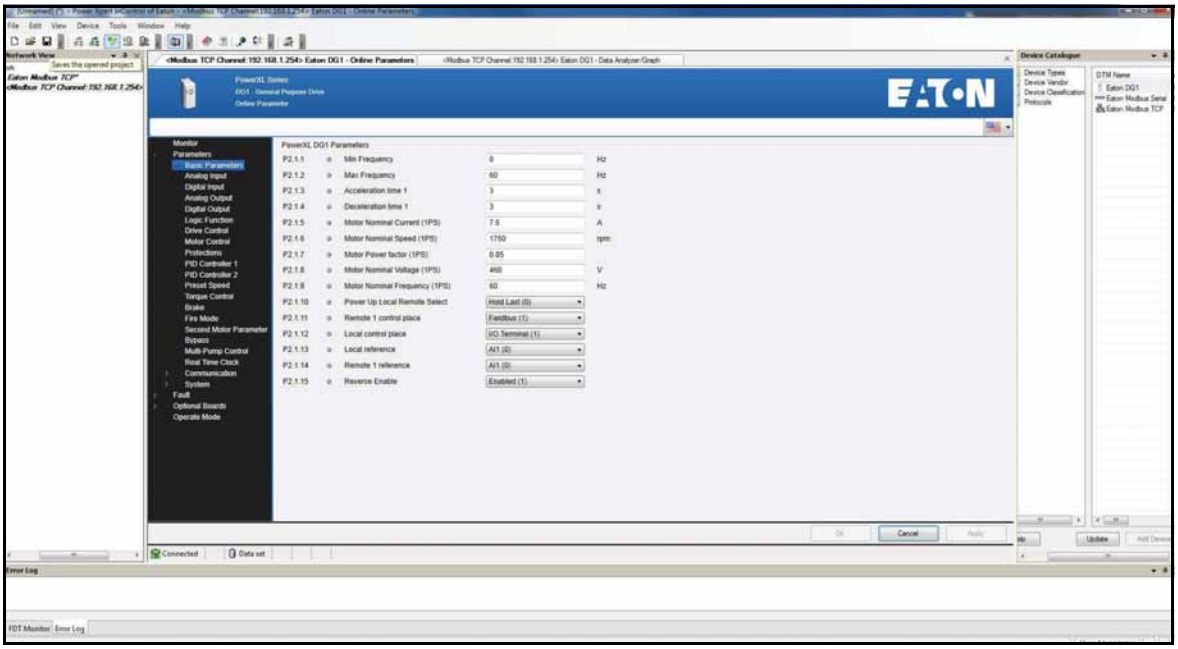

Brake Chopper Options

The brake chopper circuit option is used for applications that require dynamic braking. Dynamic braking resistors are not included with drive purchase. Consult the factory for additional dynamic braking resistor selections that are supplied separately. A list of common resistors are listed below and are complete indoor assemblies, include a pre-wired terminal block and a thermal switch, and are not UL Listed.

Duty Cycle

The duty cycle rating is based on a 60-second period. For example, the 20% duty cycle resistor can carry 100% current for 12 seconds out of every 60 seconds, while the 50% duty cycle resistor can carry 150% current for 30 seconds out of every 60 seconds.

Torque

If the braking torque required is less than 15%, dynamic braking is not required because the regenerated energy will be dissipated in the drive and motor losses.

Dynamic Brake Resistor—Catalog Number Selection

DBR – R100 – W0800

Dynamic Brake Resistor	Resistance	Rated Watts
	1D0 = 1.0 Ohms **100** = 100 Ohms	**0800** = 800 Watts **8000** = 8000 Watts **080K** = 80,000 Watts

230 V Brake Resistors

Drive hp (CT/I_H)	Minimum Ohms	20% Duty Cycle, 100% Torque Catalog Number	Dimensions	50% Duty Cycle, 150% Torque Catalog Number	Dimensions
0.75	15.0	**DBR-R100-W0400**	12W x 5D x 5H	**DBR-R100-W0800**	12W x 7D x 5H
1	15.0	**DBR-R100-W0400**	12W x 5D x 5H	**DBR-R100-W0800**	12W x 7D x 5H
1.5	15.0	**DBR-R100-W0400**	12W x 5D x 5H	**DBR-R036-W1200**	12W x 10D x 5H
2	15.0	**DBR-R100-W0400**	12W x 5D x 5H	**DBR-R036-W1200**	12W x 10D x 5H
3	15.0	**DBR-R036-W0800**	12W x 7D x 5H	**DBR-R036-W2000**	12W x 16D x 5H
4	9.0	**DBR-R036-W0800**	12W x 7D x 5H	**DBR-R012-W2400**	19W x 10D x 5H
5	9.0	**DBR-R036-W0800**	12W x 7D x 5H	**DBR-R020-W2800**	19W x 13D x 5H
7.5	9.0	**DBR-R020-W1200**	12W x 10D x 5H	**DBR-R012-W4800**	26.5W x 10D x 5H
10	7.0	**DBR-R015-W1600**	12W x 13D x 5H	**DBR-R112-W6000**	26.5W x 13D x 5H
15	7.0	**DBR-R012-W2400**	19W x 10D x 5H	**DBR-R7D8-W9000**	28W x 10D x 10H
20	2.0	**DBR-R9D3-W3200**	19W x 10D x 5H	**DBR-R3D4-W012K**	28W x 10D x 10H
25	2.0	**DBR-R5D5-W4000**	26.5W x 10D x 5H	**DBR-R5D1-W015K**	28W x 16D x 10H
30	2.0	**DBR-R4D8-W4800**	26.5W x 10D x 5H	**DBR-R4D1-W020K**	28W x 16D x 10H
40	2.0	**DBR-R004-W6000**	26.5W x 13D x 5H	**DBR-R3D4-W025K**	30W x 18D x 16H
50	2.0	**DBR-R3D1-W7500**	26.5W x 16D x 5H	**DBR-R2D1-W030K**	30W x 18D x 24H
60	2.0	**DBR-R2D8-W9000**	26.5W x 16D x 5H	**DBR-R002-W036K**	30W x 18D x 24H
75	2.0	**DBR-R2D6-W012K**	28W x 10D x 10H	**DBR-R002-W045K**	30W x 18D x 32H
100	2.0	**DBR-R002-W015K**	28W x 16D x 10H	**DBR-R002-W060K**	30W x 18D x 48H

480 V Brake Resistors

Drive hp (CT/I_H)	Minimum Ohms	20% Duty Cycle, 100% Torque Catalog Number	Dimensions	50% Duty Cycle, 150% Torque Catalog Number	Dimensions
1	36.0	**DBR-R100-W0400**	12W x 5D x 5H	**DBR-R100-W0800**	12W x 7D x 5H
1.5	36.0	**DBR-R100-W0400**	12W x 5D x 5H	**DBR-R100-W1200**	12W x 10D x 5H
2	36.0	**DBR-R100-W0400**	12W x 5D x 5H	**DBR-R100-W1200**	12W x 10D x 5H
3	36.0	**DBR-R100-W0800**	12W x 7D x 5H	**DBR-R100-W2000**	12W x 16D x 5H
5	36.0	**DBR-R100-W0800**	12W x 7D x 5H	**DBR-R100-W2800**	19W x 13D x 5H
6	36.0	**DBR-R100-W1200**	12W x 10D x 5H	**DBR-R070-W4000**	19W x 16D x 5H
7.5	18.0	**DBR-R100-W1200**	12W x 10D x 5H	**DBR-R020-W4800**	26.5W x 13D x 5H
10	18.0	**DBR-R063-W1600**	12W x 13D x 5H	**DBR-R030-W6000**	26.5W x 16D x 5H
15	18.0	**DBR-R030-W2400**	19W x 10D x 5H	**DBR-R030-W9000**	28W x 10D x 10H
20	13.0	**DBR-R030-W3200**	19W x 13D x 5H	**DBR-R023-W012K**	28W x 13D x 10H
25	13.0	**DBR-R030-W4000**	19W x 16D x 5H	**DBR-R013-W015K**	28W x 16D x 10H
30	13.0	**DBR-R020-W4800**	26.5W x 13D x 5H	**DBR-R014-W020K**	30W x 18D x 24H
40	2.0	**DBR-R112-W6000**	26.5W x 13D x 5H	**DBR-R007-W025K**	30W x 18D x 16H
50	2.0	**DBR-R013-W7500**	26.5W x 16D x 5H	**DBR-R8D5-W030K**	30W x 18D x 24H
60	2.0	**DBR-R010-W9000**	28W x 10D x 10H	**DBR-R7D3-W036K**	30W x 18D x 24H
75	2.0	**DBR-R009-W012K**	28W x 13D x 10H	**DBR-R002-W045K**	30W x 18D x 32H
100	2.0	**DBR-R5D1-W015K**	28W x 16D x 10H	**DBR-R004-W060K**	30W x 18D x 40H
125	2.0	**DBR-R4D1-W020K**	28W x 16D x 10H	**DBR-R004-W070K**	30W x 18D x 48H
150	2.0	**DBR-R3D4-W025K**	30W x 18D x 16H	**DBR-R3D5-W085K**	30W x 18D x 56H
200	2.0	**DBR-R3D3-W030K**	30W x 18D x 24H	**DBR-R2D6-W110K**	30W x 18D x 64H

575 V Brake Resistors

Drive hp (CT/I_H)	Minimum Ohms	20% Duty Cycle, 100% Torque Catalog Number	Dimensions (Inches)	50% Duty Cycle, 150% Torque Catalog Number	Dimensions (Inches)
2	100.0	**DBR-R100-W0400**	12W x 5D x 5H	**DBR-R100-W1200**	12W x 10D x 5H
3	100.0	**DBR-R100-W0800**	12W x 7D x 5H	**DBR-R100-W2000**	12W x 16D x 5H
4	100.0	**DBR-R100-W0800**	12W x 7D x 5H	**DBR-R100-W2400**	19W x 10D x 5H
5	100.0	**DBR-R100-W0800**	12W x 7D x 5H	**DBR-R100-W2800**	19W x 13D x 5H
7.5	100.0	**DBR-R100-W1200**	12W x 10D x 5H	**DBR-R100-W4800**	26.5W x 13D x 5H
10	30.0	**DBR-R063-W1600**	12W x 13D x 5H	**DBR-R063-W6000**	26.5W x 16D x 5H
15	30.0	**DBR-R042-W2400**	19W x 10D x 5H	**DBR-R042-W9000**	28W x 10D x 10H
20	30.0	**DBR-R030-W3200**	19W x 13D x 5H	**DBR-R030-W012K**	28W x 13D x 10H
25	30.0	**DBR-R030-W4000**	19W x 16D x 5H	**DBR-R030-W015K**	28W x 16D x 10H
30	18.0	**DBR-R020-W4800**	26.5W x 13D x 5H	**DBR-R020-W020K**	30W x 18D x 16H
40	18.0	**DBR-R030-W6000**	26.5W x 16D x 5H	**DBR-R184-W025K**	30W x 18D x 16H
50	9.0	**DBR-R013-W7500**	26.5W x 16D x 5H	**DBR-R012-W030K**	30W x 18D x 24H
60	9.0	**DBR-R010-W9000**	28W x 10D x 10H	**DBR-R010-W036K**	30W x 18D x 24H
75	9.0	**DBR-R009-W012K**	28W x 13D x 10H	**DBR-R009-W045K**	30W x 18D x 24H
100	7.0	**DBR-R013-W015K**	28W x 16D x 10H	**DBR-R8D4-W060K**	30W x 18D x 40H
125	7.0	**DBR-R8D2-W020K**	30W x 18D x 10H	**DBR-R007-W070K**	30W x 18D x 40H
150	7.0	**DBR-R007-W025K**	30W x 18D x 16H	**DBR-R006-W085K**	30W x 18D x 56H
200	2.5	**DBR-R3D3-W030K**	30W x 18D x 24H	**DBR-R2D6-W110K**	30W x 18D x 64H

Line and Load Reactors

A line and load reactor is a three-phase inductance filter that can be placed on the line and load side of the AFD to help improve the harmonic performance of the system. Consult the factory for additional filtering options and further technical details.

DR1 Line Reactor

A line reactor helps to provide a moderate reduction in current harmonics similar to a DC choke. It also provides increased input protection for AFD and its semiconductors from line transients helping to extend the life of the AFD.

DR2 Output Reactor

An output filter is used to reduce the transient voltage (dV/dt) at the motor terminals. The output filter is recommended for cable lengths exceeding 100 ft (30 m) with a drive of 3 hp and above and for cable lengths of 33 ft (10 m) with a drive of 2 hp and below.

Line and Load Reactors—Catalog Number Selection

D R1 – 2 2D0 – 0 5

Basic Naming
D = Drive

Device Series
R1 = Line side reactor
R2 = Load side reactor

Input/Output Voltage
2 = 230 V
4 = 460 V

Current Rating
Examples:
2D0 = 2.0 A
4D0 = 4.0 A
8D0 = 8.0 A
012 = 12 A

Environment Rating
0 = Open
1 = NEMA 1

Impedance
3 = 3%
5 = 5%

Line and Load Reactors—230 V

	Open				NEMA 1			
	Line Reactor		Load Reactor		Line Reactor		Load Reactor	
hp (CT)	3%	5%	3%	5%	3%	5%	3%	5%
0.75	DR1-23D2-03	DR1-23D2-05	DR2-24D0-03	DR2-24D0-05	DR1-23D2-13	DR1-23D2-15	DR2-24D0-13	DR2-24D0-15
1	DR1-24D2-03	DR1-24D2-05	DR2-24D0-03	DR2-28D0-05	DR1-24D2-13	DR1-24D2-15	DR2-24D0-13	DR2-28D0-15
1.5	DR1-26D0-03	DR1-26D0-05	DR2-28D0-03	DR2-28D0-05	DR1-26D0-13	DR1-26D0-15	DR2-28D0-13	DR2-28D0-15
2	DR1-26D8-03	DR1-26D8-05	DR2-28D0-03	DR2-28D0-05	DR1-26D8-13	DR1-26D8-15	DR2-28D0-13	DR2-28D0-15
3	DR1-29D6-03	DR1-29D6-05	DR2-2012-03	DR2-2012-05	DR1-29D6-13	DR1-29D6-15	DR2-2012-13	DR2-2012-15
5	DR1-2015-03	DR1-2015-05	DR2-2018-03	DR2-2018-05	DR1-2015-13	DR1-2015-15	DR2-2018-13	DR2-2018-15
7.5	DR1-2022-03	DR1-2022-05	DR2-2025-03	DR2-2025-05	DR1-2022-13	DR1-2022-15	DR2-2025-13	DR2-2025-15
10	DR1-2028-03	DR1-2028-05	DR2-2035-03	DR2-2035-05	DR1-2028-13	DR1-2028-15	DR2-2035-13	DR2-2035-15
15	DR1-2042-03	DR1-2042-05	DR2-2045-03	DR2-2045-05	DR1-2042-13	DR1-2042-15	DR2-2045-13	DR2-2045-15
20	DR1-2054-03	DR1-2054-05	DR2-2055-03	DR2-2055-05	DR1-2054-13	DR1-2054-15	DR2-2055-13	DR2-2055-15
25	DR1-2068-03	DR1-2068-05	DR2-2080-03	DR2-2080-05	DR1-2068-13	DR1-2068-15	DR2-2080-13	DR2-2080-15
30	DR1-2080-03	DR1-2080-05	DR2-2080-03	DR2-2100-05	DR1-2080-13	DR1-2080-15	DR2-2080-13	DR2-2100-15
40	DR1-2104-03	DR1-2104-05	DR2-2100-03	DR2-2100-05	DR1-2104-13	DR1-2104-15	DR2-2100-13	DR2-2100-15
50	DR1-2130-03	DR1-2130-05	DR2-2130-03	DR2-2130-05	DR1-2130-13	DR1-2130-15	DR2-2130-13	DR2-2130-15
60	DR1-2154-03	DR1-2154-05	DR2-2160-03	DR2-2200-15	DR1-2154-13	DR1-2154-15	DR2-2160-13	DR2-2200-15
75	DR1-2192-03	DR1-2192-05	DR2-2200-13	DR2-2200-15	DR1-2192-13	DR1-2192-15	DR2-2200-13	DR2-2200-15
100	DR1-2248-03	DR1-2248-05	DR2-2225-13	DR2-2225-15	DR1-2248-13	DR1-2248-15	DR2-2225-13	DR2-2225-15

Line and Load Reactors—480 V

	Open				NEMA 1			
	Line Reactor		Load Reactor		Line Reactor		Load Reactor	
hp (CT)	3%	5%	3%	5%	3%	5%	3%	5%
1	DR1-42D1-03	DR1-42D1-05	DR2-42D0-05	DR2-42D0-05	DR1-42D1-13	DR1-42D1-15	DR2-42D0-13	DR2-42D0-15
1.5	DR1-43D0-03	DR1-43D0-05	DR2-44D0-05	DR2-44D0-05	DR1-43D0-13	DR1-43D0-15	DR2-44D0-13	DR2-44D0-15
2	DR1-43D4-03	DR1-43D4-05	DR2-44D0-03	DR2-44D0-05	DR1-43D4-13	DR1-43D4-15	DR2-44D0-13	DR2-44D0-15
3	DR1-44D8-03	DR1-44D8-05	DR2-48D0-03	DR2-48D0-05	DR1-44D8-13	DR1-44D8-15	DR2-48D0-13	DR2-48D0-15
5	DR1-47D6-03	DR1-47D6-05	DR2-48D0-03	DR2-48D0-05	DR1-47D6-13	DR1-47D6-15	DR2-48D0-13	DR2-48D0-15
7.5	DR1-4011-03	DR1-4011-05	DR2-4012-03	DR2-4012-05	DR1-4011-13	DR1-4011-15	DR2-4012-13	DR2-4012-15
10	DR1-4014-03	DR1-4014-05	DR2-4018-03	DR2-4018-05	DR1-4014-13	DR1-4014-15	DR2-4018-13	DR2-4018-15
15	DR1-4021-03	DR1-4021-05	DR2-4025-03	DR2-4025-05	DR1-4021-13	DR1-4021-15	DR2-4025-13	DR2-4025-15
20	DR1-4027-03	DR1-4027-05	DR2-4025-03	DR2-4025-05	DR1-4027-13	DR1-4027-15	DR2-4025-13	DR2-4025-15
25	DR1-4034-03	DR1-4034-05	DR2-4035-03	DR2-4035-05	DR1-4034-13	DR1-4034-15	DR2-4035-13	DR2-4035-15
30	DR1-4040-03	DR1-4040-05	DR2-4045-03	DR2-4045-05	DR1-4040-13	DR1-4040-15	DR2-4045-13	DR2-4045-15
40	DR1-4052-03	DR1-4052-05	DR2-4055-03	DR2-4055-05	DR1-4052-13	DR1-4052-15	DR2-4055-13	DR2-4055-15
50	DR1-4065-03	DR1-4065-05	DR2-4080-03	DR2-4080-05	DR1-4065-13	DR1-4065-15	DR2-4080-13	DR2-4080-15
60	DR1-4077-03	DR1-4077-05	DR2-4100-03	DR2-4080-05	DR1-4077-13	DR1-4077-15	DR2-4100-13	DR2-4080-15
75	DR1-4096-03	DR1-4096-05	DR2-4100-03	DR2-4100-05	DR1-4096-13	DR1-4096-15	DR2-4100-13	DR2-4100-15
100	DR1-4124-03	DR1-4124-05	DR2-4130-03	DR2-4130-05	DR1-4124-13	DR1-4124-15	DR2-4130-13	DR2-4130-15
125	DR1-4156-03	DR1-4156-05	DR2-4160-03	DR2-4160-05	DR1-4156-13	DR1-4156-15	DR2-4160-13	DR2-4160-15
150	DR1-4180-03	DR1-4180-05	DR2-4200-13	DR2-4200-15	DR1-4180-13	DR1-4180-15	DR2-4200-13	DR2-4200-15
200	DR1-4240-03	DR1-4240-05	DR2-4250-13	DR2-4250-15	DR1-4240-13	DR1-4240-15	DR2-4250-13	DR2-4250-15

Line and Load Reactors—575 V

	Open				NEMA 1			
	Line Reactor		Load Reactor		Line Reactor		Load Reactor	
hp (CT)	3%	5%	3%	5%	3%	5%	3%	5%
2	DR1-52D7-03	DR1-52D7-05	DR2-54D0-03	DR2-54D0-05	DR1-52D7-13	DR1-52D7-15	DR2-54D0-13	DR2-54D0-15
3	DR1-53D9-03	DR1-53D9-05	DR2-54D0-03	DR2-54D0-05	DR1-53D9-13	DR1-53D9-15	DR2-54D0-13	DR2-54D0-15
5	DR1-56D1-03	DR1-56D1-05	DR2-58D0-03	DR2-58D0-05	DR1-56D1-13	DR1-56D1-15	DR2-58D0-13	DR2-58D0-15
7.5	DR1-59D0-03	DR1-59D0-05	DR2-58D0-03	DR2-58D0-05	DR1-59D0-13	DR1-59D0-15	DR2-58D0-13	DR2-58D0-15
10	DR1-5011-03	DR1-5011-05	DR2-5012-03	DR2-5012-05	DR1-5011-13	DR1-5011-15	DR2-5012-13	DR2-5012-15
15	DR1-5017-03	DR1-5017-05	DR2-5018-03	DR2-5018-05	DR1-5017-13	DR1-5017-15	DR2-5018-13	DR2-5018-15
20	DR1-5022-03	DR1-5022-05	DR2-5025-03	DR2-5025-05	DR1-5022-13	DR1-5022-15	DR2-5025-13	DR2-5025-15
25	DR1-5027-03	DR1-5027-05	DR2-5025-03	DR2-5025-05	DR1-5027-13	DR1-5027-15	DR2-5025-13	DR2-5025-15
30	DR1-5032-03	DR1-5032-05	DR2-5035-03	DR2-5035-05	DR1-5032-13	DR1-5032-15	DR2-5035-13	DR2-5035-15
40	DR1-5041-03	DR1-5041-05	DR2-5045-03	DR2-5045-05	DR1-5041-13	DR1-5041-15	DR2-5045-13	DR2-5045-15
50	DR1-5052-03	DR1-5052-05	DR2-5055-03	DR2-5055-05	DR1-5052-13	DR1-5052-15	DR2-5055-13	DR2-5055-15
60	DR1-5062-03	DR1-5062-05	DR2-5080-03	DR2-5080-05	DR1-5062-13	DR1-5062-15	DR2-5080-13	DR2-5080-15
75	DR1-5077-03	DR1-5077-05	DR2-5080-03	DR2-5080-05	DR1-5077-13	DR1-5077-15	DR2-5080-13	DR2-5080-15
100	DR1-5100-03	DR1-5100-05	DR2-5100-03	DR2-5100-05	DR1-5100-13	DR1-5100-15	DR2-5100-13	DR2-5100-15
125	DR1-5125-03	DR1-5125-05	DR2-5130-03	DR2-5130-05	DR1-5125-13	DR1-5125-15	DR2-5130-13	DR2-5130-15
150	DR1-5144-03	DR1-5144-05	DR2-5160-03	DR2-5160-05	DR1-5144-13	DR1-5144-15	DR2-5160-13	DR2-5160-15
200	DR1-5192-03	DR1-5192-05	DR2-5200-13	DR2-5200-15	DR1-5192-13	DR1-5192-15	DR2-5200-13	DR2-5200-15

Replacement Parts

Frame 1

Description	230 V Catalog Number	480 V Catalog Number	575 V Catalog Number
Standard keypad	DXG-KEY-LCD	DXG-KEY-LCD	DXG-KEY-LCD
Main control board	DXG-SPR-CTRLBOARD	DXG-SPR-CTRLBOARD	DXG-SPR-CTRLBOARD
Control module kit with keypad ①	DXG-SPR-CTRLKIT	DXG-SPR-CTRLKIT	DXG-SPR-CTRLKIT
Control board cover	DXG-SPR-BCOVER	DXG-SPR-BCOVER	DXG-SPR-BCOVER
Standard cover	DXG-SPR-FR1CVR	DXG-SPR-FR1CVR	DXG-SPR-FR1CVR
Main fan kit ①	DXG-SPR-FR1FAN	DXG-SPR-FR1FAN	DXG-SPR-FR1FAN
Control fan	DXG-SPR-2FR1CF	DXG-SPR-4FR1CF	DXG-SPR-4FR1CF
Main power board	DXG-SPR-2FR1MPB	DXG-SPR-4FR1MPB	DXG-SPR-4FR1MPB
EMI board	DXG-SPR-2FR1EB	DXG-SPR-4FR1EB	DXG-SPR-4FR1EB
Middle chassis cover	DXG-SPR-FR1MCC	DXG-SPR-FR1MCC	DXG-SPR-FR1MCC
Outer housing	DXG-SPR-FR1OH	DXG-SPR-FR1OH	DXG-SPR-FR1OH
UL conduit plate	DXG-SPR-FR1CPUL	DXG-SPR-FR1CPUL	DXG-SPR-FR1CPUL
IEC conduit plate	DXG-SPR-FR1CPIEC	DXG-SPR-FR1CPIEC	DXG-SPR-FR1CPIEC

Frame 2

Description	230 V Catalog Number	480 V Catalog Number	575 V Catalog Number
Standard keypad	DXG-KEY-LCD	DXG-KEY-LCD	DXG-KEY-LCD
Main control board	DXG-SPR-CTRLBOARD	DXG-SPR-CTRLBOARD	DXG-SPR-CTRLBOARD
Control module kit with keypad ①	DXG-SPR-CTRLKIT	DXG-SPR-CTRLKIT	DXG-SPR-CTRLKIT
Control board cover	DXG-SPR-BCOVER	DXG-SPR-BCOVER	DXG-SPR-BCOVER
Standard cover	DXG-SPR-FR2CVR	DXG-SPR-FR2CVR	DXG-SPR-FR2CVR
Main fan kit ①	DXG-SPR-FR2FAN	DXG-SPR-FR2FAN	DXG-SPR-FR2FAN
Control fan	DXG-SPR-FR2CF	DXG-SPR-FR2CF	DXG-SPR-FR2CF
Bus capacitor	DXG-SPR-2FR2BC	DXG-SPR-4FR24BC	DXG-SPR-4FR24BC
Main power board	DXG-SPR-2FR2MPB	DXG-SPR-4FR2MPB	DXG-SPR-4FR2MPB
EMI board	DXG-SPR-2FR2EB	DXG-SPR-4FR2EB	DXG-SPR-4FR2EB
IGBT module	DXG-SPR-FR2IGBT	DXG-SPR-FR2IGBT	DXG-SPR-FR2IGBT
Middle chassis cover	DXG-SPR-FR2MCC	DXG-SPR-FR2MCC	DXG-SPR-FR2MCC
Outer housing	DXG-SPR-FR2OH	DXG-SPR-FR2OH	DXG-SPR-FR2OH
UL conduit plate	DXG-SPR-FR2CPUL	DXG-SPR-FR2CPUL	DXG-SPR-FR2CPUL
IEC conduit plate	DXG-SPR-FR2CPIEC	DXG-SPR-FR2CPIEC	DXG-SPR-FR2CPIEC

Note

① Factory recommended spare parts.

Frame 3

Description	230 V Catalog Number	480 V Catalog Number	575 V Catalog Number
Standard keypad	DXG-KEY-LCD	DXG-KEY-LCD	DXG-KEY-LCD
Main control board	DXG-SPR-CTRLBOARD	DXG-SPR-CTRLBOARD	DXG-SPR-CTRLBOARD
Control module kit with keypad ①	DXG-SPR-CTRLKIT	DXG-SPR-CTRLKIT	DXG-SPR-CTRLKIT
Control board cover	DXG-SPR-BCOVER	DXG-SPR-BCOVER	DXG-SPR-BCOVER
Standard cover	DXG-SPR-FR3CVR	DXG-SPR-FR3CVR	DXG-SPR-FR3CVR
Main fan kit ①	DXG-SPR-FR3FANKIT	DXG-SPR-FR3FANKIT	DXG-SPR-FR3FANKIT
Main fan	DXG-SPR-FR3FAN	DXG-SPR-FR3FAN	DXG-SPR-FR3FAN
Control fan	DXG-SPR-FR34CF	DXG-SPR-FR34CF	DXG-SPR-FR34CF
Bus capacitor	DXG-SPR-FR3BC	DXG-SPR-FR3BC	DXG-SPR-FR3BC
Main power board	DXG-SPR-2FR3MPB	DXG-SPR-4FR3MPB	DXG-SPR-4FR3MPB
EMI board	DXG-SPR-2FR3EB	DXG-SPR-4FR3EB	DXG-SPR-4FR3EB
Drive board	DXG-SPR-2FR3DB	DXG-SPR-4FR3DB	DXG-SPR-4FR3DB
Output board	DXG-SPR-FR3OB	DXG-SPR-FR3OB	DXG-SPR-FR3OB
Middle chassis cover	DXG-SPR-FR3MCC	DXG-SPR-FR3MCC	DXG-SPR-FR3MCC
Outer housing	DXG-SPR-FR3OH	DXG-SPR-FR3OH	DXG-SPR-FR3OH
UL conduit plate	DXG-SPR-FR3CPUL	DXG-SPR-FR3CPUL	DXG-SPR-FR3CPUL
IEC conduit plate	DXG-SPR-FR3CPIEC	DXG-SPR-FR3CPIEC	DXG-SPR-FR3CPIEC

Frame 4

Description	230 V Catalog Number	480 V Catalog Number	575 V Catalog Number
Standard keypad	DXG-KEY-LCD	DXG-KEY-LCD	DXG-KEY-LCD
Main control board	DXG-SPR-CTRLBOARD	DXG-SPR-CTRLBOARD	DXG-SPR-CTRLBOARD
Control module kit with keypad ①	DXG-SPR-CTRLKIT	DXG-SPR-CTRLKIT	DXG-SPR-CTRLKIT
Control board cover	DXG-SPR-BCOVER	DXG-SPR-BCOVER	DXG-SPR-BCOVER
Standard cover	DXG-SPR-FR4CVR	DXG-SPR-FR4CVR	DXG-SPR-FR4CVR
Main fan kit ①	DXG-SPR-FR4FANKIT	DXG-SPR-FR4FANKIT	DXG-SPR-FR4FANKIT
Main fan	DXG-SPR-FR4FAN	DXG-SPR-FR4FAN	DXG-SPR-FR4FAN
Control fan	DXG-SPR-FR34CF	DXG-SPR-FR34CF	DXG-SPR-FR34CF
Bus capacitor	DXG-SPR-2FR4BC	DXG-SPR-4FR24BC	DXG-SPR-4FR24BC
Main power board	DXG-SPR-2FR4MPB	DXG-SPR-4FR4MPB	DXG-SPR-4FR4MPB
EMI board	DXG-SPR-2FR4EB	DXG-SPR-4FR4EB	DXG-SPR-4FR4EB
Softstart board	DXG-SPR-2FR4SB	DXG-SPR-4FR4SB	DXG-SPR-4FR4SB
IGBT module	DXG-SPR-2FR4IGBT	DXG-SPR-4FR4IGBT	DXG-SPR-4FR4IGBT
Rectifier module	DXG-SPR-2FR4RM	DXG-SPR-4FR4RM	DXG-SPR-4FR4RM
Brake chopper module	DXG-SPR-2FR4BCM	DXG-SPR-4FR4BCM	DXG-SPR-4FR4BCM
Middle chassis cover	DXG-SPR-FR4MCC	DXG-SPR-FR4MCC	DXG-SPR-FR4MCC
Outer housing	DXG-SPR-FR4OH	DXG-SPR-FR4OH	DXG-SPR-FR4OH
UL conduit plate	DXG-SPR-FR4CPUL	DXG-SPR-FR4CPUL	DXG-SPR-FR4CPUL
IEC conduit plate	DXG-SPR-FR4CPIEC	DXG-SPR-FR4CPIEC	DXG-SPR-FR4CPIEC

Note

① Factory recommended spare parts.

Frame 5

Description	230 V Catalog Number	480 V Catalog Number	575 V Catalog Number
Standard keypad	DXG-KEY-LCD	DXG-KEY-LCD	DXG-KEY-LCD
Main control board	DXG-SPR-CTRLBOARD	DXG-SPR-CTRLBOARD	DXG-SPR-CTRLBOARD
Control module kit with keypad ①	DXG-SPR-CTRLKIT	DXG-SPR-CTRLKIT	DXG-SPR-CTRLKIT
Control board cover	DXG-SPR-BCOVER	DXG-SPR-BCOVER	DXG-SPR-BCOVER
Standard cover	DXG-SPR-FR5CVR	DXG-SPR-FR5CVR	DXG-SPR-FR5CVR
Main fan kit ①	DXG-SPR-FR5FANKIT	DXG-SPR-FR5FANKIT	DXG-SPR-FR5FANKIT
Main fan	DXG-SPR-FR5FAN	DXG-SPR-FR5FAN	DXG-SPR-FR5FAN
Control fan	DXG-SPR-FR5CF	DXG-SPR-FR5CF	DXG-SPR-FR5CF
Bus capacitor	DXG-SPR-FR5BC	DXG-SPR-FR5BC	DXG-SPR-FR5BC
Main power board	DXG-SPR-2FR5MPB	DXG-SPR-4FR5MPB	DXG-SPR-4FR5MPB
EMI-1 board	DXG-SPR-2FR5E1B	DXG-SPR-4FR5E1B	DXG-SPR-4FR5E1B
EMI-2 board	DXG-SPR-2FR5E2B	DXG-SPR-4FR5E2B	DXG-SPR-4FR5E2B
EMI-3 board	DXG-SPR-FR5E3B	DXG-SPR-FR5E3B	DXG-SPR-FR5E3B
IGBT module	DXG-SPR-FR5IGBT	DXG-SPR-FR5IGBT	DXG-SPR-FR5IGBT
Rectifier module	DXG-SPR-2FR5RM	DXG-SPR-4FR5RM	DXG-SPR-4FR5RM
Brake chopper module	DXG-SPR-2FR5BCM	DXG-SPR-4FR5BCM	DXG-SPR-4FR5BCM
Middle chassis cover	DXG-SPR-FR5MCC	DXG-SPR-FR5MCC	DXG-SPR-FR5MCC
Outer housing	DXG-SPR-FR5OH	DXG-SPR-FR5OH	DXG-SPR-FR5OH
UL conduit plate	DXG-SPR-FR5CPUL	DXG-SPR-FR5CPUL	DXG-SPR-FR5CPUL
IEC conduit plate	DXG-SPR-FR5IECCP	DXG-SPR-FR5IECCP	DXG-SPR-FR5IECCP
DC terminal kit	DXG-SPR-FR5DCKIT	DXG-SPR-FR5DCKIT	DXG-SPR-FR5DCKIT

Frame 6

Description	230 V Catalog Number	480 V Catalog Number	600 V Catalog Number
Standard keypad	DXG-KEY-LCD	DXG-KEY-LCD	DXG-KEY-LCD
Main control board	DXG-SPR-CTRLBOARD	DXG-SPR-CTRLBOARD	DXG-SPR-CTRLBOARD
Control module kit with keypad	DXG-SPR-CTRLKIT	DXG-SPR-CTRLKIT	DXG-SPR-CTRLKIT
Control board cover	DXG-SPR-BCOVER	DXG-SPR-BCOVER	DXG-SPR-BCOVER
Standard cover	DXG-SPR-FR6CVR	DXG-SPR-FR6CVR	DXG-SPR-FR6CVR
Type 12 grommet kit	DXG-SPR-FR6GRN12	DXG-SPR-FR6GRN12	DXG-SPR-FR6GRN12
Main fan kit	DXG-SPR-FR6FANKIT	DXG-SPR-FR6FANKIT	DXG-SPR-FR6FANKIT
Main fain	DXG-SPR-FR6FAN	DXG-SPR-FR6FAN	DXG-SPR-FR6FAN
Control fan	DXG-SPR-FR6CF	DXG-SPR-FR6CF	DXG-SPR-FR6CF
Bus capacitor	DXG-SPR-FR6BC	DXG-SPR-FR6BC	DXG-SPR-5FR6BC
Main power board	DXG-SPR-2FR6MPB	DXG-SPR-4FR6MPB	DXG-SPR-5FR6MPB
EMI board	DXG-SPR-FR6EB	DXG-SPR-FR6EB	DXG-SPR-FR6EB
IGBT module	DXG-SPR-2FR6IGBT	DXG-SPR-4FR6IGBT	DXG-SPR-5FR6IGBT
Rectifier module	DXG-SPR-FR6RM	DXG-SPR-FR6RM	DXG-SPR-5FR6RM
Middle chassis cover	DXG-SPR-FR6MCC	DXG-SPR-FR6MCC	DXG-SPR-FR6MCC
Outer housing	DXG-SPR-FR6OH	DXG-SPR-FR6OH	DXG-SPR-FR6OH
UL conduit plate	DXG-SPR-FR6CPUL	DXG-SPR-FR6CPUL	DXG-SPR-FR6CPUL
IEC conduit plate	DXG-SPR-FR6CPIEC	DXG-SPR-FR6CPIEC	DXG-SPR-FR6CPIEC
Softstart board	DXG-SPR-2FR6SB	DXG-SPR-4FR6SB	DXG-SPR-5FR6SB
Rectifier snubber board	DXG-SPR-2FR6RSB	DXG-SPR-4FR6RSB	DXG-SPR-5FR6RSB
Terminal block kit (1-pole)	DXG-SPR-FR6TB1P	DXG-SPR-FR6TB1P	DXG-SPR-FR6TB1P
Terminal block kit (3-pole)	DXG-SPR-FR6TB3P	DXG-SPR-FR6TB3P	DXG-SPR-FR6TB3P

Note

① Factory recommended spare parts.

Technical Data and Specifications

PowerXL Series—DG1 Technical Data and Specifications

Attribute	Description	Specification
Input ratings	Input voltage U_{in}	208 V to 240 V, 380 V to 500 V, 525 V to 600 V, –15 to 10%
	Input frequency	50 Hz to 60 Hz (variation up to 45 Hz to 66 Hz)
	Connection to power	Once per minute or less
	Starting delay	3 s (FR1 to FR2), 4 s (FR3), 5 s (FR4), 6 s (FR5 and FR6)
	Short-circuit withstand rating	100 kAIC (fuses and circuit breakers); 5 kAIC (without fuses or breakers)
Output ratings	Output voltage	0 to U_{in}
	Continuous output current	I_L: ambient temperature maximum 40 °C, up to 60 °C with derating, overload 1.1 x I_L (1 min./10 min.) I_H: ambient temperature maximum 50 °C, up to 60 °C with derating, overload 1.5 x I_H (1 min./10 min.)
	Overload current	150% of drive rating for constant torque, 110% for variable torque
	Initial output current	200% (2 s / 20 s)
	Output frequency	0–400 Hz (standard)
	Frequency resolution	0.01 Hz
Control characteristics	Control methods	Frequency control Speed control Open-loop speed control Open-loop torque control
	Switching frequency	230 V / 480 V range: FR1–3: 1 kHz to 12 kHz FR4–6: 1 kHz to 10 kHz 230 V / 480 V defaults: FR1–3: 4 kHz FR4–5: 3.6 kHz FR6: 2 kHz 575 V range: FR1–6: 1 kHz to 6 kHz 575 V defaults: FR1–4: 3 kHz FR5–6: 2 kHz Automatic switching frequency derating in case of overload.
	Frequency reference	Analog input: resolution 0.1% (10-bit), accuracy +1% Analog output: resolution 0.1% (10-bit), accuracy +1% Panel reference: resolution 0.01 Hz
	Field weakening point	20 Hz to 400 Hz
	Acceleration time	0.1 s to 3000 s
	Deceleration time	0.1 s to 3000 s
	Braking torque	DC brake: 30% x Motor Rated Torque (Tn) (without brake chopper) Dynamic braking (with optional brake chopper using an external brake resistor): 100% continuous maximum rating
Ambient conditions	Ambient operating temperature	–10 °C (no frost) to +50 °C, up to +60 °C with derating (CT) –10 °C (no frost) to +40 °C, up to +60 °C with derating (VT)
	Storage temperature	–40 °C to +70 °C
	Relative humidity	0–95% RH, noncondensing, non-corrosive
	Air quality: • Chemical vapors • Mechanical particles	Tested according to IEC 60068-2-60 Test Key: Flowing mixed gas corrosion test, Method 1 (H2S [hydrogen sulfide] and SO2 [sulfur dioxide]) Designed according to: IEC 60721-3-3, unit in operation, class 3C2 IEC 60721-3-3, unit in operation, class 3S2
	Altitude	100% load capacity (no derating) up to 3280 ft (1000 m); 1% derating for each 328 ft (100 m) above 3280 ft (1000 m); max. 9842 ft (3000 m) (2000 m for corner grounded earth main systems) For 575 V product, maximum altitude is 6561 ft (2000 m) regardless of main system

PowerXL Series—DG1 Technical Data and Specifications, continued

Attribute	Description	Specification
Ambient conditions, continued	Vibration: • EN 61800-5-1 • EN 60668-2-6	5–150 Hz Displacement amplitude: 1 mm (peak) at 5 Hz to 15.8 Hz (FR1–FR6) Maximum acceleration amplitude: 1g at 15.8 Hz to 150 Hz (FR1–FR6)
	Shock: • ISTA 1 A • EN 60068-2-27	Storage and shipping: maximum 15 g, 11 ms (in package)
	Overvoltage	Overvoltage Category III
	Pollution degree	Pollution Degree 2
	Enclosure class	IP21/Type 1 standard in entire kW/hp range IP54/Type 12 option Note: Keypad or keypad hole plug required to be mounted in drive for IP54/Type 12 rating
	Immunity	Fulfills EN 61800-3 (2004), first and second environment
	MTBF	FR1: 165,457 hours FR2: 134,833 hours FR3: 102,515 hours FR4: 121,567 hours FR5: 108,189 hours FR6: 100,000 hours
	Noise	FR1: 51.2 dB FR2: 58.6 dB FR3: 61.0 dB FR4: 68.0 dB FR5: 69.1 dB FR6: 73.2 dB
Standards	Safety	UL 508C, CSA C22.2 No. 274-13 and EN 61800-5-1
	EMC	+EMC2: EN 61800-3 (2004), Category C2 The drive can be modified for IT networks and corner grounding TN system
	Electrostatic discharge	Second environment, IEC 61000-4-2, 4 kV CD or 8 kV AD, Criterion B
	Fast transient burst	Second environment, IEC 61000-4-4, 2 kV/5 kHz, Criterion B
	Dielectrical strength	Primary to secondary: 3600 Vac/5100 Vdc Primary to earth: 2000 Vac/2828 Vdc
	Approvals	EAC, RCM (C-Tick), RoHS, CE, UL and cUL (see nameplate for more detailed approvals)
Fieldbus connections		Onboard: EtherNet/IP, Modbus® TCP, Modbus RTU, BACnet

PowerXL Series—DG1 Technical Data and Specifications, continued

Attribute	Description	Specification
Safety/protections	Overvoltage protection	Yes
	Overvoltage trip limit	230 V drives: 456 V 480 V drives: 911 V 575 V drives: 1100 V
	Undervoltage protection	Yes
	Undervoltage trip limit	230 V drives: 211 V 480 V drives: 370 V 575 V drives: 550 V
	Earth fault protection	Yes Default: 15% motor FLA Minimum: 0% motor FLA Maximum: 30% motor FLA
	Input phase supervision	Yes
	Motor phase supervision	Yes
	Overcurrent protection	Yes
	Unit overtemperature protection	Yes
	Motor overload protection	Yes
	Motor stall protection	Yes
	Motor underload protection	Yes
	DC bus overvoltage control	Yes
	Short-circuit protection of 24 V reference voltages	Yes
	Surge protection	Yes (differential mode 2 kV; common mode 4 kV 230 V drives: 275 Vac, 10,000 A 480 V drives: 320 Vac, 8000 A 575 V drives: 385 Vac, 10,000 A
	Common coated boards	Yes (prevents corrosion)

PowerXL Series—DG1 Technical Data and Specifications—Efficiency

230 V

Frame Size	Load Torque	Efficiency VT	CT	Input THDi
FR1	25%	92.10%	90.90%	42.8%
	50%	95.20%	95.20%	35.2%
	100%	96.70%	96.20%	29.9%
FR2	25%	90.80%	94.20%	70.0%
	50%	96.64%	97.09%	46.6%
	100%	97.30%	97.30%	33.3%
FR3	25%	97.23%	97.06%	53.1%
	50%	97.37%	97.17%	43.6%
	100%	97.00%	97.20%	30.8%
FR4	25%	94.60%	94.30%	39.4%
	50%	97.20%	97.10%	32.4%
	100%	97.60%	97.60%	25.6%
FR5	25%	94.5	94.30%	30.50%
	50%	97.80%	97.60%	30.8%
	100%	97.70%	97.80%	25.0%

480 V

Frame Size	Load Torque	Efficiency VT	CT	Input THDi
FR1	25%	93.30%	90.70%	54.0%
	50%	97.10%	96.98%	46.8%
	100%	97.61%	97.67%	35.3%
FR2	25%	95.90%	94.20%	59.8%
	50%	97.81%	98.34%	42.7%
	100%	98.11%	98.20%	33.8%
FR3	25%	96.40%	95.20%	69.2%
	50%	97.87%	97.99%	45.2%
	100%	97.79%	98.15%	32.6%
FR4	25%	98.00%	97.80%	56.5%
	50%	97.97%	97.89%	39.8%
	100%	97.96%	98.17%	31.5%
FR5	25%	97.8	97.60%	50.3%
	50%	98.39%	98.10%	37.0%
	100%	98.14%	98.19%	29.5%

575 V

Frame Size	Load Torque	Efficiency VT	CT	Input THDi
FR1	25%	97.48%	97.25%	62.6%
	50%	97.79%	97.66%	45.6%
	100%	98.10%	97.60%	36.8%
FR2	25%	98.06%	97.98%	60.6%
	50%	98.19%	98.11%	47.2%
	100%	98.20%	98.10%	36.7%
FR3	25%	97.98%	97.77%	78.9%
	50%	98.32%	98.18%	55.5%
	100%	98.10%	98.10%	36.3%
FR4	25%	98.27%	97.96%	66.1%
	50%	98.57%	98.44%	41.6%
	100%	98.30%	98.30%	31.2%
FR5	25%	98.60%	98.50%	52.80%
	50%	98.81%	98.78%	35.9%
	100%	98.60%	98.70%	28.4%

Wiring Diagram

PowerXL Series—DG1 Control Wiring Diagram

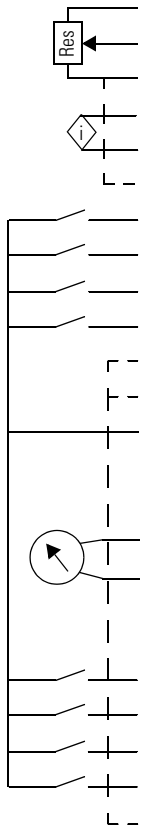

External Wiring	Pin	Signal Name	Signal	Default Setting	Description
	1	+10 V	Ref. Output Voltage	—	10 Vdc Supply Source
	2	AI1+	Analog Input 1	0–10 V	Voltage Speed Reference (Programmable to 4 mA to 20 mA)
	3	AI1–	Analog Input 1 Ground	—	Analog Input 1 Common (Ground)
	4	AI2+	Analog Input 2	4 mA to 20 mA	Current Speed Reference (Programmable to 0–10 V)
	5	AI2–	Analog Input 2 Ground	—	Analog Input 2 Common (Ground)
	6	GND	I/O Signal Ground	—	I/O Ground for Reference and Control
	7	DIN5	Digital Input 5	Preset Speed B0	Sets frequency output to Preset Speed 1
	8	DIN6	Digital Input 6	Preset Speed B1	Sets frequency output to Preset Speed 2
	9	DIN7	Digital Input 7	—	—
	10	DIN8	Digital Input 8	Force Remote (TI+)	Input takes VFD from Local to Remote
	11	CMB	DI5 to DI8 Common	Grounded	Allows source input
	12	GND	I/O Signal Ground	—	I/O Ground for Reference and Control
	13	24 V	+24 Vdc Output	—	Control voltage output (100 mA max.)
	14	DO1	Digital Output 1	Ready	Shows the drive is ready to run
	15	24 Vo	+24 Vdc Output	—	Control voltage output (100 mA max.)
	16	GND	I/O Signal Ground	—	I/O Ground for Reference and Control
	17	AO1+	Analog Output 1	Output Frequency	Shows Output frequency to motor 0–60 Hz (4 mA to 20 mA)
	18	AO2+	Analog Output 2	Motor Current	Shows Motor current of motor 0–FLA (4 mA to 20 mA)
	19	24 Vi	+24 Vdc Input	—	External control voltage input
	20	DIN1	Digital Input 1	Run Forward	Input starts drive in forward direction (start enable)
	21	DIN2	Digital Input 2	Run Reverse	Input starts drive in reverse direction (start enable)
	22	DIN3	Digital Input 3	External Fault	Input causes drive to fault
	23	DIN4	Digital Input 4	Fault Reset	Input resets active faults
	24	CMA	DI1 to DI4 Common	Grounded	Allows source input
	25	A	RS-485 Signal A	—	Fieldbus Communication (Modbus, BACnet)
	26	B	RS-485 Signal B	—	Fieldbus Communication (Modbus, BACnet)
	27	R3NO	Relay 3 Normally Open	At Speed	Relay output 3 shows VFD is at Ref. Frequency
	28	R1NC	Relay 1 Normally Closed	Run	Relay output 1 shows VFD is in a run state
	29	R1CM	Relay 1 Common		
	30	R1NO	Relay 1 Normally Open		
	31	R3CM	Relay 3 Common	At Speed	Relay output 3 shows VFD is at Ref. Frequency
	32	R2NC	Relay 2 Normally Closed	Fault	Relay output 2 shows VFD is in a fault state
	33	R2CM	Relay 2 Common		
	34	R2NO	Relay 2 Normally Open		

Notes

The above wiring demonstrates a SINK configuration. It is important that CMA and CMB are wired to ground (as shown by dashed line).
If a SOURCE configuration is desired, wire 24 V to CMA and CMB and close the inputs to ground.
When using the +10 V for AI1, it is important to wire AI1– to ground (as shown by dashed line).
If using +10 V for AI1 or AI2, terminals 3, 5 and 6 need to be jumpered together.

Control Board Layout

PowerXL Series—DG1 Control Board Layout

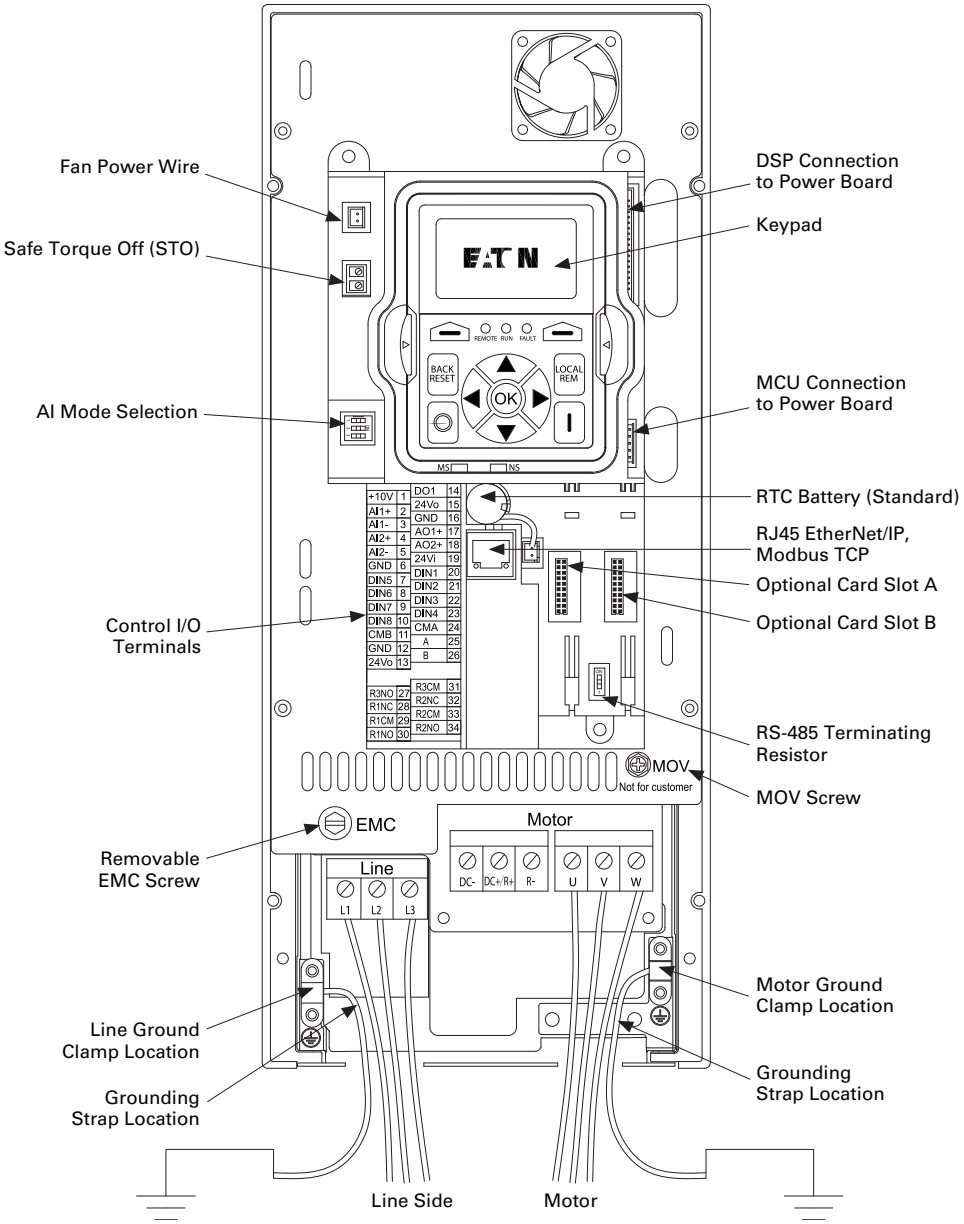

Dimensions

Approximate Dimensions in Inches (mm)

PowerXL Series—DG1 Dimensions

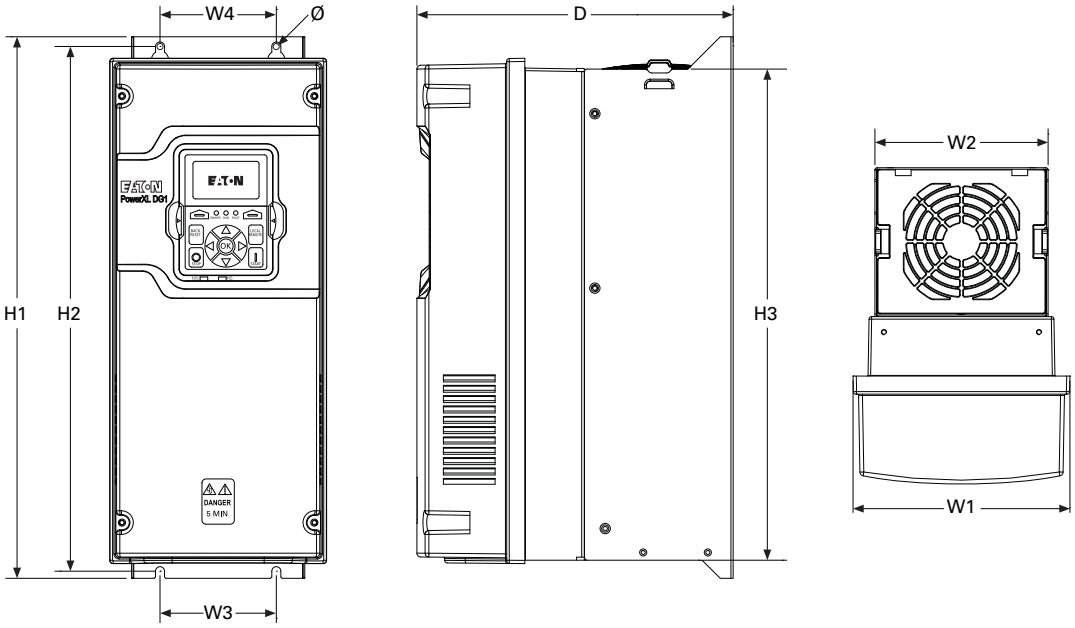

Frame Size	Voltage	hp (CT/I_H)	kW	Amperes (CT/I_H)	Approximate Dimensions in Inches (mm) D	H1	H2	H3	W1	W2	W3	W4	Ø	Weight Lb (kg)
FR1	230 Vac	0.75–3	0.55–2.2	3.5–11	7.91 (200.9)	12.87 (326.9)	12.28 (311.9)	11.50 (292.1)	6.02 (153.0)	4.80 (121.9)	3.94 (100.1)	3.94 (100.1)	0.28 (7.0)	14.33 (6.5)
	480 Vac	1–5	0.75–3.7	2.3–7.6										
	575 Vac	2–5	1.5–3.7	3.3–7.5										
FR2	230 Vac	5–7.5	3–5.5	12.5–25	9.63 (244.7)	16.50 (419.1)	15.98 (405.9)	14.96 (380.0)	6.61 (167.8)	5.28 (134.1)	3.54 (90.0)	3.54 (90.0)	0.28 (7.0)	23.37 (10.6)
	480 Vac	7.5–15	5.5–11	12–23										
	575 Vac	7.5–15	5.5–11	10–18										
FR3	230 Vac	10–15	7.5–11	31–48	10.44 (265.1)	21.97 (558.0)	21.46 (545.0)	20.41 (518.5)	8.06 (204.6)	7.24 (183.9)	4.92 (125.0)	4.92 (125.0)	0.35 (9.0)	49.82 (22.6)
	480 Vac	20–30	15–22	31–46										
	575 Vac	20–30	15–22	22–34										
FR4	230 Vac	20–30	15–22	61–88	11.57 (294.0)	24.80 (629.9)	24.31 (617.5)	23.27 (591.1)	9.36 (237.7)	9.13 (231.9)	8.07 (205.0)	8.07 (205.0)	0.35 (9.0)	77.60 (35.2)
	480 Vac	40–60	30–45	61–87										
	575 Vac	40–60	30–45	41–62										
FR5	230 Vac	40–60	30–45	114–170	13.41 (340.7)	34.98 (888.5)	29.65 (753.1)	27.83 (706.9)	11.34 (288.0)	11.10 (281.9)	8.66 (220.0)	8.66 (220.0)	0.35 (9.0)	154.32 (70.0)
	480 Vac	75–125	55–90	105–170										
	575 Vac	75–125	55–90	80–125										
FR6	230 Vac	75–100	55–75	211–248	14.61 (371.0)	34.04 (864.5)	33.27 (845.0)	40.75 (1035.0)	19.13 (486.0)	18.90 (480.0)	15.75 (400.0)	15.75 (400.0)	0.35 (9.0)	281.3 (127.6)
	480 Vac	150–200	110–150	205–261										
	575 Vac	150–200	110–160	144–208										

DG1 General Purpose Enclosed Drive

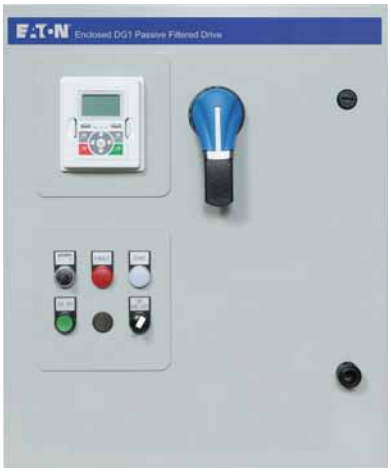

Contents

Description	*Page*
PowerXL DG1 Series Drives	**V6-T2-48**
PowerXL DG1 Series Enclosed Drives	
Catalog Number Selection	**V6-T2-70**
Production Selection	**V6-T2-72**
Enclosure Selection	**V6-T2-76**
Accessories	**V6-T2-77**
Options	**V6-T2-78**
Technical Data and Specifications	**V6-T2-79**
Wiring Diagram	**V6-T2-81**
Dimensions	**V6-T2-82**

PowerXL DG1 Series Enclosed Drives

Product Description

The DG1 Enclosed Drive family incorporates the latest Eaton drive technology into pre-engineered enclosed solutions covering the industry's most common applications. Using the benefits of the PowerXL DG1, the enclosed family provides enhanced user safety with the Safe Torque feature as well as industry-leading energy efficiency from the patented Active Energy Control algorithm. Eaton further raises the bar by providing customers with industry best lead times with the Rapid Response System. This system allows customers to select from 9 million standard configurations that have been pre-engineered with each configuration having a set lead time. The Rapid Response System delivers an improved quotation process and a faster delivery.

Features and Benefits

- Dual rated for both constant torque (CT) / high overload (I_H) and variable torque (VT) / low overload applications
- Optional Brake Chopper for external braking applications
- Available circuit breaker, motor circuit protector, fused disconnect, isolation fusing and surge protection device options to provide input power protection
- Optional 3% input and output reactors provide a reduction in voltage and current harmonics on both line and load side
- Bypass options include a standard three-contactor design and a reduced voltage soft starter design
- Output contactor option provides a means for positive disconnection of the drive output from the motor terminals
- MotoRX and dV/dt filter options are used to reduce transients voltages at the motor terminals
- Customizable cover control options
- Padlockable disconnect
- The PowerXL DG1 comes standard with the following communication protocols:
  - EtherNet/IP
  - Modbus/TCP
  - Modbus RTU
  - BACnet MS/TP

Communication Options

- PROFIBUS-DP
- LonWorks
- CANopen
- DeviceNet

Enclosure Ratings

- NEMA Type 1
- NEMA Type 12
- NEMA Type 3R

Mounting

- Wall mount
- Floor mount: 12-inch legs
- Floor mount: 22-inch legs

Product Range

- 208 V: 0.75–100 hp
- 230 V: 0.75–125 hp
- 480 V: 1–250 hp
- 230 V single-phase: 1–30 hp
- 480 V single-phase: 1.5–60 hp

Standards and Certifications

- UL 508C

Listed

Catalog Number Selection

Catalog Number Selection is for reference only. Not all option combinations may be available.

2

DG1 Enclosed—Base Catalog Number

EGS 3D5 1 D 1 _ _ _ _ _ _

Product Family

EGS = Enclosed DG1 drives—standard

Output Ampere Rating

208 V	230 V	480 V
3D5 = 3.5 A, 0.75 hp	**3D2** = 3.2 A, 0.75 hp	**2D1** = 2.1 A, 1 hp
4D6 = 4.6 A, 1 hp	**4D2** = 4.2 A, 1 hp	**3D0** = 3.0 A, 1.5 hp
6D6 = 6.6 A, 1.5 hp	**6D0** = 6.0 A, 1.5 hp	**3D4** = 3.4 A, 2 hp
7D5 = 7.5 A, 2 hp	**6D8** = 6.8 A, 2 hp	**4D8** = 4.8 A, 3 hp
010 = 10.6 A, 3 hp	**9D6** = 9.6 A, 3 hp	**7D6** = 7.6 A, 5 hp
016 = 16.7 A, 5 hp	**015** = 15.2, 5 hp	**011** = 11 A, 7.5 hp
024 = 24.2 A, 7.5 hp	**022** = 22 A, 7.5 hp	**014** = 14 A, 10 hp
030 = 30.8 A, 10 hp	**028** = 28 A, 10 hp	**021** = 21 A, 15 hp
046 = 46.2 A, 15 hp	**042** = 42 A, 15 hp	**027** = 27 A, 20 hp
059 = 59.4 A, 20 hp	**054** = 54 A, 20 hp	**034** = 34 A, 25 hp
074 = 74.8 A, 25 hp	**068** = 68 A, 25 hp	**040** = 40 A, 30 hp
088 = 88 A, 30 hp	**080** = 80 A, 30 hp	**052** = 52 A, 40 hp
114 = 114 A, 40 hp	**104** = 104 A, 40 hp	**065** = 65 A, 50 hp
143 = 143 A, 50 hp	**130** = 130 A, 50 hp	**077** = 77 A, 60 hp
169 = 169 A, 60 hp	**154** = 154 A, 60 hp	**096** = 96 A, 75 hp
211 = 211 A, 75 hp	**192** = 192 A, 75 hp	**124** = 124 A, 100 hp
273 = 273 A, 100 hp	**248** = 248 A, 100 hp	**156** = 156 A, 125 hp
	312 = 312 A, 125 hp	**180** = 180 A, 150 hp
		240 = 240 A, 200 hp
		302 = 302 A, 250 hp

Phasing, Voltage

1 = Input: Three-phase, 208 V Output: Three-phase	**5** = Input: Three-phase, 575 V Output: Three-phase
2 = Input: Three-phase, 230 V Output: Three-phase	**J** = Input: Single-phase, 230 V Output: Three-phase
4 = Input: Three-phase, 480 V Output: Three-phase	**K** = Input: Single-phase, 480 V Output: Three-phase

Braking Application ①

A = No brake chopper, low overload
B = Brake chopper, low overload
C = No brake chopper, high overload
D = Brake chopper, high overload

Enclosure Rating ②

1 = NEMA Type 1
2 = NEMA Type 12
3 = NEMA Type 3R
6 = NEMA Type 1 Filtered and gasketed
• = Custom option

Options ③

See **Page V6-T2-71** for catalog number option selection.

Notes

① Brake chopper is a factory-installed option only. Braking resistors sold separately. See DG1 drives starting on **Page V6-T2-55** for selection.
② Additional enclosure options including NEMA 4, 4X, 7 and 9 are available. Please contact the factory for configuration and pricing.
③ Part number configuration continued on the following page.

Catalog Number Selection is for reference only. Not all option combinations may be available.

DG1 Enclosed—Catalog Number Options

EGS 3D5 1 D 1 — 2 0 0 B 1 0 0 0 0

Base Catalog Number Example

See **Page V6-T2-70** for base catalog number selection.

Power Disconnect Options

0 = None
1 = MCP disconnect ①
2 = Circuit breaker
3 = Circuit breaker/isolation fusing
4 = Circuit breaker/isolation fusing/3% input reactor
5 = Circuit breaker/isolation fusing/SPD
6 = Circuit breaker/isolation fusing/SPD/3% input reactor
7 = Circuit breaker/3% input reactor
8 = Circuit breaker/SPD
9 = Circuit breaker/SPD/3% input reactor
A = Fused disconnect
B = Fused disconnect/SPD
C = Fused disconnect/SPD/3% input reactor
D = Fused disconnect/3% input reactor
E = Isolation fuses
F = Isolation fuses/3% input reactor
G = Isolation fuses/SPD
H = Isolation fuses/SPD/3% input reactor
• = Custom option ②

Bypass Options ③

0 = None
1 = Manual HOA bypass
2 = Manual HOA bypass/isolation fusing
3 = Manual HOA bypass/isolation fusing/3% input reactor
4 = Manual HOA bypass/isolation fusing/SPD
5 = Manual HOA bypass/isolation fusing/SPD/3% input reactor
6 = Manual HOA bypass/3% input reactor
7 = Manual HOA bypass/SPD
8 = Manual HOA bypass/SPD/3% input reactor
H = Manual HOA RVSS bypass
J = Manual HOA RVSS bypass/isolation fusing
K = Manual HOA RVSS bypass/isolation fusing/3% input reactor
L = Manual HOA RVSS bypass/isolation fusing/SPD
M = Manual HOA RVSS bypass/isolation fusing/SPD/3% input reactor
N = Manual HOA RVSS bypass/3% input reactor
P = Manual HOA RVSS bypass/SPD
R = Manual HOA RVSS bypass/SPD/3% input reactor
• = Custom option ②

Output Power Options ④

0 = None
A = Output contactor
B = 3% Output reactor
D = dV/dt filter
E = 3% Output Reactor/output contactor
G = dV/dt/output contactor
• = Custom option ②

Control Options ⑤

0 = None
1 = Speed pot
2 = Start-stop pushbutton
3 = Start-stop pushbutton with speed pot
A = HOA switch
B = Start-stop pushbutton with speed pot & HOA switch
C = Start-stop pushbutton with HOA switch
D = HOA switch with speed pot
• = Custom option ②

Light Options ⑤

0 = None
1 = Non-bypass light kit—Power On, Run, Fault
2 = Bypass light kit—On, VFD Run, Fault, Bypass Run
• = Custom option ②

Enclosure Options

0 = None
1 = Floor stand—12 inches
2 = Floor stand—22 inches
A = Space heater
B = Space heater & 12-inch floor stands
C = Space heater & 22-inch floor stands
• = Custom option ②

Communication Options

0 = No option
1 = PROFIBUS-DP
3 = CANopen (slave)
4 = DeviceNet
5 = PROFIBUS-DP (D9 connector)
D = SmartWire-DT
• = Custom option ②

Option Boards 1

0 = No option
1 = 3 x DI, 3 x DO, 1 Thermistor, 24 Vdc/EXT
2 = 1 x AI, 2 x AO (isolated to control board)
3 = 3 x relay dry contact (2NO + 1NO/NC)
4 = 3 x PT100 RTD thermistor input
5 = 6 DI 240 Vac input
• = Custom option ②

Option Boards 2

Same options and codes as Option Boards 1

Notes

① HMCP disconnect option required and only available when bypass is selected.
② More options are available as Engineered to Order through the Bid Manager tool.
③ All bypass options include third contactor for drive isolation when in bypass mode.
④ Output contactor not available with bypass. Bypass comes standard with output contactor.
⑤ Pilot devices are 22 mm standard. 30 mm options are available as engineered to order through the Bid Manager tool.

Production Selection

DG1 Enclosed Drive

208 V Drives—Constant Torque (CT)/High Overload (I_H) Enclosed Drives

hp	Current (A)	Drive Frame Size	NEMA Type 1 Base Catalog Number ①	NEMA Type 12 Base Catalog Number ①	NEMA Type 3R Base Catalog Number ①
0.75	3.5	1	**EGS3D51D1**	**EGS3D51D2**	**EGS3D51D3**
1	4.6	1	**EGS4D61D1**	**EGS4D61D2**	**EGS4D61D3**
1.5	6.6	1	**EGS6D61D1**	**EGS6D61D2**	**EGS6D61D3**
2	7.5	1	**EGS7D51D1**	**EGS7D51D2**	**EGS7D51D3**
3	10.6	1	**EGS0101D1**	**EGS0101D2**	**EGS0101D3**
5	16.7	2	**EGS0161D1**	**EGS0161D2**	**EGS0161D3**
7.5	24.2	2	**EGS0241D1**	**EGS0241D2**	**EGS0241D3**
10	30.8	3	**EGS0301D1**	**EGS0301D2**	**EGS0301D3**
15	46.2	3	**EGS0461D1**	**EGS0461D2**	**EGS0461D3**
20	59.4	4	**EGS0591C1**	**EGS0591C2**	**EGS0591C3**
25	74.8	4	**EGS0741C1**	**EGS0741C2**	**EGS0741C3**
30	88	4	**EGS0881C1**	**EGS0881C2**	**EGS0881C3**
40	114	5	**EGS1141C1**	**EGS1141C2**	**EGS1141C3**
50	143	5	**EGS1431C1**	**EGS1431C2**	**EGS1431C3**
60	169	5	**EGS1691C1**	**EGS1691C2**	**EGS1691C3**
75 ②	211	6	**EGS2111C1** ②	**EGS2111C2** ②	**EGS2111C3** ②
100 ②③	261 ③	6	**EGS2611C1** ②	**EGS2611C2** ②	**EGS2611C3** ②

DG1 Enclosed Drive

208 V Drives—Variable Torque (VT)/Low Overload (I_L) Enclosed Drives

hp	Current (A)	Drive Frame Size	NEMA Type 1 Base Catalog Number ①	NEMA Type 12 Base Catalog Number ①	NEMA Type 3R Base Catalog Number ①
1	4.6	1	**EGS4D61B1**	**EGS4D61B2**	**EGS4D61B3**
1.5	6.6	1	**EGS6D61B1**	**EGS6D61B2**	**EGS6D61B3**
2	7.5	1	**EGS7D51B1**	**EGS7D51B2**	**EGS7D51B3**
3	10.6	1	**EGS0101B1**	**EGS0101B2**	**EGS0101B3**
5	16.7	2	**EGS0161B1**	**EGS0161B2**	**EGS0161B3**
7.5	24.2	2	**EGS0241B1**	**EGS0241B2**	**EGS0241B3**
10	30.8	2	**EGS0301B1**	**EGS0301B2**	**EGS0301B3**
15	46.2	3	**EGS0461B1**	**EGS0461B2**	**EGS0461B3**
20	59.4	3	**EGS0591B1**	**EGS0591B2**	**EGS0591B3**
25	74.8	4	**EGS0741A1**	**EGS0741A2**	**EGS0741A3**
30	88	4	**EGS0881A1**	**EGS0881A2**	**EGS0881A3**
40	114	4	**EGS1141A1**	**EGS1141A2**	**EGS1141A3**
50	143	5	**EGS1431A1**	**EGS1431A2**	**EGS1431A3**
60	169	5	**EGS1691A1**	**EGS1691A2**	**EGS1691A3**
75	211	5	**EGS2111A1**	**EGS2111A2**	**EGS2111A3**
100 ②	273	6	**EGS2731A1** ②	**EGS2731A2** ②	**EGS2731A3** ②

Notes

① Table is for base catalog number reference only. For complete catalog number selection, see **Page V6-T2-71**.
② Available in 2017.
③ These units are current rated. They do not meet NEC ampere rating at this horsepower.

DG1 Enclosed Drive

230 V Drives—Constant Torque (CT)/High Overload (I_H) Enclosed Drives

hp	Current (A)	Drive Frame Size	NEMA Type 1 Base Catalog Number ①	NEMA Type 12 Base Catalog Number ①	NEMA Type 3R Base Catalog Number ①
0.75	3.2	1	**EGS3D22D1**	**EGS3D22D2**	**EGS3D22D3**
1	4.2	1	**EGS4D22D1**	**EGS4D22D2**	**EGS4D22D3**
1.5	6	1	**EGS6D02D1**	**EGS6D02D2**	**EGS6D02D3**
2	6.8	1	**EGS6D82D1**	**EGS6D82D2**	**EGS6D82D3**
3	9.6	1	**EGS9D62D1**	**EGS9D62D2**	**EGS9D62D3**
5	15.2	2	**EGS0152D1**	**EGS0152D2**	**EGS0152D3**
7.5	22	2	**EGS0222D1**	**EGS0222D2**	**EGS0222D3**
10	28	3	**EGS0282D1**	**EGS0282D2**	**EGS0282D3**
15	42	3	**EGS0422D1**	**EGS0422D2**	**EGS0422D3**
20	54	4	**EGS0542C1**	**EGS0542C2**	**EGS0542C3**
25	68	4	**EGS0682C1**	**EGS0682C2**	**EGS0682C3**
30	80	4	**EGS0802C1**	**EGS0802C2**	**EGS0802C3**
40	104	5	**EGS1042C1**	**EGS1042C2**	**EGS1042C3**
50	130	5	**EGS1302C1**	**EGS1302C2**	**EGS1302C3**
60	154	5	**EGS1542C1**	**EGS1542C2**	**EGS1542C3**
75 ②	192	6	**EGS1922C1** ②	**EGS1922C2** ②	**EGS1922C3** ②
100 ②	248	6	**EGS2482C1** ②	**EGS2482C2** ②	**EGS2482C3** ②

DG1 Enclosed Drive

230 V Drives—Variable Torque (VT)/Low Overload (I_L) Enclosed Drives

hp	Current (A)	Drive Frame Size	NEMA Type 1 Base Catalog Number ①	NEMA Type 12 Base Catalog Number ①	NEMA Type 3R Base Catalog Number ①
1	4.2	1	**EGS4D22B1**	**EGS4D22B2**	**EGS4D22B3**
1.5	6	1	**EGS6D02B1**	**EGS6D02B2**	**EGS6D02B3**
2	6.8	1	**EGS6D82B1**	**EGS6D82B2**	**EGS6D82B3**
3	9.6	1	**EGS9D62B1**	**EGS9D62B2**	**EGS9D62B3**
5	15.2	2	**EGS0152B1**	**EGS0152B2**	**EGS0152B3**
7.5	22	2	**EGS0222B1**	**EGS0222B2**	**EGS0222B3**
10	28	2	**EGS0282B1**	**EGS0282B2**	**EGS0282B3**
15	42	3	**EGS0422B1**	**EGS0422B2**	**EGS0422B3**
20	54	3	**EGS0542B1**	**EGS0542B2**	**EGS0542B3**
25	68	4	**EGS0682A1**	**EGS0682A2**	**EGS0682A3**
30	80	4	**EGS0802A1**	**EGS0802A2**	**EGS0802A3**
40	104	4	**EGS1042A1**	**EGS1042A2**	**EGS1042A3**
50	130	5	**EGS1302A1**	**EGS1302A2**	**EGS1302A3**
60	154	5	**EGS1542A1**	**EGS1542A2**	**EGS1542A3**
75	192	5	**EGS1922A1**	**EGS1922A2**	**EGS1922A3**
100 ②	248	6	**EGS2482A1** ②	**EGS2482A2** ②	**EGS2482A3** ②
125 ②	312	6	**EGS3122A1** ②	**EGS3122A2** ②	**EGS3122A3** ②

Notes

① Table is for base catalog number reference only. For complete catalog number selection, see **Page V6-T2-71**.

② Available in 2017.

DG1 Enclosed Drive

480 V Drives—Constant Torque (CT)/High Overload (I_H) Enclosed Drives

hp	Current (A)	Drive Frame Size	NEMA Type 1 Base Catalog Number ①	NEMA Type 12 Base Catalog Number ①	NEMA Type 3R Base Catalog Number ①
1	2.1	1	EGS2D14D1	EGS2D14D2	EGS2D14D3
1.5	3	1	EGS3D04D1	EGS3D04D2	EGS3D04D3
2	3.4	1	EGS3D44D1	EGS3D44D2	EGS3D44D3
3	4.8	1	EGS4D84D1	EGS4D84D2	EGS4D84D3
5	7.6	1	EGS7D64D1	EGS7D64D2	EGS7D64D3
7.5	11	2	EGS0114D1	EGS0114D2	EGS0114D3
10	14	2	EGS0144D1	EGS0144D2	EGS0144D3
15	21	2	EGS0214D1	EGS0214D2	EGS0214D3
20	27	3	EGS0274D1	EGS0274D2	EGS0274D3
25	34	3	EGS0344D1	EGS0344D2	EGS0344D3
30	40	3	EGS0404D1	EGS0404D2	EGS0404D3
40	52	4	EGS0524C1	EGS0524C2	EGS0524C3
50	65	4	EGS0654C1	EGS0654C2	EGS0654C3
60	77	4	EGS0774C1	EGS0774C2	EGS0774C3
75	96	5	EGS0964C1	EGS0964C2	EGS0964C3
100	124	5	EGS1244C1	EGS1244C2	EGS1244C3
125	156	5	EGS1564C1	EGS1564C2	EGS1564C3
150 ②	180	6	EGS1804C1 ②	EGS1804C2 ②	EGS1804C3 ②
200 ②	240	6	EGS2404C1 ②	EGS2404C2 ②	EGS2404C3 ②

DG1 Enclosed Drive

480 V Drives—Variable Torque (VT)/Low Overload (I_L) Enclosed Drives

hp	Current (A)	Drive Frame Size	NEMA Type 1 Base Catalog Number ①	NEMA Type 12 Base Catalog Number ①	NEMA Type 3R Base Catalog Number ①
1.5	3	1	EGS3D04B1	EGS3D04B2	EGS3D04B3
2	3.4	1	EGS3D44B1	EGS3D44B2	EGS3D44B3
3	4.8	1	EGS4D84B1	EGS4D84B2	EGS4D84B3
5	7.6	1	EGS7D64B1	EGS7D64B2	EGS7D64B3
7.5	11	1	EGS0114B1	EGS0114B2	EGS0114B3
10	14	2	EGS0144B1	EGS0144B2	EGS0144B3
15	21	2	EGS0214B1	EGS0214B2	EGS0214B3
20	27	2	EGS0274B1	EGS0274B2	EGS0274B3
25	34	3	EGS0344B1	EGS0344B2	EGS0344B3
30	40	3	EGS0404B1	EGS0404B2	EGS0404B3
40	52	3	EGS0524B1	EGS0524B2	EGS0524B3
50	65	4	EGS0654A1	EGS0654A2	EGS0654A3
60	77	4	EGS0774A1	EGS0774A2	EGS0774A3
75	96	4	EGS0964A1	EGS0964A2	EGS0964A3
100	124	5	EGS1244A1	EGS1244A2	EGS1244A3
125	156	5	EGS1564A1	EGS1564A2	EGS1564A3
150	180	5	EGS1804A1	EGS1804A2	EGS1804A3
200 ②	240	6	EGS2404A1 ②	EGS2404A2 ②	EGS2404A3 ②
250 ②	302	6	EGS3024A1 ②	EGS3024A2 ②	EGS3024A3 ②

Notes

① Table is for base catalog number reference only. For complete catalog number selection, see **Page V6-T2-71**.
② Available in 2017.

DG1 Enclosed Drive

230 V Single-Phase Drives—Variable Torque (VT)/Low Overload (I_L) Enclosed Drives

hp	Current (A)	Drive Frame Size	NEMA Type 1 Base Catalog Number ①	NEMA Type 12 Base Catalog Number ①	NEMA Type 3R Base Catalog Number ①
Low Overload (VT) Enclosed Drives					
0.75	3.2	1	**EGS3D2JB1**	**EGS3D2JB2**	**EGS3D2JB3**
1	4.2	1	**EGS4D2JB1**	**EGS4D2JB2**	**EGS4D2JB3**
1.5	6	2	**EGS6D0JB1**	**EGS6D0JB2**	**EGS6D0JB3**
2	6.8	2	**EGS6D8JB1**	**EGS6D8JB2**	**EGS6D8JB3**
3	9.6	2	**EGS9D6JB1**	**EGS9D6JB2**	**EGS9D6JB3**
5	15.2	2	**EGS015JB1**	**EGS015JB2**	**EGS015JB3**
7.5	22	3	**EGS022JB1**	**EGS022JB2**	**EGS022JB3**
10	28	3	**EGS028JB1**	**EGS028JB2**	**EGS028JB3**
15	42	4	**EGS042JB1**	**EGS042JB2**	**EGS042JB3**
20	54	4	**EGS054JB1**	**EGS054JB2**	**EGS054JB3**
25	68	5	**EGS068JA1**	**EGS068JA2**	**EGS068JA3**
30	80	5	**EGS080JA1**	**EGS080JA2**	**EGS080JA3**
40	104	5	**EGS104JA1**	**EGS104JA2**	**EGS104JA3**

DG1 Enclosed Drive

480 V Single-Phase Drives—Variable Torque (VT)/Low Overload (I_L) Enclosed Drives

hp	Current (A)	Drive Frame Size	NEMA Type 1 Base Catalog Number ①	NEMA Type 12 Base Catalog Number ①	NEMA Type 3R Base Catalog Number ①
Low Overload (VT) Enclosed Drives					
1	2.1	1	**EGS2D1KB1**	**EGS2D1KB2**	**EGS2D1KB3**
1.5	3	1	**EGS3D0KB1**	**EGS3D0KB2**	**EGS3D0KB3**
2	3.4	1	**EGS3D4KB1**	**EGS3D4KB2**	**EGS3D4KB3**
3	4.8	1	**EGS4D8KB1**	**EGS4D8KB2**	**EGS4D8KB3**
5	7.6	2	**EGS7D6KB1**	**EGS7D6KB2**	**EGS7D6KB3**
7.5	11	2	**EGS011KB1**	**EGS011KB2**	**EGS011KB3**
10	14	2	**EGS014KB1**	**EGS014KB2**	**EGS014KB3**
15	21	3	**EGS021KB1**	**EGS021KB2**	**EGS021KB3**
20	27	4	**EGS027KB1**	**EGS027KB2**	**EGS027KB3**
25	34	4	**EGS034KB1**	**EGS034KB2**	**EGS034KB3**
30	40	4	**EGS040KB1**	**EGS040KB2**	**EGS040KB3**
40	52	5	**EGS052KB1**	**EGS052KB2**	**EGS052KB3**
50	65	5	**EGS065KA1**	**EGS065KA2**	**EGS065KA3**
60	77	5	**EGS077KA1**	**EGS077KA2**	**EGS077KA3**

Note

① Table is for base catalog number reference only. For complete catalog number selection, see **Page V6-T2-71**.

Enclosure Selection

EGS

Enclosure selection charts are based on physical space limitations only and only to be used as a reference. For actual enclosure sizing, refer to Bid Manager.

Note: Standard enclosure sizing includes dedicated space for a circuit breaker or fusible disconnect, CPT, SPD, heater/thermostat, control relay and terminal blocks.

Standard Enclosure X-Space

Enclosure Size	Frame 1	Frame 2	Frame 3	Frame 4	Frame 5
AX	2	2	2	—	—
BX	4	4	4	4	—
CX	7	7	7	7	7
DX	18	18	18	18	18

Standard Power Options X-Space

Power Options	Frame 1	Frame 2	Frame 3	Frame 4	Frame 5
Isolation fuses	1	1	1	1	1
3% Input reactor	2	2	3	5	6
3% Output reactor	1	1	3	5	6
dV/dt filter	3	3	3	5	6
Output contactor	1	1	1	1	1

Note: Bypass enclosure sizing includes dedicated space for a MCP, CPT, input contactor, output bypass contactors, overload relay, SPD, heater/thermostat, control relay and terminal blocks.

Bypass Enclosure X-Space

Enclosure Size	Frame 1	Frame 2	Frame 3	Frame 4	Frame 5
AX	0	0	0	—	—
BX	2	2	2	0	—
CX	5	5	5	3	2
DX	16	16	16	14	13

Bypass Power Options X-Space

Power Options	Frame 1	Frame 2	Frame 3	Frame 4	Frame 5
Isolation fuses	1	1	1	1	1
3% Input reactor	2	2	3	5	6
RVSS bypass	2	2	2	3	4
3% output reactor	1	1	3	5	6
dV/dt filter	3	3	3	5	6

Note: Single-phase enclosure sizing includes dedicated space for a capacitor kit, circuit breaker or fusible disconnect, CPT, SPD, heater/thermostat, control relay and terminal blocks.

Single-Phase Enclosure X-Space

Enclosure Size	Frame 1	Frame 2	Frame 3	Frame 4	Frame 5
AX	0	0	—	—	—
BX	2	2	1	1	—
CX	5	5	4	4	4
DX	16	16	15	15	15

Single-Phase Power Options X-Space

Power Options	Frame 1	Frame 2	Frame 3	Frame 4	Frame 5
Isolation fuses	1	1	1	1	1
3% Input reactor	2	2	3	5	6
3% Output reactor	1	1	3	5	6
dV/dt filter	3	3	3	5	6
Output contactor	1	1	1	1	1

Accessories

The PowerXL Series—DG1 drives can accommodate a wide selection of expander and adapter option boards to customize the drive for your application needs. The drive's control unit is designed to accept a total of two additional option boards.

The PowerXL Series—DG1 drives come with a factory-installed standard board configuration including the following:

- Standard I/O:
  - 8DI, 1DO
  - 2AI, 2AO
  - 2FC, 1FA relays
- Standard communications:
  - EtherNet/IP, Modbus TCP
  - RS-485: Modbus RTU, BACnet MS/TP

PowerXL Series—DG1 I/O Card Kits

Description	Catalog Number
3 x DI, 3 x DO, 1 x thermistor, 24 Vdc/EXT option card	**DXG-EXT-3DI3DO1T**
1 x AI, 2 x AO (isolated to control board) option card	**DXG-EXT-1AI2AO**
3 x relay dry contact (2NO + 1NO/NC) option card	**DXG-EXT-3RO**
3 x PT100 RTD thermistor input option card	**DXG-EXT-THER1**
6 x DI 240 Vac input option card	**DXG-EXT-6DI**

PowerXL Series—DG1 Communication Card Kits

Description	Catalog Number
PROFIBUS-DP communication card	**DXG-NET-PROFB**
CANopen communication card	**DXG-NET-CANOPEN**
DeviceNet communication card	**DXG-NET-DEVICENET**
PROFIBUS DB9 to 5-pin adapter card	**DXG-NET-PROAD**
SmartWire communication card and module	**DXG-NET-SWD** ①

Note

① Available in January 2017.

Options

Input Power Options

Option	Description
HMCP Disconnect	The HMCP motor protection circuit breaker uses an electronic trip unit to provide typical motor overload relay functionality and short-circuit protection against potential phase-to-phase or phase-to-ground faults.
Circuit Breaker	Utilizes a circuit breaker to provide a means of short-circuit protection for the power cables between it and the drive, and protection from high-level ground faults on the power cable. Allows a convenient means of disconnecting the drive from the line, and the operating mechanism can be padlocked in the OFF position. This is factory mounted in the enclosure.
Isolation Fusing	Provides high-level fault protection of the drive input power circuit from the load side of the fuses to the input side of the power transistors. This option consists of three 200 kA fuses that are factory mounted in the enclosure.
3% Input Reactor	The input reactor is a three-phase series inductance on the line side of an AFD. It is used to provide a reduction in voltage and current harmonics. It also provides increased input protection for AFD and its semiconductors from line transients.
SPD	Provides a UL 1449 surge protection device (SPD) rated for 40 kA/ph that is connected to the line side terminals.
Fused Disconnect	Utilizes fusing to provide a means of short-circuit protection for the power cables between it and the drive, and protection from high-level ground faults on the power cable. Allows a convenient means of disconnecting the drive from the line, and the operating mechanism can be padlocked in the OFF position. This is factory mounted in the enclosure.

Bypass Options

Option	Description
Manual HOA Bypass	Provides a three-position selector switch that allows the user to select either a HAND or AUTO mode of operation. HAND mode is defaulted keypad operation, and AUTO mode is defaulted to control from an external terminal source. These modes of operation can be configured via programming to allow for alternate combinations of start and speed sources. Start and speed sources include keypad, I/O and fieldbus.
Manual HOA RVSS Bypass	This option adds a reduced voltage soft starter to bypass assembly for soft starting in bypass mode.

Output Power Options

Option	Description
Output Contactor	Provides a means for positive disconnection of the drive output from the motor terminals. The contactor coil is controlled by the drive's run or permissive logic. NC and NO auxiliary contacts rated at 10 A, 600 Vac are provided for customer use. This option includes a low VA 115 Vac fused control power transformer and is factory mounted in the enclosure.
3% Output Reactor	The output reactor is a three-phase series inductance on the load side of a VFD. It is used to reduce transient voltage (dv/dt) and peak voltages at the motor terminals. A 3% output filter is recommended for motor cable lengths up to 300 ft (10 m).
dV/dt Filter	Used to reduce the transient voltage (dV/dt) at the motor terminals. Recommended for motor cable lengths over 300 ft (10 m) and up to 1000 ft (304.8 m). This option is mounted in the enclosure.

Control Options

Option	Description
Speed Pot	Provides the ability to adjust the frequency reference using a door-mounted potentiometer. This option uses the 10 Vdc reference to generate a 0–10 V signal at the analog voltage input signal terminal. When the HOA bypass option is added, the speed is controlled when the HOA switch is in the HAND position. Without the HOA bypass option, a two-position switch (labeled local/remote) is provided on the keypad to select speed reference from the speed potentiometer or a remote speed signal.
HOA Switch	Provides a three-position selector switch that allows the user to select either a HAND or AUTO mode of operation. HAND mode is defaulted to keypad operation, and AUTO mode is defaulted to control from an external terminal source. These modes of operation can be configured via drive programming to allow for alternate combinations of start and speed sources. Start and speed sources include Keypad, I/O and fieldbus.
Start-Stop Pushbutton	Provides door-mounted START and STOP pushbuttons for either bypass or non-bypass configurations.

Light Options

Option	Description
Non-Bypass Light Kit—Power On, Run, Fault	Provides a white POWER ON light that indicates power to the enclosed cabinet, a green RUN light that indicates the drive is running and a red FAULT light that indicates a drive fault has occurred.
Bypass Light Kit—On, VFD Run, Fault, Bypass Run	Provides a white POWER ON light that indicates power to the enclosed cabinet, a green RUN light that indicates the drive is running, a red FAULT light that indicates a drive fault has occurred and an amber light that indicates when the motor is running in Bypass mode.

Enclosure Options

Option	Description
Floor Stand 12 in	Converts a normally wall-mounted enclosure to a floor-standing enclosure with a height of 12 in (304.8 mm).
Floor Stand 22 in	Converts a normally wall-mounted enclosure to a floor-standing enclosure with a height of 22 in (558.8 mm).

Technical Data and Specifications

PowerXL Series—DG1 Technical Data and Specifications

Attribute	Description	Specification
Input ratings	Input voltage U_{in}	208 V, 230 V, 480 V, 575 V, –15 to 10%
	Input frequency	50 Hz to 60 Hz (variation up to 45 Hz to 66 Hz)
	Connection to power	Once per minute or less
	Starting delay	3 s (FR1 to FR2), 4 s (FR3), 5 s (FR4), 6 s (FR5 and FR6)
	Short-circuit withstand rating	100 kAIC (fuses and circuit breakers)
Output ratings	Output voltage	0 to U_{in}
	Output current	I_L: ambient temperature maximum 40 °C, up to 60 °C with derating, overload 1.1 x I_L (1 min./10 min.) I_H: ambient temperature maximum 50 °C, up to 60 °C with derating, overload 1.5 x I_H (1 min./10 min.)
	Initial output current	200% (2 s / 20 s)
	Output frequency	0–400 Hz (standard)
	Frequency resolution	0.01 Hz
Control characteristics	Control methods	Frequency control Speed control Open-loop speed control Open-loop torque control
	Switching frequency	230 V / 480 V range: FR1–3: 1 kHz to 12 kHz FR4–6: 1 kHz to 10 kHz 230 V / 480 V defaults: FR1–3: 4 kHz FR4–5: 3.6 kHz FR6: 2 kHz 575 V range: FR1–6: 1 kHz to 6 kHz 575 V defaults: FR1–4: 3 kHz FR5–6: 2 kHz Automatic switching frequency derating in case of overload.
	Frequency reference	Analog input: resolution 0.1% (10-bit), accuracy +1% Analog output: resolution 0.1% (10-bit), accuracy +1% Panel reference: resolution 0.01 Hz
	Field weakening point	20 Hz to 400 Hz
	Acceleration time	0.1 s to 3000 s
	Deceleration time	0.1 s to 3000 s
	Braking torque	DC brake: 30% x Motor Rated Torque (Tn) (without brake chopper) Dynamic braking (with optional brake chopper using an external brake resistor): 100% continuous maximum rating
Ambient conditions	Ambient operating temperature	–10 °C (no frost) to +40 °C
	Storage temperature	–40 °C to +70 °C
	Relative humidity	0–95% RH, noncondensing, non-corrosive
	Air quality: • Chemical vapors • Mechanical particles	Tested according to IEC 60068-2-60 Test Key: Flowing mixed gas corrosion test, Method 1 (H2S [hydrogen sulfide] and SO2 [sulfur dioxide]) Designed according to: IEC 60721-3-3, unit in operation, class 3C2 IEC 60721-3-3, unit in operation, class 3S2
	Altitude	100% load capacity (no derating) up to 3280 ft (1000 m); 1% derating for each 328 ft (100 m) above 3280 ft (1000 m); max. 9842 ft (3000 m) (2000 m for corner grounded earth main systems) For 575 V product, maximum altitude is 6561 ft (2000 m) regardless of main system

PowerXL Series—DG1 Technical Data and Specifications, continued

Attribute	Description	Specification
Ambient conditions, continued	Overvoltage	Overvoltage Category III
	Pollution degree	Pollution Degree 2
	Enclosure class	NEMA Type 1, 12, 3R
	Immunity	Fulfills EN 61800-3 (2004), first and second environment
Standards	Safety	UL 508C, EN 61800-5-1
	Approvals	UL and cUL
Fieldbus connections		Onboard: EtherNet/IP, Modbus® TCP, Modbus RTU, BACnet
Safety/protections	Overvoltage protection	Yes
	Overvoltage trip limit	230 V drives: 456 V 480 V drives: 911 V 575 V drives: 1100 V
	Undervoltage protection	Yes
	Undervoltage trip limit	230 V drives: 211 V 480 V drives: 370 V 575 V drives: 550 V
	Earth fault protection	Yes Default: 15% motor FLA Minimum: 0% motor FLA Maximum: 30% motor FLA
	Input phase supervision	Yes
	Motor phase supervision	Yes
	Overcurrent protection	Yes
	Unit overtemperature protection	Yes
	Motor overload protection	Yes
	Motor stall protection	Yes
	Motor underload protection	Yes
	DC bus overvoltage control	Yes
	Short-circuit protection of 24 V reference voltages	Yes
	Surge protection	Yes (differential mode 2 kV; common mode 4 kV 230 V drives: 275 Vac, 10,000 A 480 V drives: 320 Vac, 8000 A 575 V drives: 385 Vac, 10,000 A
	Common coated boards	Yes (prevents corrosion)
Efficiency	Drive efficiency ratings ①	480 V: FR1 = 97.7% FR2 = 97.9% FR3 = 97.7% FR4 = 98.0% FR5 = 98.2% 230 V: FR1 = 96.7% FR2 = 97.4% FR3 = 97.2% FR4 = 97.4% FR5 = 97.7%

Note

① Based on DG1 efficiency ratings in an enclosure with no options.

Wiring Diagram

PowerXL Series—DG1 Control Wiring Diagram

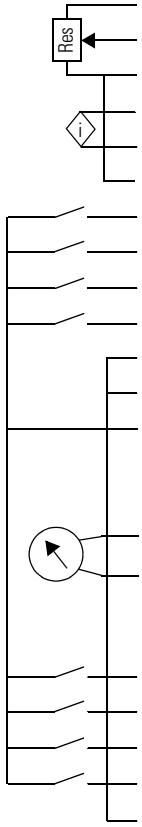

Pin	Signal Name	Signal	Default Setting	Description
1	+10 V	Ref. Output Voltage	—	10 Vdc Supply Source
2	AI1+	Analog Input 1	0–10 V	Voltage Speed Reference (Programmable to 4 mA to 20 mA)
3	AI1–	Analog Input 1 Ground	—	Analog Input 1 Common (Ground)
4	AI2+	Analog Input 2	4 mA to 20 mA	Current Speed Reference (Programmable to 0–10 V)
5	AI2–	Analog Input 2 Ground	—	Analog Input 2 Common (Ground)
6	GND	I/O Signal Ground	—	I/O Ground for Reference and Control
7	DIN5	Digital Input 5	Preset Speed B0	Sets frequency output to Preset Speed 1
8	DIN6	Digital Input 6	Preset Speed B1	Sets frequency output to Preset Speed 2
9	DIN7	Digital Input 7	Emergency Stop (TI–)	Input forces VFD output to shut off
10	DIN8	Digital Input 8	Force Remote (TI+)	Input takes VFD from Local to Remote
11	CMB	DI5 to DI8 Common	Grounded	Allows source input
12	GND	I/O Signal Ground	—	I/O Ground for Reference and Control
13	24 V	+24 Vdc Output	—	Control voltage output (100 mA max.)
14	DO1	Digital Output 1	Ready	Shows the drive is ready to run
15	24 Vo	+24 Vdc Output	—	Control voltage output (100 mA max.)
16	GND	I/O Signal Ground	—	I/O Ground for Reference and Control
17	AO1+	Analog Output 1	Output Frequency	Shows Output frequency to motor 0–60 Hz (4 mA to 20 mA)
18	AO2+	Analog Output 2	Motor Current	Shows Motor current of motor 0–FLA (4 mA to 20 mA)
19	24 Vi	+24 Vdc Input	—	External control voltage input
20	DIN1	Digital Input 1	Run Forward	Input starts drive in forward direction (start enable)
21	DIN2	Digital Input 2	Run Reverse	Input starts drive in reverse direction (start enable)
22	DIN3	Digital Input 3	External Fault	Input causes drive to fault
23	DIN4	Digital Input 4	Fault Reset	Input resets active faults
24	CMA	DI1 to DI4 Common	Grounded	Allows source input
25	A	RS-485 Signal A	—	Fieldbus Communication (Modbus, BACnet)
26	B	RS-485 Signal B	—	Fieldbus Communication (Modbus, BACnet)
27	R3NO	Relay 3 Normally Open	At Speed	Relay output 3 shows VFD is at Ref. Frequency
28	R1NC	Relay 1 Normally Closed	Run	Relay output 1 shows VFD is in a run state
29	R1CM	Relay 1 Common		
30	R1NO	Relay 1 Normally Open		
31	R3CM	Relay 3 Common	At Speed	Relay output 3 shows VFD is at Ref. Frequency
32	R2NC	Relay 2 Normally Closed	Fault	Relay output 2 shows VFD is in a fault state
33	R2CM	Relay 2 Common		
34	R2NO	Relay 2 Normally Open		

Dimensions

Approximate Dimensions in Inches (mm)

AX Box Type 1

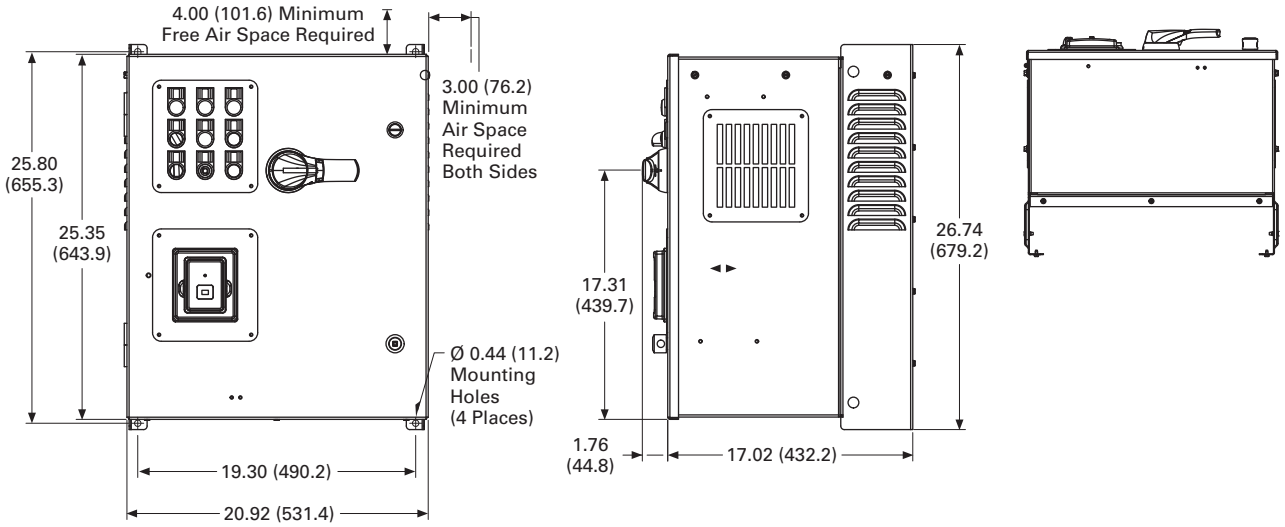

AX Box Type 1—12 Inch Floor Stands

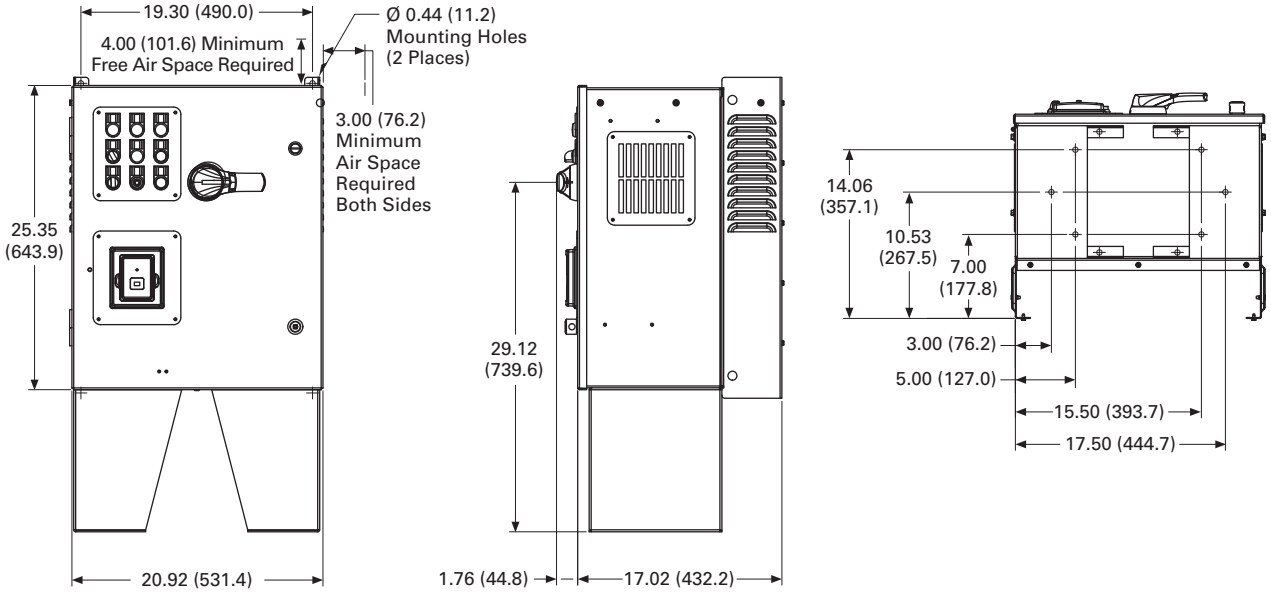

Approximate Dimensions in Inches (mm)

AX Box Type 1—22 Inch Floor Stands

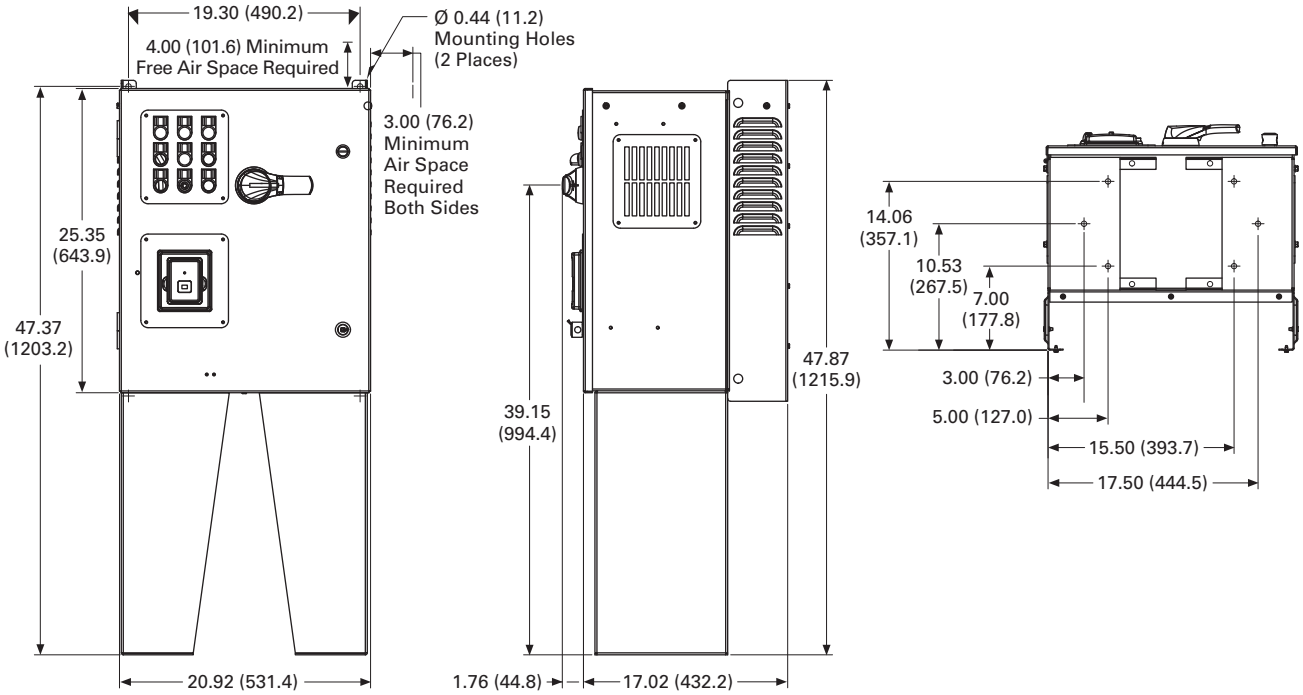

AX Box Type 12

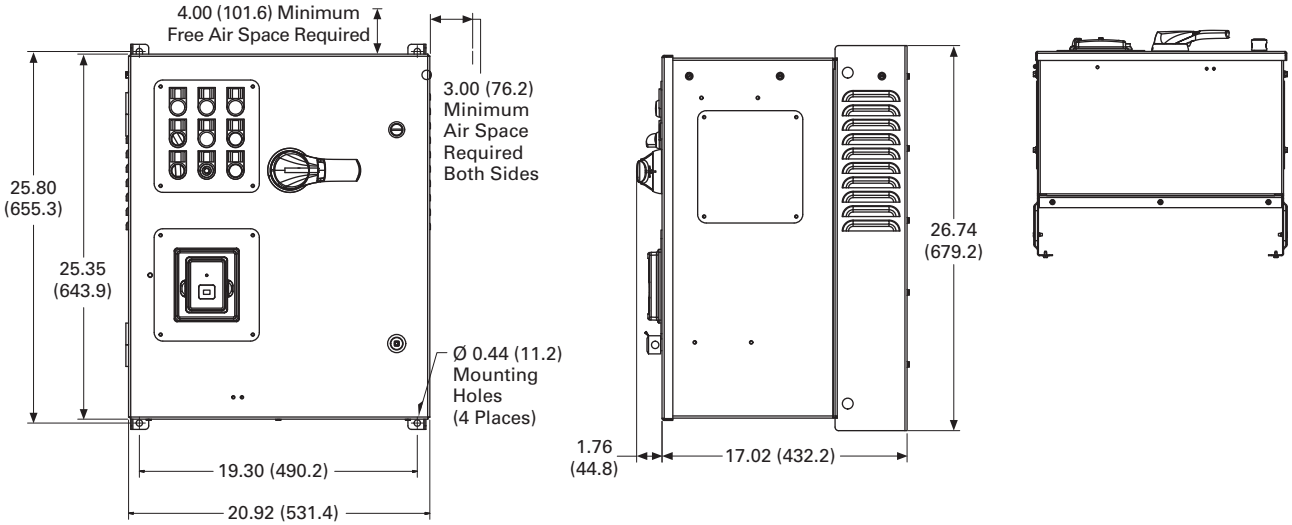

Approximate Dimensions in Inches (mm)

AX Box Type 12—12 Inch Floor Stands

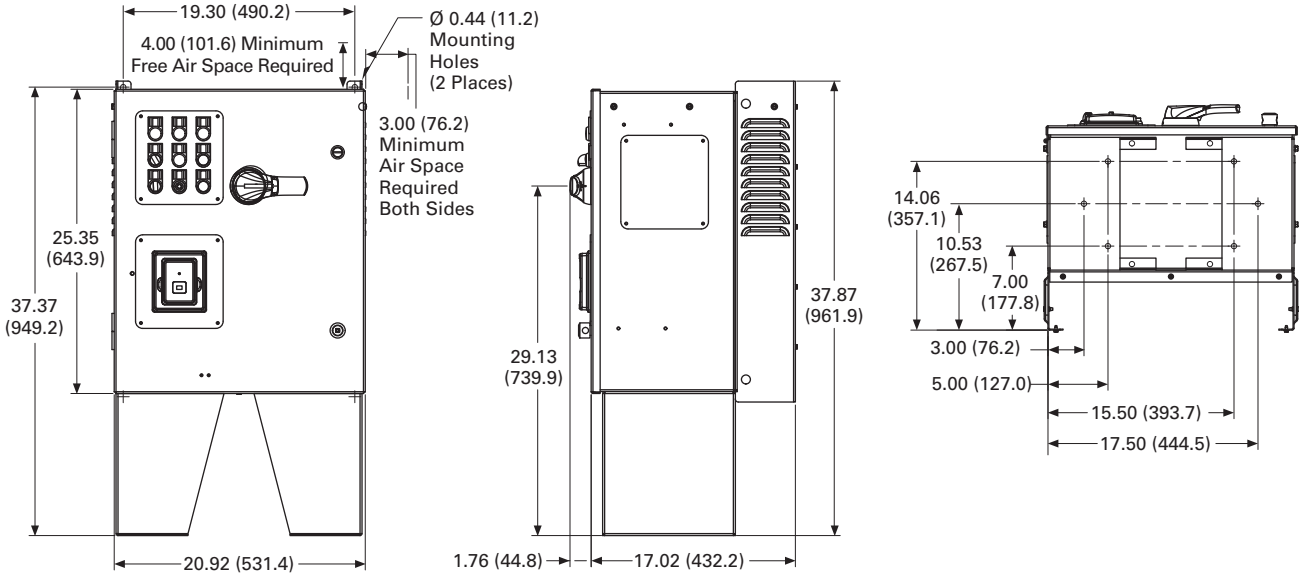

AX Box Type 12—22 Inch Floor Stands

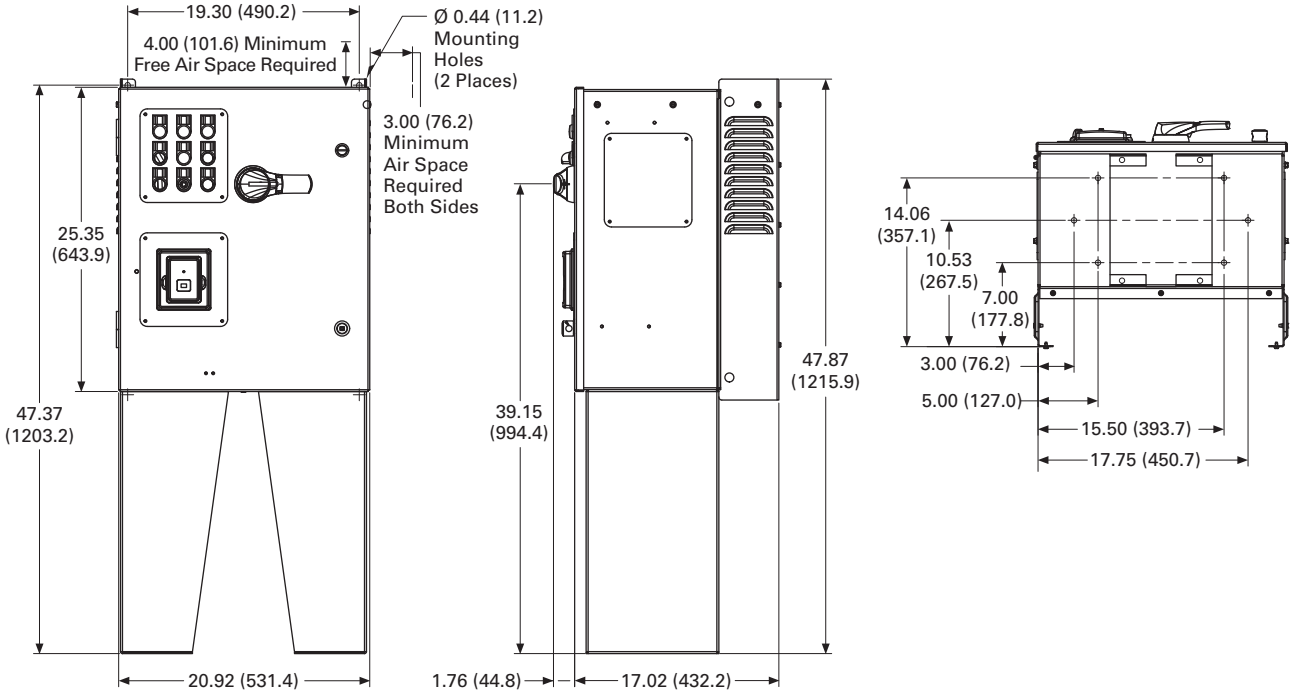

Approximate Dimensions in Inches (mm)

AX Box Type 3R

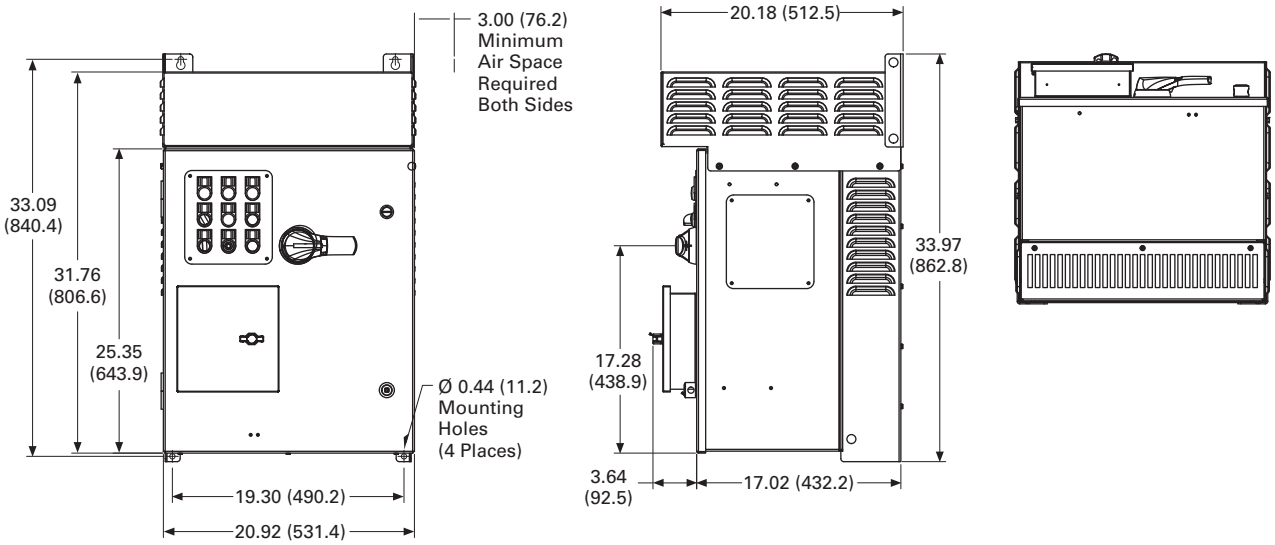

AX Box Type 3R—12 Inch Floor Stands

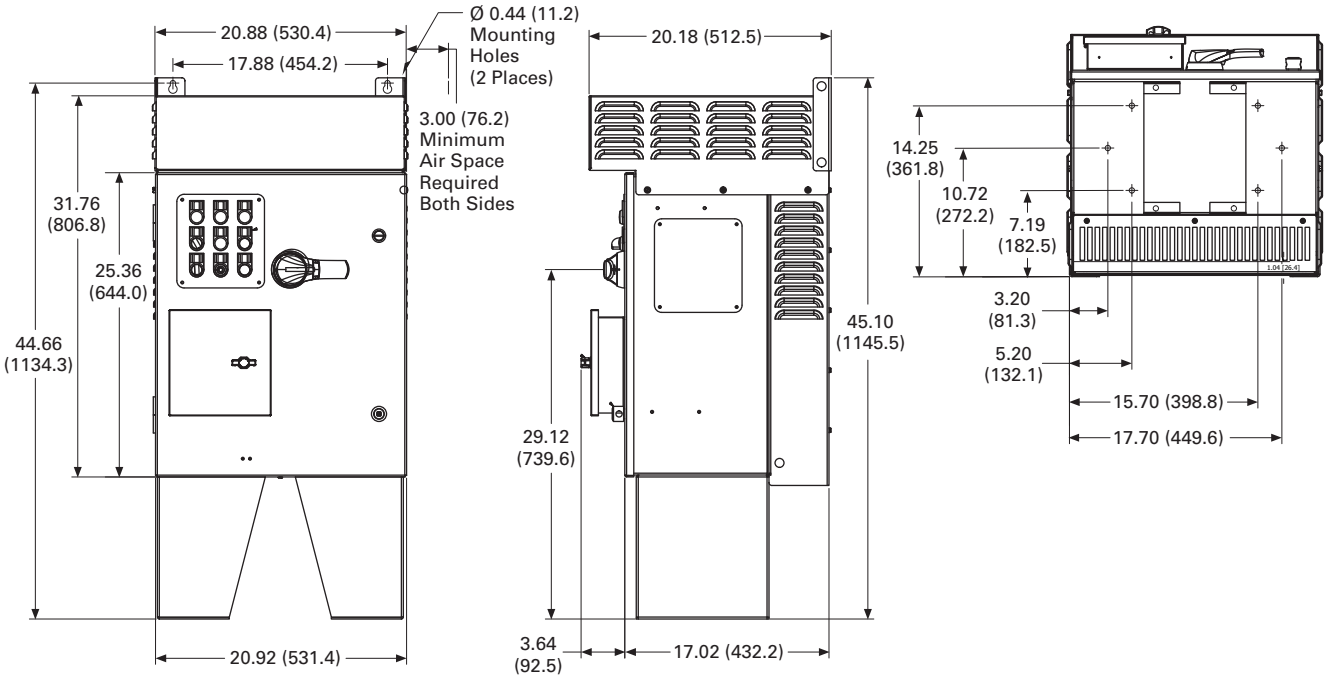

Approximate Dimensions in Inches (mm)

AX Box Type 3R—22 Inch Floor Stands

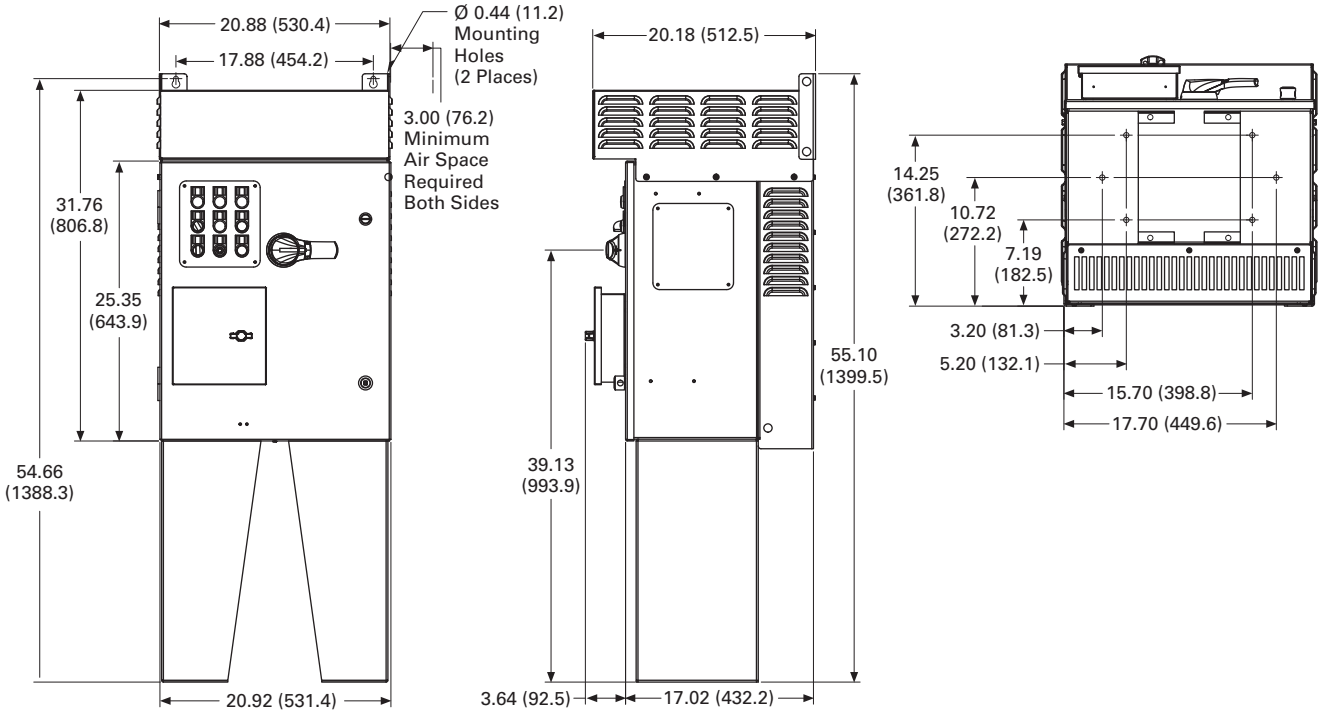

BX Box Type 1

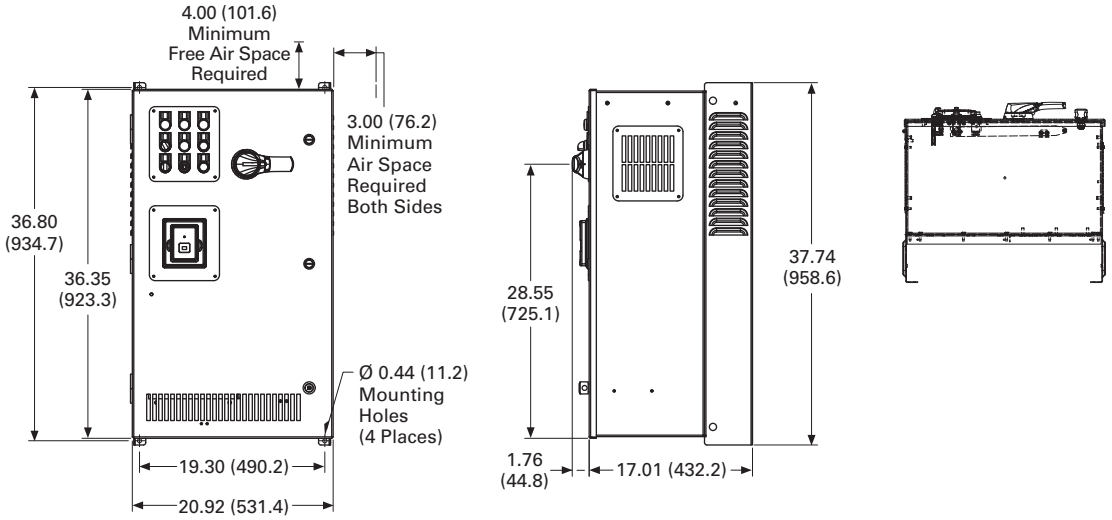

Approximate Dimensions in Inches (mm)

BX Box Type 1—12 Inch Floor Stands

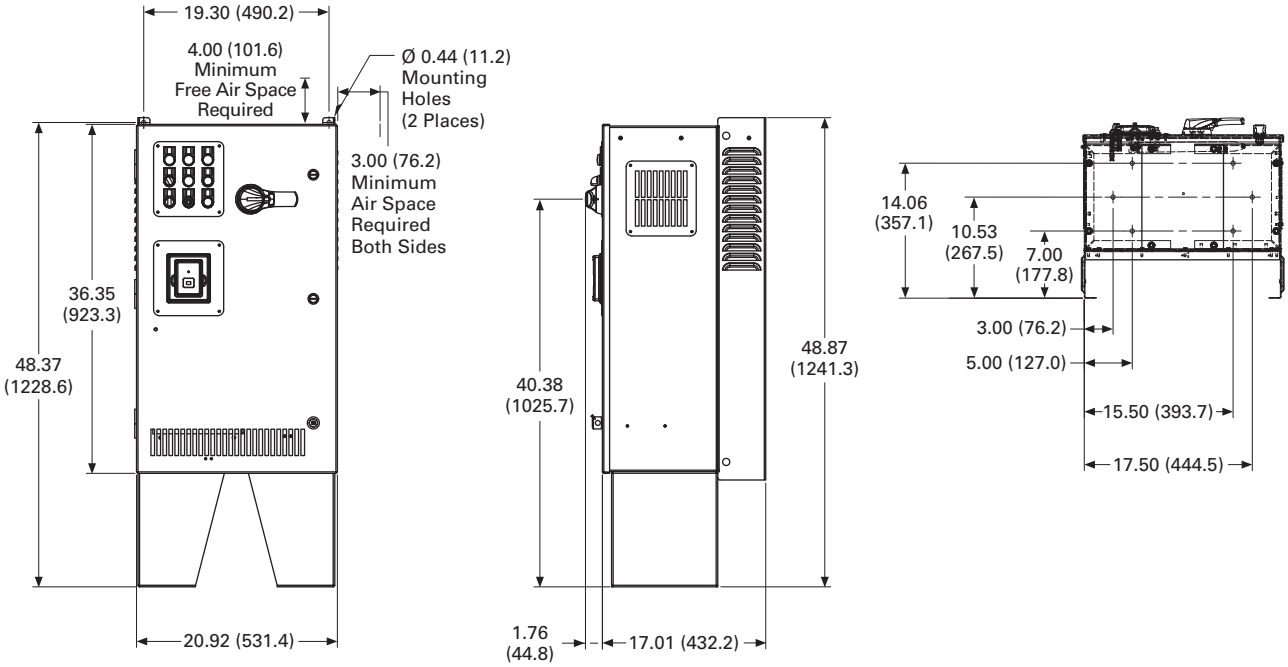

BX Box Type 1—22 Inch Floor Stands

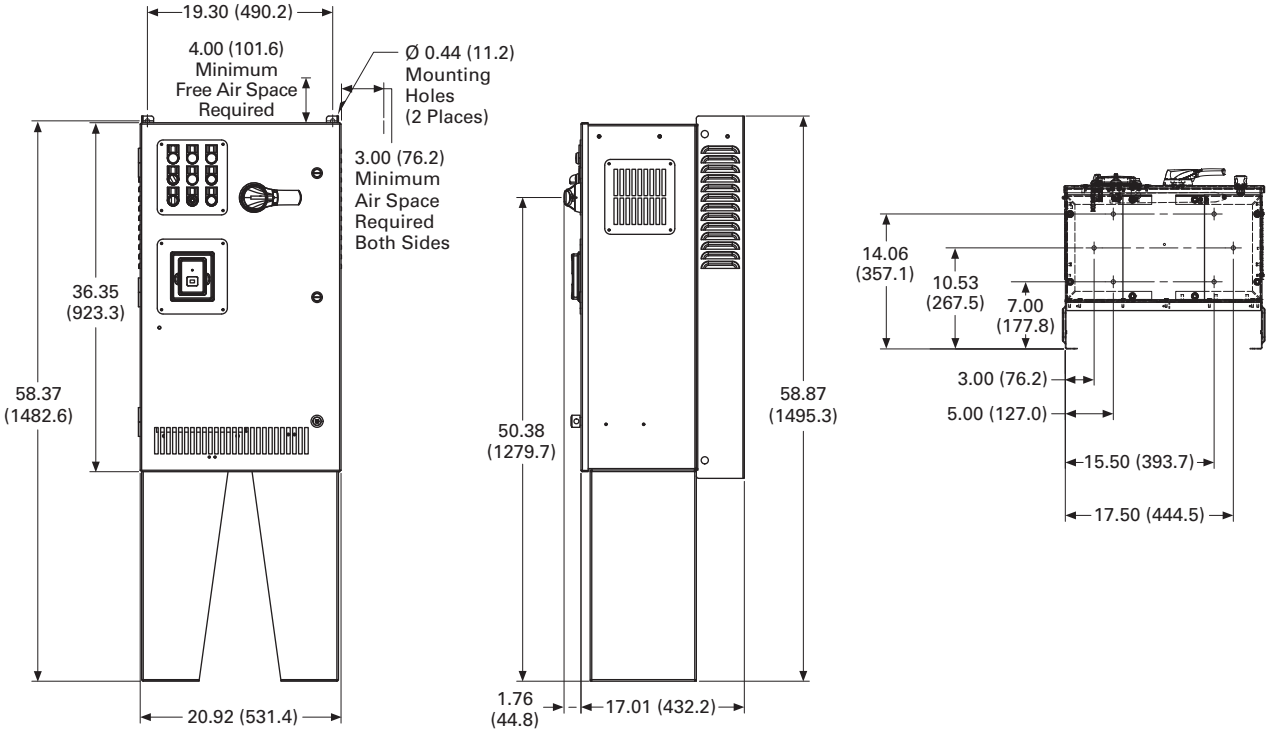

Approximate Dimensions in Inches (mm)

BX Box Type 12

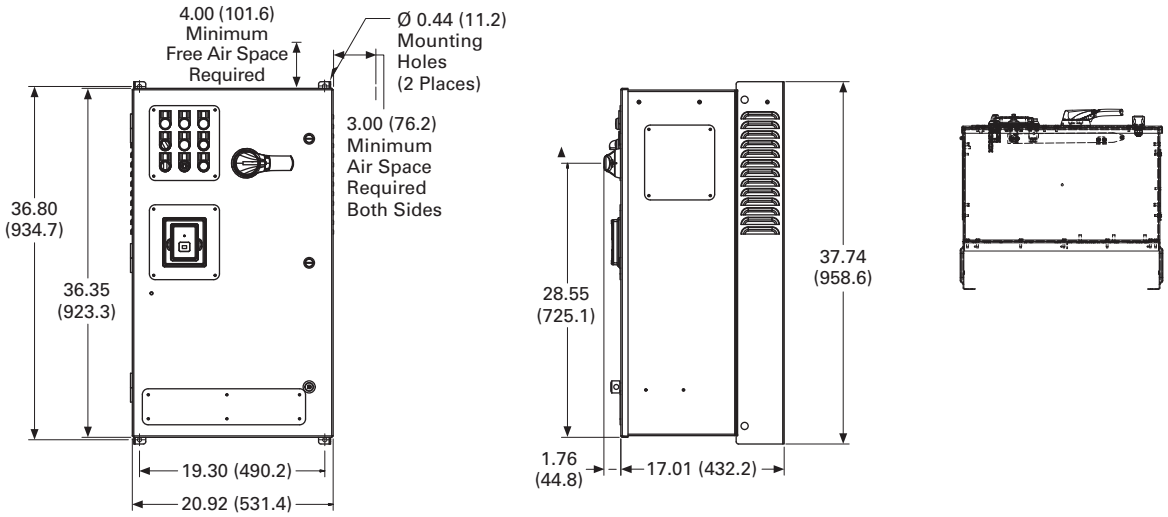

BX Box Type 12—12 Inch Floor Stands

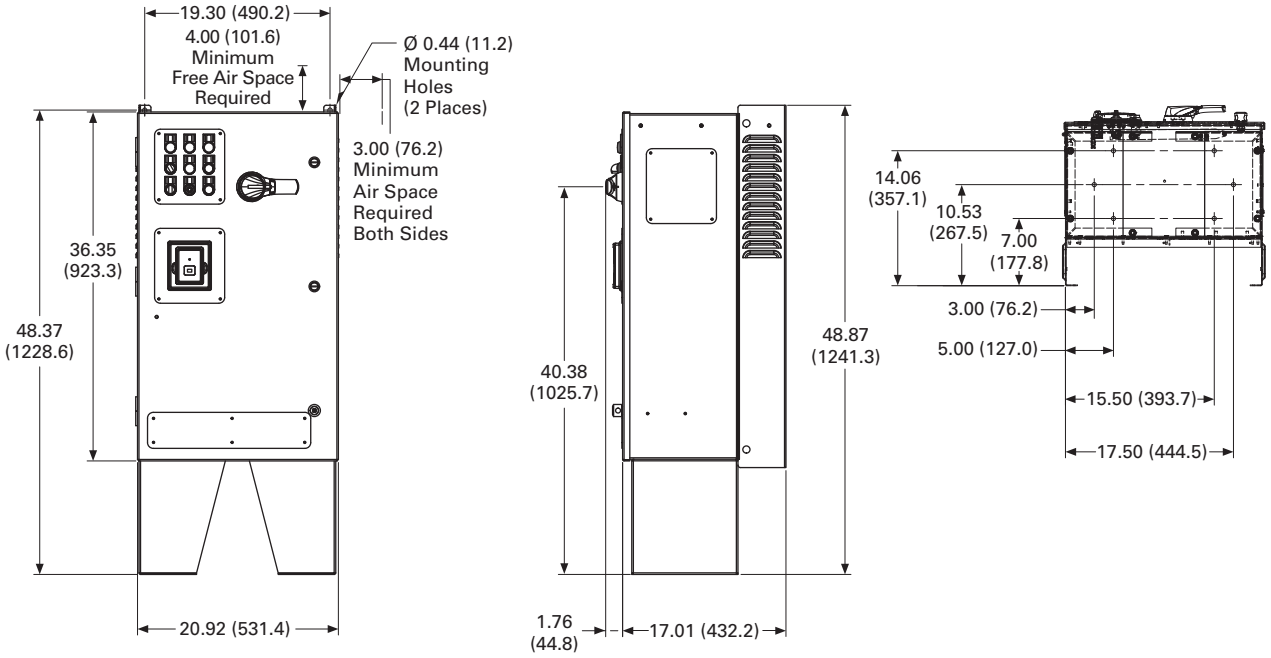

Approximate Dimensions in Inches (mm)

BX Box Type 12—22 Inch Floor Stands

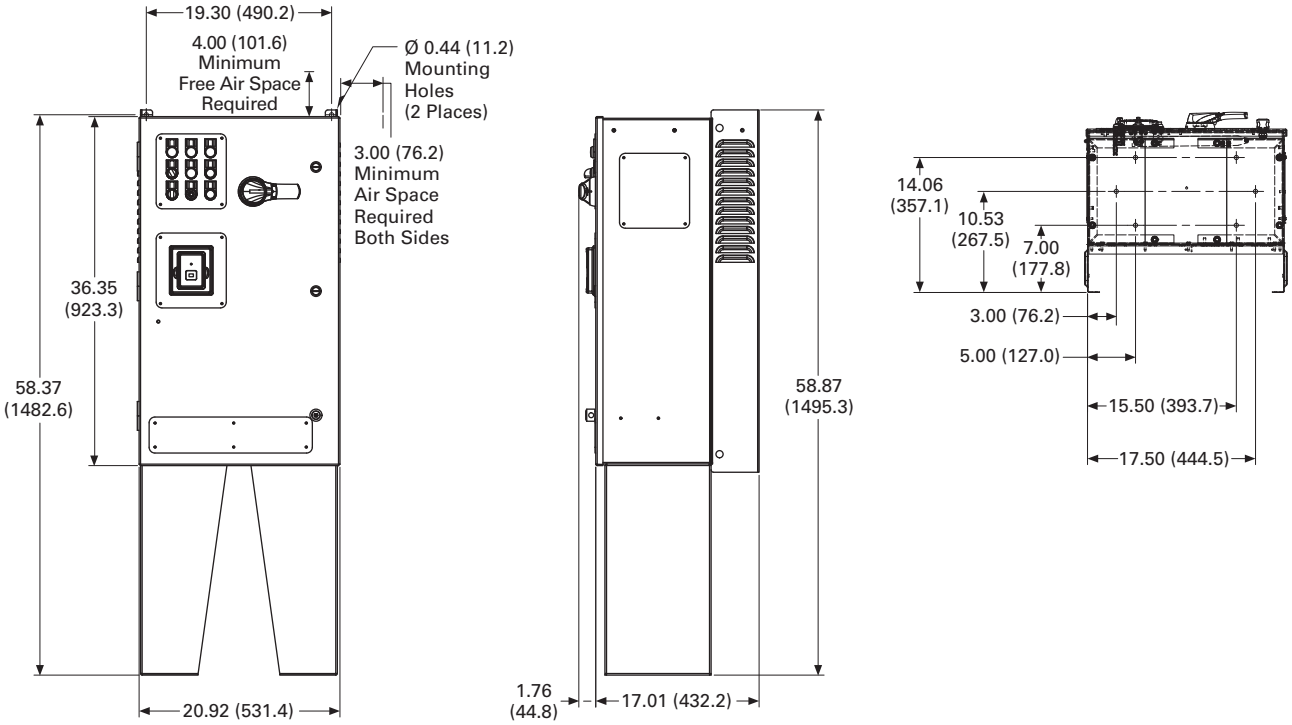

BX Box Type 3R

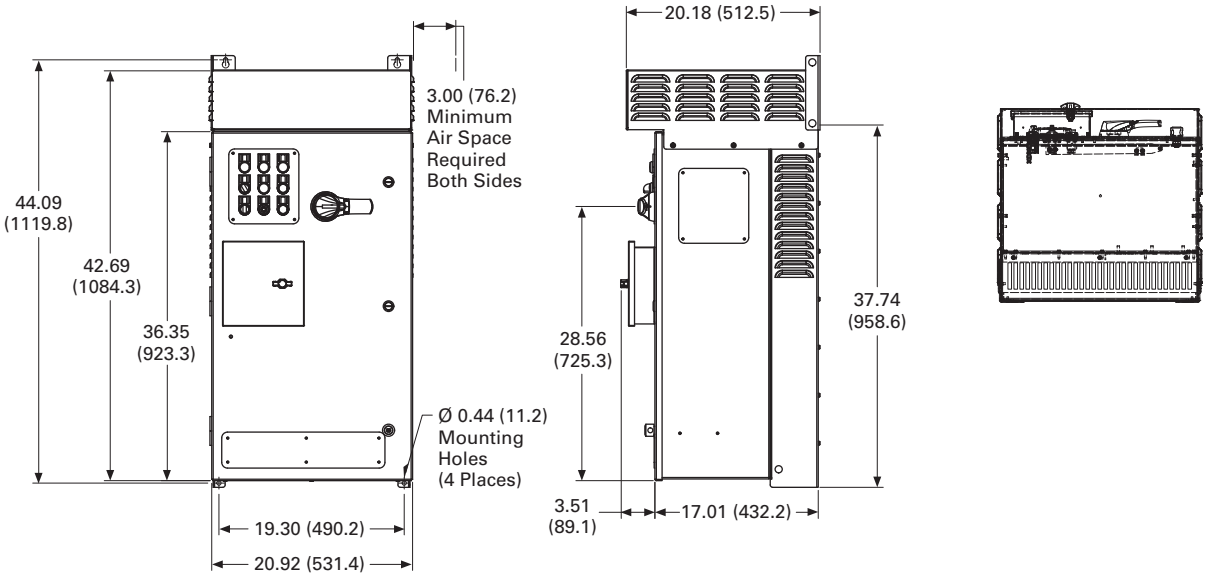

Approximate Dimensions in Inches (mm)

BX Box Type 3R—12 Inch Floor Stands

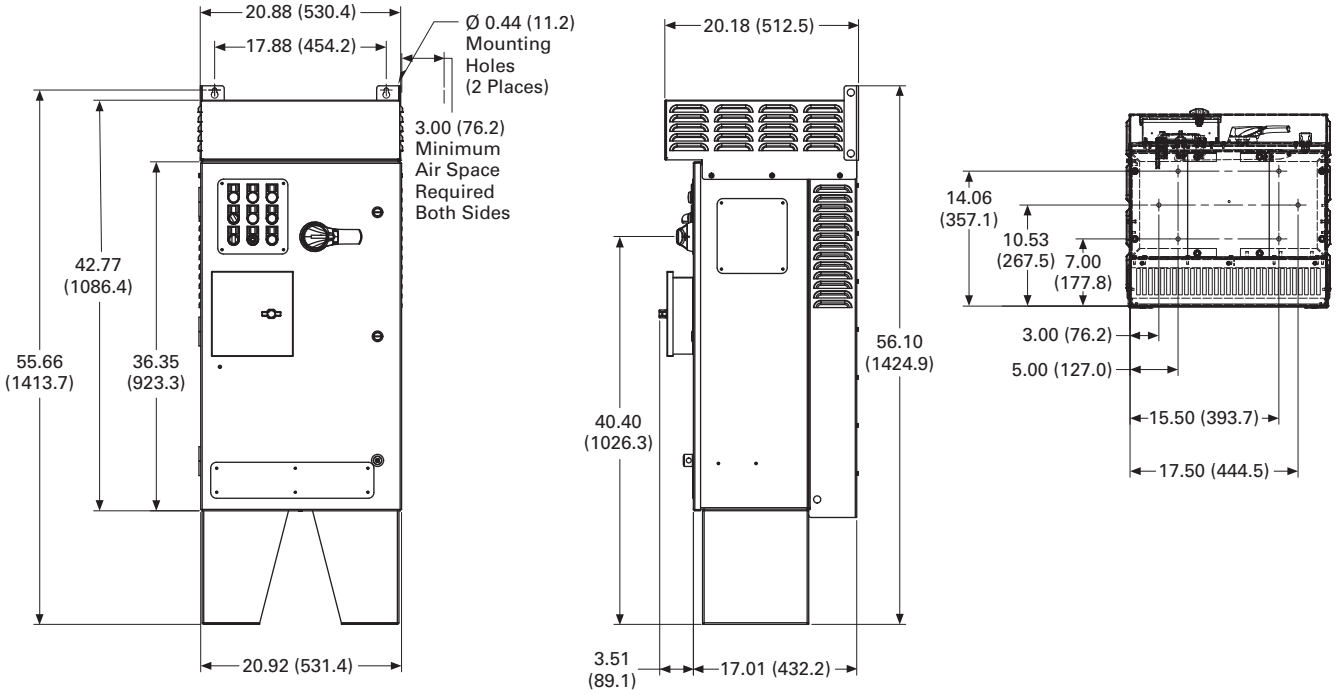

BX Box Type 3R—22 Inch Floor Stands

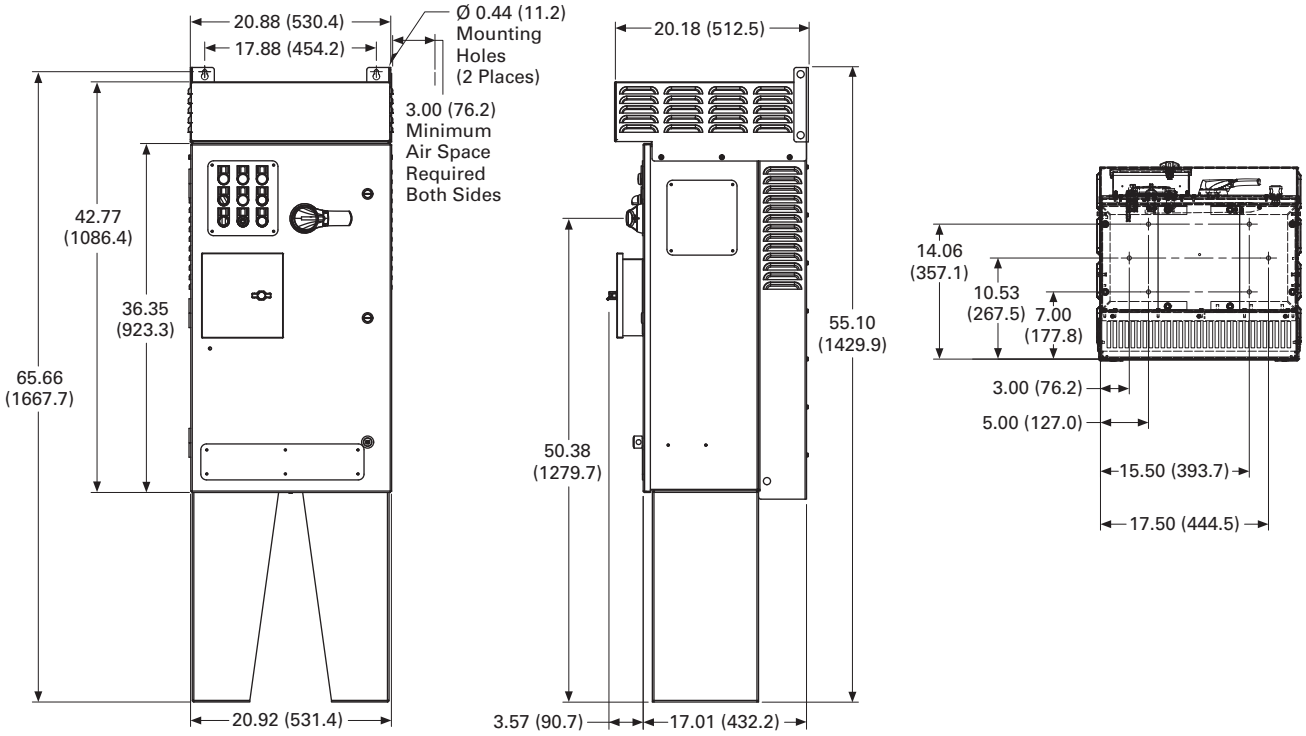

Approximate Dimensions in Inches (mm)

CX Box Type 1

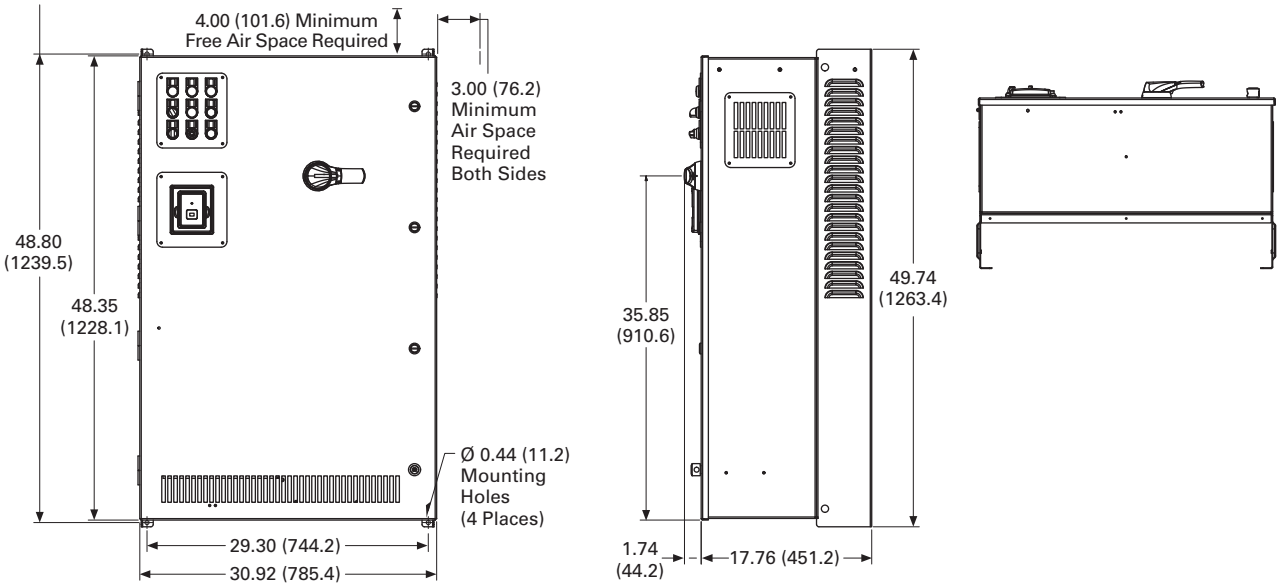

CX Box Type 1—12 Inch Floor Stands

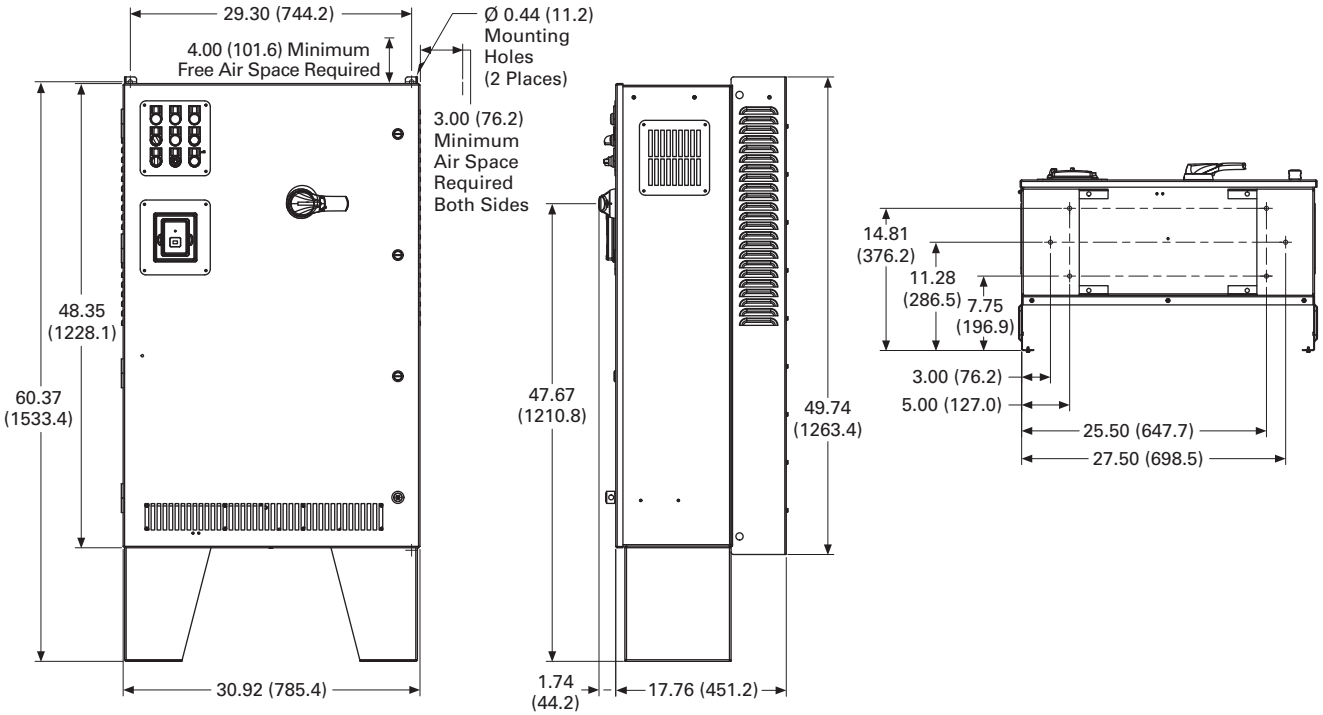

Approximate Dimensions in Inches (mm)

CX Box Type 1—22 Inch Floor Stands

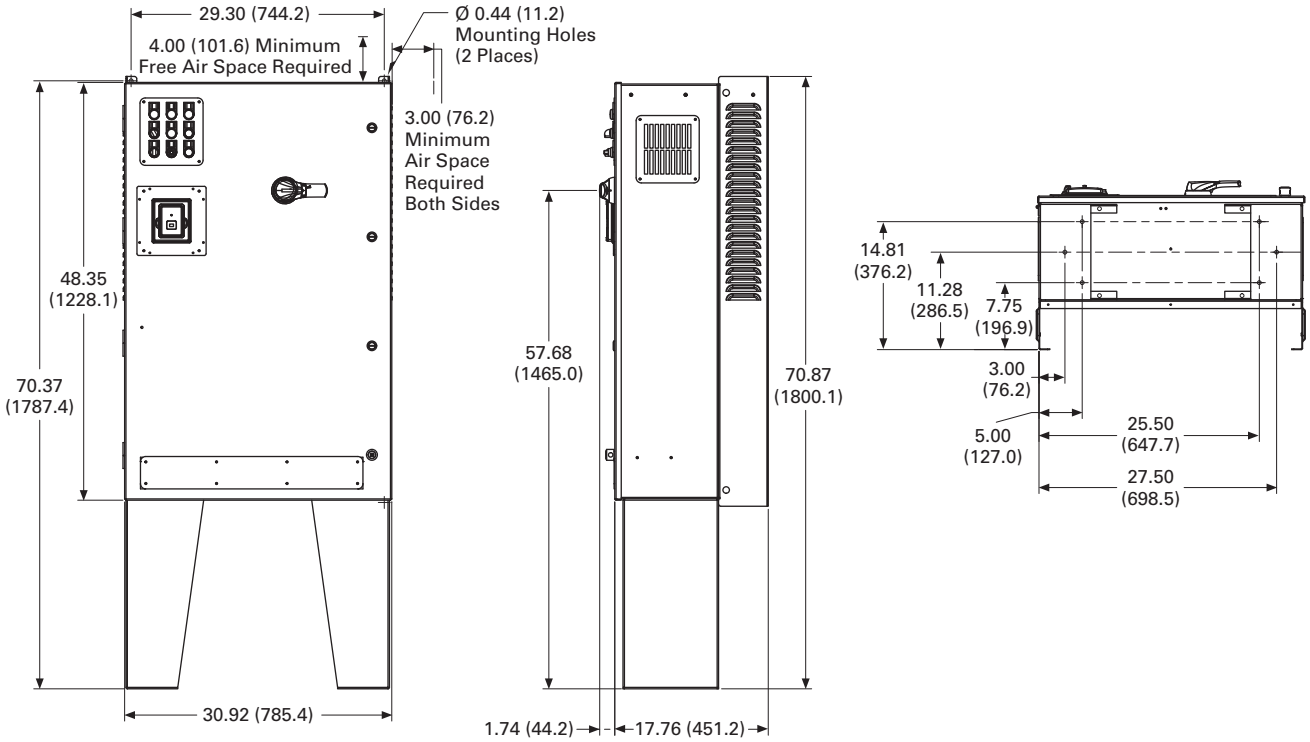

CX Box Type 12

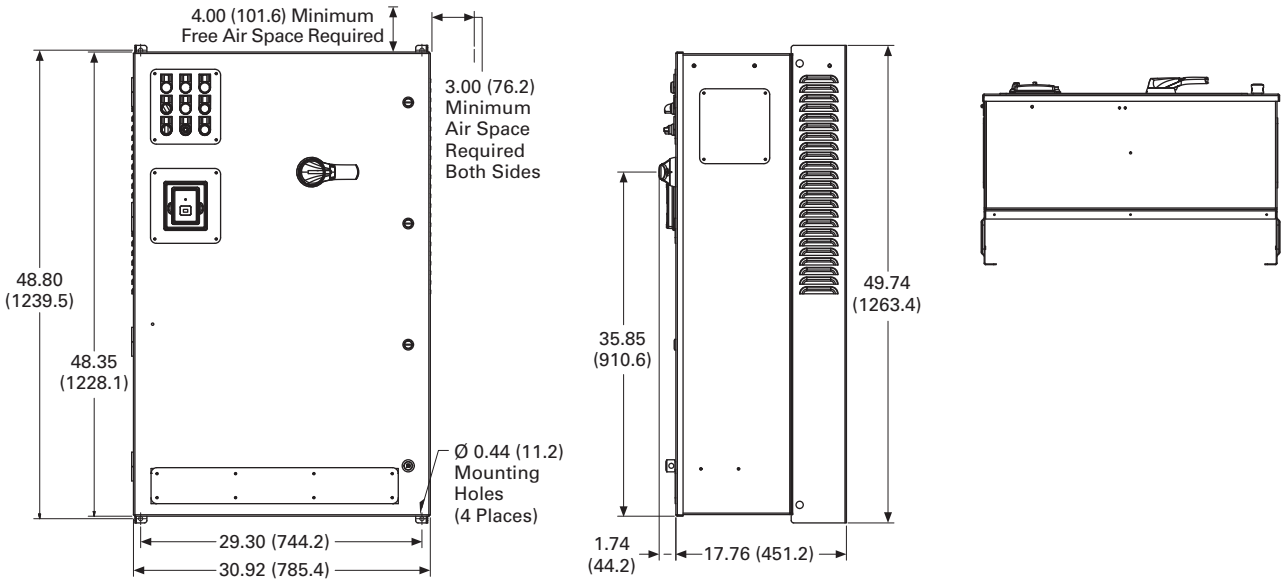

Approximate Dimensions in Inches (mm)

CX Box Type 12—12 Inch Floor Stands

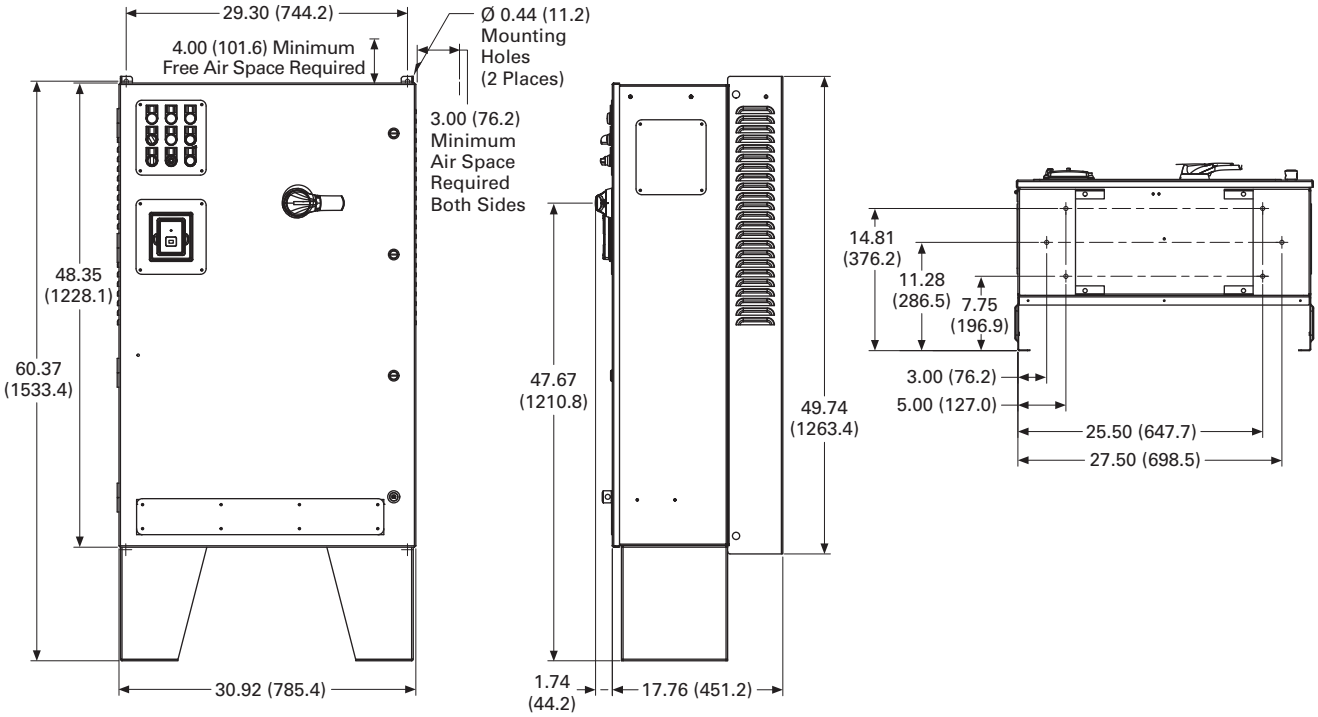

CX Box Type 12—22 Inch Floor Stands

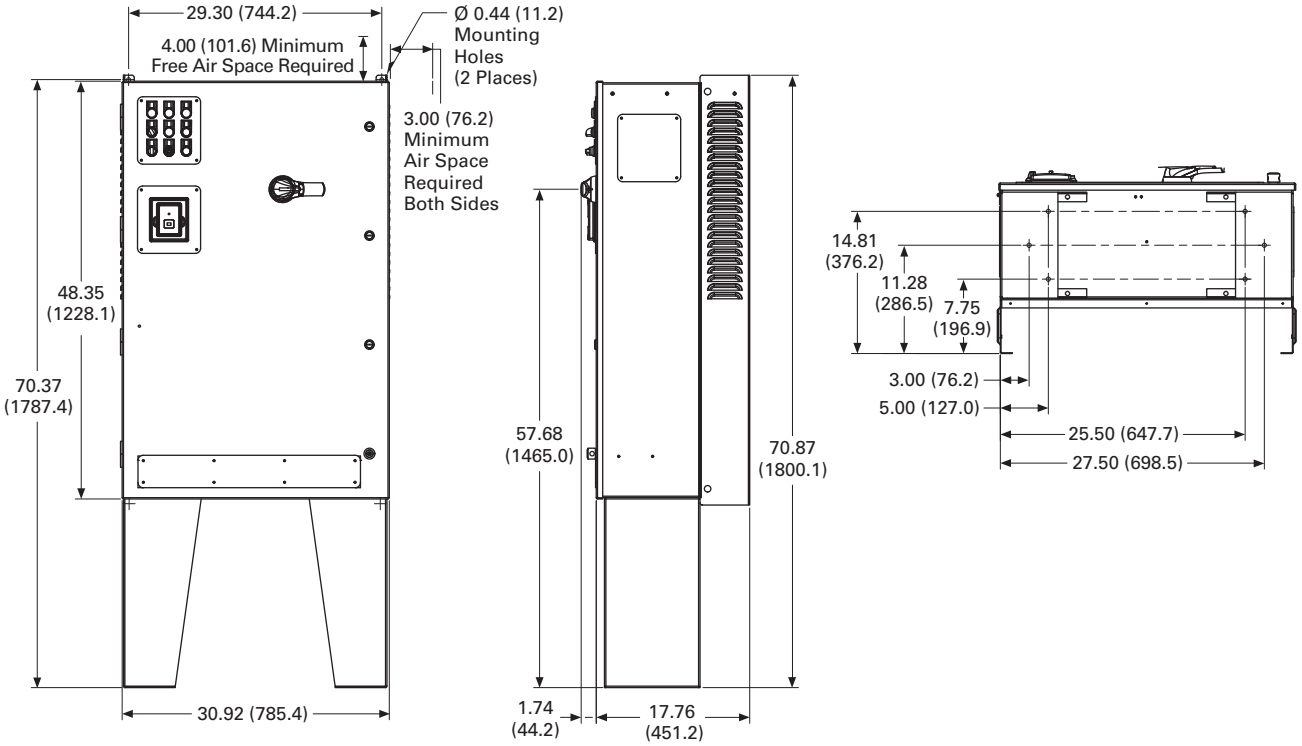

Approximate Dimensions in Inches (mm)

CX Box Type 3R

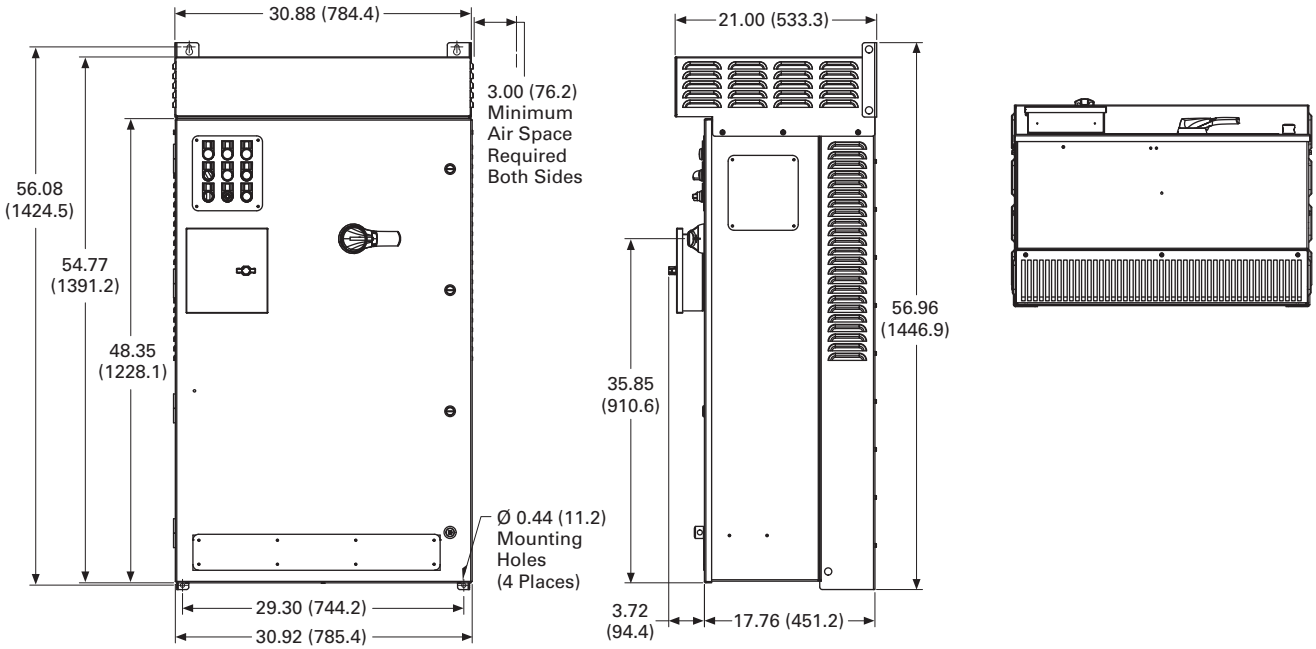

CX Box Type 3R—12 Inch Floor Stands

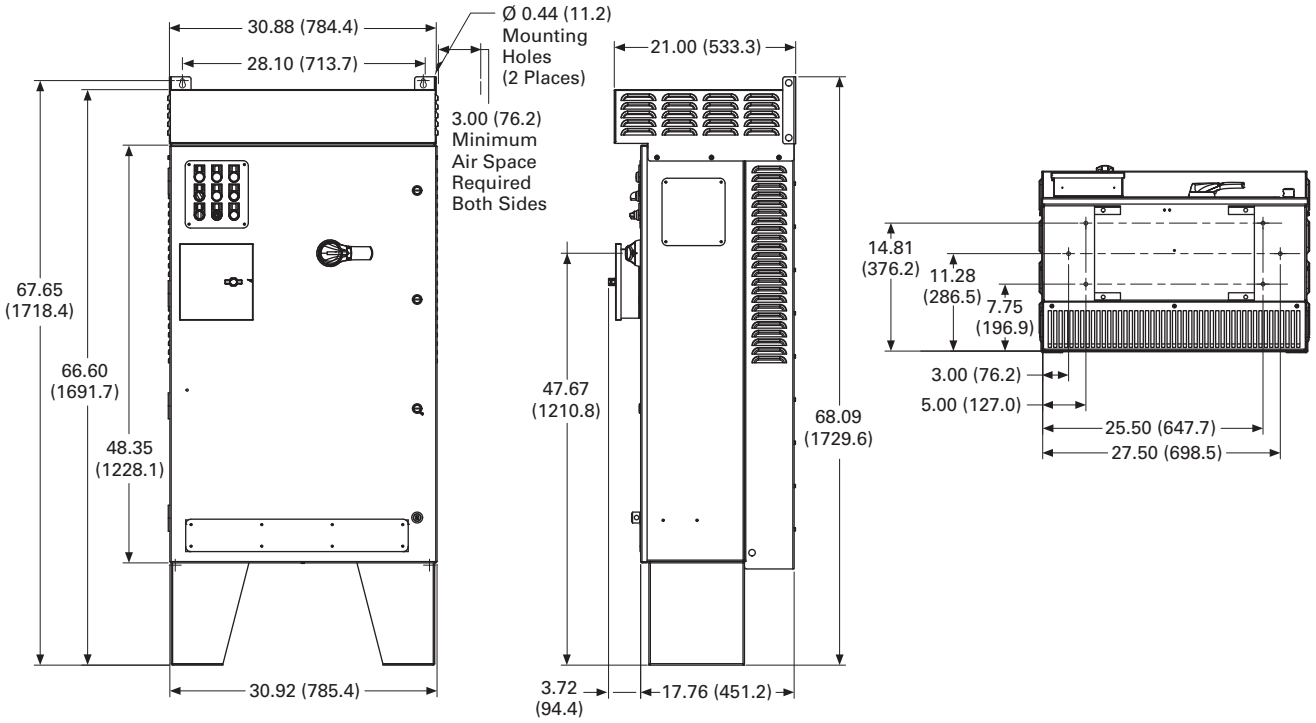

Approximate Dimensions in Inches (mm)

CX Box Type 3R—22 Inch Floor Stands

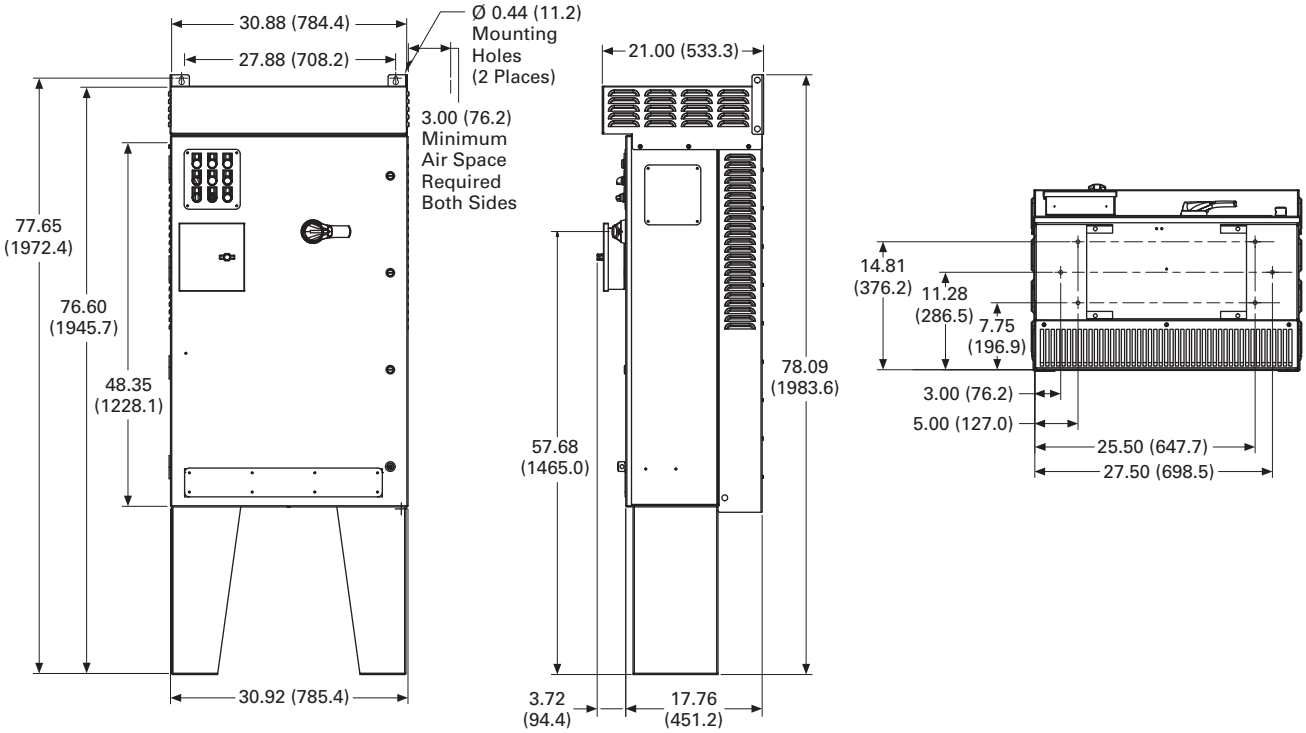

DX Box Type 1

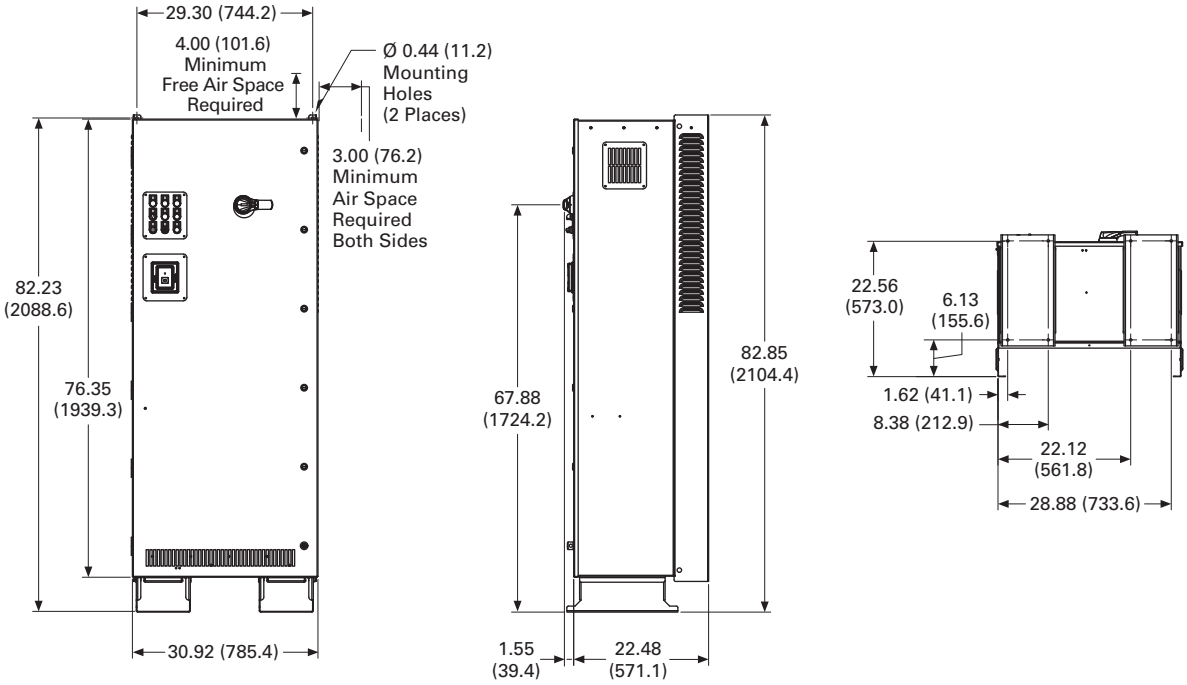

Approximate Dimensions in Inches (mm)

DX Box Type 12

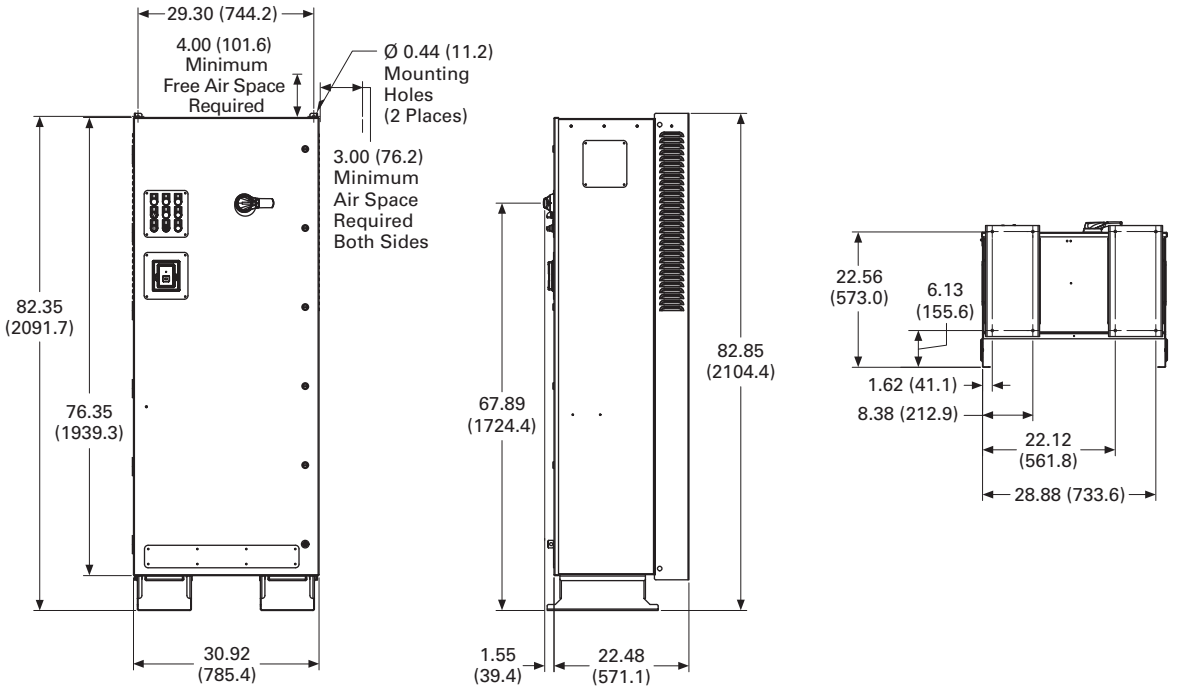

DX Box Type 3R

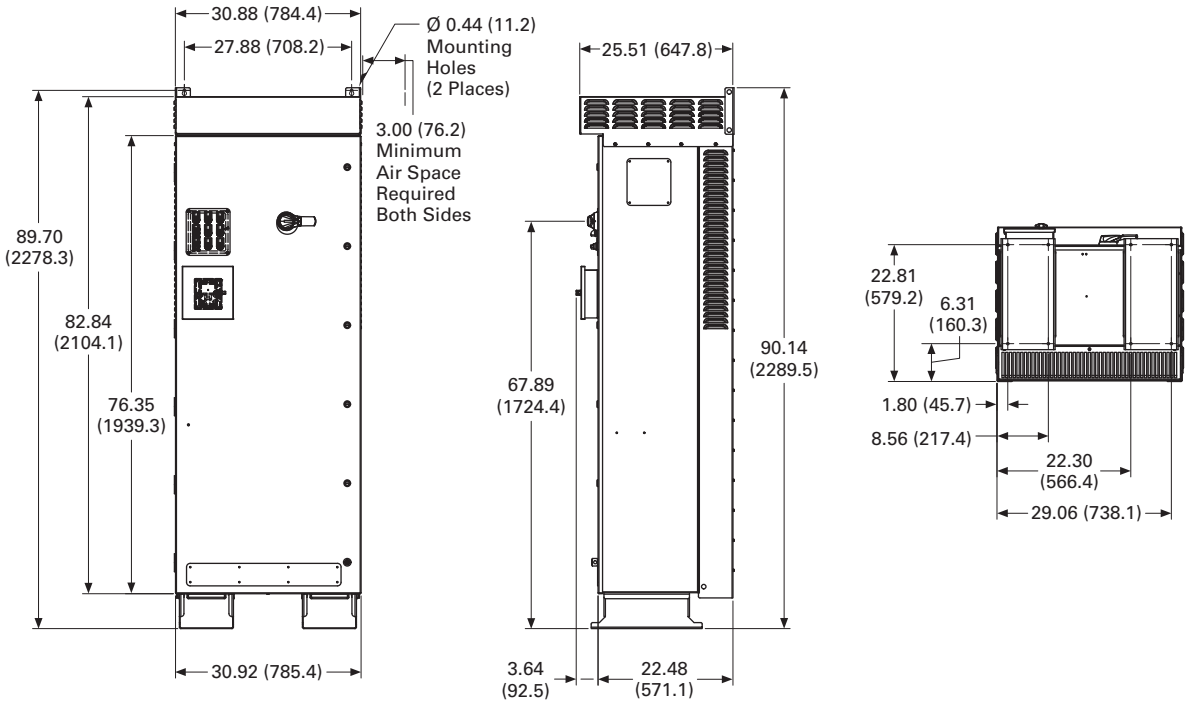

SVX Drives

Contents

Description	*Page*
SVX Drives	
Standards and Certifications	**V6-T2-98**
Catalog Number Selection	**V6-T2-98**
Product Selection	**V6-T2-99**
Accessories	**V6-T2-103**
Options	**V6-T2-104**
Replacement Parts	**V6-T2-111**
Technical Data and Specifications	**V6-T2-118**
Dimensions	**V6-T2-119**
SVX Enclosed Drives	**V6-T2-135**

SVX Drives

Product Description

SVX Series Adjustable Frequency Drives from Eaton's Electrical Sector are the next generation of drives specifically engineered for today's commercial and industrial applications. The power unit makes use of the most sophisticated semiconductor technology and a highly modular construction that can be flexibly adapted to the customer's needs.

The input and output configuration (I/O) is designed with modularity in mind. The I/O is compromised of option cards, each with its own input and output configuration. The control module is designed to accept a total of five of these cards. The cards contain not only normal analog and digital inputs but also fieldbus cards.

These drives continue the tradition of robust performance, and raise the bar on features and functionality, ensuring the best solution at the right price.

Features

- Robust design—proven 500,000 hours MTBF
- Integrated 3% line reactors standard on drives from FR4 through FR9
- EMI/RFI Filters H standard up to 200 hp I_H 480 V, 100 hp I_H 230 V
- Simplified operating menu allows for typical programming changes, while programming mode provides control of everything
- Quick Start Wizard built into the programming of the drive ensures a smooth start-up
- Keypad can display up to three monitored parameters simultaneously
- LOCAL/REMOTE operation from keypad
- Copy/paste function allows transfer of parameter settings from one drive to the next
- Standard NEMA Type 12/IP54 keypad on all drives
- The SVX can be flexibly adapted to a variety of needs using our pre-installed "Seven in One" precision application programs consisting of:
  - Basic
  - Standard
  - Local/remote
  - Multi step speed control
  - PID control
  - Multi-purpose control
  - Pump and fan control with auto change
- Additional I/O and communication cards provide plug and play functionality
- I/O connections with simple quick connection terminals
- Hand-held auxiliary 24 V power supply allows programming/monitoring of control module without applying full power to the drive
- Control logic can be powered from an external auxiliary control panel, internal drive functions and fieldbus if necessary
- Brake chopper standard from: 1–30 hp/380–500 V 3/4–15 hp/208–230 V
- NEMA Type 1/IP21 and NEMA Type 12/IP54 enclosures available, Frame Sizes FR4–FR9
- Open chassis FR10 and greater
- Standard option board configuration includes an A9 I/O board and an A2 relay output board installed in slots A and B

Standards and Certifications

Product
- IEC 61800-2

EMC (At Default Settings)
- Immunity: Fulfills all EMC immunity requirements; Emissions: EN 61800-3, LEVEL H

Safety
- UL 508C
- CE

Catalog Number Selection

SVX Adjustable Frequency Drives

SVX 010 A 1 – 4 A 1 B 1 _ _ _ _ _ _

Product Family
SVX = Open drives
SPX = Open drives FR10 and greater

Horsepower Rating

F07 = 3/4 hp	**800** = 800 hp
F15 = 1-1/2 hp	**900** = 900 hp
007 = 7-1/2 hp	**H10** = 1000 hp
010 = 10 hp	**H12** = 1200 hp
050 = 50 hp	**H13** = 1350 hp
125 = 125 hp	**H15** = 1500 hp
350 = 350 hp	**H16** = 1600 hp
700 = 700 hp	**H20** = 2000 hp

AFD Software Series
A = Standard software

Enclosure ③
0 = Chassis
1 = NEMA Type 1/IP21
2 = NEMA Type 12/IP54

Voltage Rating
2 = 230 V (208–240)
4 = 480 V (380–500)
5 = 575 V (525–690)

Keypad
A = Alphanumeric

Input Options ①
1 = Three-phase, EMC H
2 = Three-phase, EMC N
3 = Three-phase, EMC T ⑤
4 = Three-phase, EMC L

Brake Chopper Options ②
N = No brake chopper circuit
B = Internal brake chopper circuit

Board Modifications
1 = Standard boards
2 = Conformal (varnished) coating ④

Options
Options appear in alphabetical order.

Extended I/O Card Options
B1 = 6 DI, 1 ext +24 Vdc/EXT +24 Vdc
B2 = 1 RO (NC-NO), 1 RO (NO), 1 therm
B4 = 1 AI (mA isolated), 2 AO (mA isolated), 1 ext +24 Vdc/EXT + 24 Vdc
B5 = 3 RO (NO)
B8 = 1 ext +24 Vdc/EXT +24 Vdc, 3 Pt100
B9 = 1 RO (NO), 5 DI 42–240 Vac input

Communication Cards
CA = Johnson Controls N2
CI = Modbus TCP
CJ = BACnet
CQ = EtherNet/IP
C2 = Modbus
C3 = PROFIBUS DP
C4 = LonWorks
C5 = PROFIBUS DP (D9 connector)
C6 = CANopen (slave)
C7 = DeviceNet
C8 = Modbus (D9 Type connector)
D3 = RS-232 with D9 connection

Notes

① All 230 V drives and 480 V drives up to 200 hp (IH) are only available with input option **1** (EMC Level H). 480 V drives 250 hp (IH) or larger are available with input option **2** (EMC Level N). 480 V drives are available with input option **4** (EMC Level L). 575 V drives 200 hp (IH) or larger are only available with input option **2**. 575 V drives up to 150 hp (IH) are only available with input option **4** (EMC Level L).

② 480 V drives up to 30 hp (IH) are only available with brake chopper option **B**. 480 V drives 40 hp (IH) or larger come standard with brake chopper option **N**. 230 V drives up to 15 hp (IH) are only available with brake chopper option **B**. 230 V drives 20 hp or larger come standard with brake chopper option **N**. All 575 V drives come standard without brake chopper option (N). **N** = **No** brake chopper.

③ 480 V drives 250 hp (I_H) and larger are available with enclosure style **0** (chassis); 690 V drives 200 hp (I_H) and larger are available with enclosure style **0** (chassis).

④ Factory promise delivery. Consult sales office for availability.

⑤ For high-resistance ground systems, any SVX/SPX drive can be used if the HRG system has ground supervision. If no ground supervision feature is available, use EMC class N or T.

Product Selection

230 V SVX Drives

SVX Open Drives

208–240 V, NEMA Type 1/IP21 Drives

Frame Size	hp (I_H)	Current (I_H)	hp (I_L)	Current (I_L)	Catalog Number
FR4	3/4	3.7	1	4.8	**SVXF07A1-2A1B1**
	1	4.8	1-1/2	6.6	**SVX001A1-2A1B1**
	1-1/2	6.6	2	7.8	**SVXF15A1-2A1B1**
	2	7.8	3	11	**SVX002A1-2A1B1**
	3	11	—	12.5	**SVX003A1-2A1B1**
FR5	—	12.5	5	17.5	**SVX004A1-2A1B1**
	5	17.5	7-1/2	25	**SVX005A1-2A1B1**
	7-1/2	25	10	31	**SVX007A1-2A1B1**
FR6	10	31	15	48	**SVX010A1-2A1B1**
	15	48	20	61	**SVX015A1-2A1B1**
FR7	20	61	25	75	**SVX020A1-2A1N1**
	25	75	30	88	**SVX025A1-2A1N1**
	30	88	40	114	**SVX030A1-2A1N1**
FR8	40	114	50	140	**SVX040A1-2A1N1**
	50	140	60	170	**SVX050A1-2A1N1**
	60	170	75	205	**SVX060A1-2A1N1**
FR9	75	205	100	261	**SVX075A1-2A1N1**
	100	261	125	300	**SVX100A1-2A1N1**

208–240 V, NEMA Type 12/IP54 Drives

Frame Size	hp (I_H)	Current (I_H)	hp (I_L)	Current (I_L)	Catalog Number
FR4	3/4	3.7	1	4.8	**SVXF07A2-2A1B1**
	1	4.8	1-1/2	6.6	**SVX001A2-2A1B1**
	1-1/2	6.6	2	7.8	**SVXF15A2-2A1B1**
	2	7.8	3	11	**SVX002A2-2A1B1**
	3	11	—	12.5	**SVX003A2-2A1B1**
FR5	—	12.5	5	17.5	**SVX004A2-2A1B1**
	5	17.5	7-1/2	25	**SVX005A2-2A1B1**
	7-1/2	25	10	31	**SVX007A2-2A1B1**
FR6	10	31	15	48	**SVX010A2-2A1B1**
	15	48	20	61	**SVX015A2-2A1B1**
FR7	20	61	25	75	**SVX020A2-2A1N1**
	25	75	30	88	**SVX025A2-2A1N1**
	30	88	40	114	**SVX030A2-2A1N1**
FR8	40	114	50	140	**SVX040A2-2A1N1**
	50	140	60	170	**SVX050A2-2A1N1**
	60	170	75	205	**SVX060A2-2A1N1**
FR9	75	205	100	261	**SVX075A2-2A1N1**
	100	261	125	300	**SVX100A2-2A1N1**

480 V SVX Drives

SVX Open Drives

380–500 V, NEMA Type 1/IP21 Drives

Frame Size	hp (I_H)	Current (I_H)	hp (I_L)	Current (I_L)	Catalog Number
FR4	1	2.2	1-1/2	3.3	**SVX001A1-4A1B1**
	1-1/2	3.3	2	4.3	**SVXF15A1-4A1B1**
	2	4.3	3	5.6	**SVX002A1-4A1B1**
	3	5.6	5	7.6	**SVX003A1-4A1B1**
	5	7.6	—	9	**SVX005A1-4A1B1**
	—	9	7-1/2	12	**SVX006A1-4A1B1**
FR5	7-1/2	12	10	16	**SVX007A1-4A1B1**
	10	16	15	23	**SVX010A1-4A1B1**
	15	23	20	31	**SVX015A1-4A1B1**
FR6	20	31	25	38	**SVX020A1-4A1B1**
	25	38	30	46	**SVX025A1-4A1B1**
	30	46	40	61	**SVX030A1-4A1B1**
FR7	40	61	50	72	**SVX040A1-4A1N1**
	50	72	60	87	**SVX050A1-4A1N1**
	60	87	75	105	**SVX060A1-4A1N1**
FR8	75	105	100	140	**SVX075A1-4A1N1**
	100	140	125	170	**SVX100A1-4A1N1**
	125	170	150	205	**SVX125A1-4A1N1**
FR9	150	205	200	261	**SVX150A1-4A1N1**
	200	245	250	300	**SVX200A1-4A1N1**

380–500 V, NEMA Type 12/IP54 Drives

Frame Size	hp (I_H)	Current (I_H)	hp (I_L)	Current (I_L)	Catalog Number
FR4	1	2.2	1-1/2	3.3	**SVX001A2-4A1B1**
	1-1/2	3.3	2	4.3	**SVXF15A2-4A1B1**
	2	4.3	3	5.6	**SVX002A2-4A1B1**
	3	5.6	5	7.6	**SVX003A2-4A1B1**
	5	7.6	—	9	**SVX005A2-4A1B1**
	—	9	7-1/2	12	**SVX006A2-4A1B1**
FR5	7-1/2	12	10	16	**SVX007A2-4A1B1**
	10	16	15	23	**SVX010A2-4A1B1**
	15	23	20	31	**SVX015A2-4A1B1**
FR6	20	31	25	38	**SVX020A2-4A1B1**
	25	38	30	46	**SVX025A2-4A1B1**
	30	46	40	61	**SVX030A2-4A1B1**
FR7	40	61	50	72	**SVX040A2-4A1N1**
	50	72	60	87	**SVX050A2-4A1N1**
	60	87	75	105	**SVX060A2-4A1N1**
FR8	75	105	100	140	**SVX075A2-4A1N1**
	100	140	125	170	**SVX100A2-4A1N1**
	125	170	150	205	**SVX125A2-4A1N1**
FR9	150	205	200	261	**SVX150A2-4A1N1**
	200	245	250	300	**SVX200A2-4A1N1**

SVX Open Drives

380–500 V, Open Chassis Drives

Frame Size	hp (I_H)	Current (I_H)	hp (I_L)	Current (I_L)	Catalog Number
FR10 ①	250	330	300	385	**SPX250A0-4A2N1**
	300	385	350	460	**SPX300A0-4A2N1**
	350	460	400	520	**SPX350A0-4A2N1**
FR11	400	520	500	590	**SPX400A0-4A2N1**
	500	590	—	650	**SPX500A0-4A2N1**
	—	650	600	730	**SPX550A0-4A2N1**
FR12	600	730	—	820	**SPX600A0-4A2N1**
	—	820	700	920	**SPX650A0-4A2N1**
	700	920	800	1030	**SPX700A0-4A2N1**
FR13	800	1030	900	1150	**SPX800A0-4A2N1**
	900	1150	1000	1300	**SPX900A0-4A2N1**
	1000	1300	1200	1450	**SPXH10A0-4A2N1**
FR14	1200	1600	1500	1770	**SPXH12A0-4A2N1**
	1600	1940	1800	2150	**SPXH16A0-4A2N1**
	1900	2300	2200	2700	**SPXH19A0-4A2N1**

575 V SVX Drives

525–690 V, NEMA Type 1/IP21 Drives

Frame Size	hp (I_H)	Current (I_H)	hp (I_L)	Current (I_L)	Catalog Number
FR6	2	3.3	3	4.5	**SVX002A1-5A4N1**
	3	4.5	—	5.5	**SVX003A1-5A4N1**
	—	5.5	5	7.5	**SVX004A1-5A4N1**
	5	7.5	7-1/2	10	**SVX005A1-5A4N1**
	7-1/2	10	10	13.5	**SVX007A1-5A4N1**
	10	13.5	15	18	**SVX010A1-5A4N1**
	15	18	20	22	**SVX015A1-5A4N1**
	20	22	25	27	**SVX020A1-5A4N1**
	25	27	30	34	**SVX025A1-5A4N1**
FR7	30	34	40	41	**SVX030A1-5A4N1**
	40	41	50	52	**SVX040A1-5A4N1**
FR8	50	52	60	62	**SVX050A1-5A4N1**
	60	62	75	80	**SVX060A1-5A4N1**
	75	80	100	100	**SVX075A1-5A4N1**
FR9	100	100	125	125	**SVX100A1-5A4N1**
	125	125	150	144	**SVX125A1-5A4N1**
	150	144	—	170	**SVX150A1-5A4N1**
	—	170	200	208	**SVX175A1-5A4N1**

Note

① FR10–FR14 includes 3% line reactor, but it is not integral to chassis.

SVX Open Drives

525–690 V, NEMA Type 12/IP54 Drives

Frame Size	hp (I_H)	Current (I_H)	hp (I_L)	Current (I_L)	Catalog Number
FR6	2	3.3	3	4.5	**SVX002A2-5A4N1**
	3	4.5	—	5.5	**SVX003A2-5A4N1**
	—	5.5	5	7.5	**SVX004A2-5A4N1**
	5	7.5	7-1/2	10	**SVX005A2-5A4N1**
	7-1/2	10	10	13.5	**SVX007A2-5A4N1**
	10	13.5	15	18	**SVX010A2-5A4N1**
	15	18	20	22	**SVX015A2-5A4N1**
	20	22	25	27	**SVX020A2-5A4N1**
	25	27	30	34	**SVX025A2-5A4N1**
FR7	30	34	40	41	**SVX030A2-5A4N1**
	40	41	50	52	**SVX040A2-5A4N1**
FR8	50	52	60	62	**SVX050A2-5A4N1**
	60	62	75	80	**SVX060A2-5A4N1**
	75	80	100	100	**SVX075A2-5A4N1**
FR9	100	100	125	125	**SVX100A2-5A4N1**
	125	125	150	144	**SVX125A2-5A4N1**
	150	144	—	170	**SVX150A2-5A4N1**
	—	170	200	208	**SVX175A2-5A4N1**

525–690 V, Open Chassis Drives

Frame Size	hp (I_H)	Current (I_H)	hp (I_L)	Current (I_L)	Catalog Number
FR10	200	208	250	261	**SPX200A0-5A2N1**
	250	261	300	325	**SPX250A0-5A2N1**
	300	325	400	385	**SPX300A0-5A2N1**
FR11	400	385	450	460	**SPX400A0-5A2N1**
	450	460	500	502	**SPX450A0-5A2N1**
	500	502	—	590	**SPX500A0-5A2N1**
FR12	—	590	600	650	**SPX550A0-5A2N1**
	600	650	700	750	**SPX600A0-5A2N1**
	700	750	800	820	**SPX700A0-5A2N1**
FR13	800	820	900	920	**SPX800A0-5A2N1**
	900	920	1000	1030	**SPX900A0-5A2N1**
	1000	1030	1250	1180	**SPXH10A0-5A2N1**
FR14	1350	1300	1500	1500	**SPXH13A0-5A2N1**
	1500	1500	2000	1900	**SPXH15A0-5A2N1**
	2000	1900	2300	2250	**SPXH20A0-5A2N1**

Accessories

Demo Drive and Power Supply

Demo Drive and Power Supply

Description	Catalog Number
9000X demo drive	**9000XDEMO**

9000X Series—SVX/SPX Conversion and Flange Kits

The Type 12/IP54 option kit is used to convert a Type 1/IP21 to a Type 12/IP54 drive. The kit includes:

NEMA Type 12 / IP54 Conversion Kits

Frame Size	Catalog Number
Frame 4 Type 12/IP54 kit	**OPTN12FR4**
Frame 5 Type 12/IP54 kit	**OPTN12FR5**
Frame 6 Type 12/IP54 kit	**OPTN12FR6**

Flange Kits

The flange kit is used when the power section heat sink is mounted through the back panel of an enclosure. The kit includes hardware and supporting steel plates.

NEMA Type 12 / IP54 Conversion Kits

Kit

Frame Size	Catalog Number
Frame 4 flange kit Type 12/IP54	**OPTTHR4**
Frame 5 flange kit Type 12/IP54	**OPTTHR5**
Frame 6 flange kit Type 12/IP54	**OPTTHR6**
Frame 7 flange kit Type 12/IP54	**OPTTHR7**
Frame 8 flange kit Type 12/IP54	**OPTTHR8**
Frame 9 flange kit Type 12/IP54	**OPTTHR9**

Options

SVX Series Option Board Kits

The SVX Series drives can accommodate a wide selection of expander and adapter option boards to customize the drive for your application needs. The drive's control unit is designed to accept a total of five option boards.

The SVX Series factory installed standard board configuration includes an A9 I/O board and an A2 relay output board, which are installed in slots A and B.

Option Boards

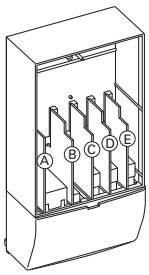

Option Board Kits

Option Kit Description ①	Allowed Slot Locations ②	Field Installed Catalog Number	Factory Installed Option Designator	SVX Ready Programs Basic	Local/ Remote	Standard	MSS	PID	Multi-P.	PFC
Standard I/O Cards										
6 DI, 1 DO, 2 AI, 1 AO, 1 +10 Vdc ref, 2 ext +24 Vdc/EXT +24 Vdc	A	**OPTA9**	—	■	■	■	■	■	■	■
2 RO (NC-NO)	B	**OPTA2**	—	■	■	■	■	■	■	■
Extended I/O Cards										
2 RO, therm	B	**OPTA3**	**A3**	—	■	■	■	■	■	■
Encoder low volt +5 V/15 V/24 V—SPX only	C	**OPTA4**	**A4**	—	■	■	■	■	■	■
Encoder high volt +15 V/24 V—SPX only	C	**OPTA5**	**A5**	—	■	■	■	■	■	■
Double encoder—SPX only	C	**OPTA7**	**A7**	■	■	■	■	■	■	■
6 DI, 1 DO, 2 AI, 1 AO	A	**OPTA8**	**A8**	—	■	■	■	■	■	■
3 DI (encoder 10–24 V), out +15 V/+24 V, 2 DO (pulse+direction)—SPX only	C	**OPTAE**	**AE**	■	■	■	■	■	■	■
6 DI, 1 ext +24 Vdc/EXT +24 Vdc	B, C, **D**, E	**OPTB1**	**B1**	—	—	—	—	—	■	■
1 RO (NC-NO), 1 RO (NO), 1 therm	B, C, **D**, E	**OPTB2**	**B2**	—	—	—	—	—	■	■
1 AI (mA isolated), 2 AO (mA isolated), 1 ext +24 Vdc/EXT +24 Vdc	B, C, **D**, E	**OPTB4**	**B4**	■	■	■	■	■	■	■
3 RO (NO)	B, C, **D**, E	**OPTB5**	**B5**	—	—	—	—	—	■	■
1 ext +24 Vdc/EXT +24 Vdc, 3 Pt100	B, C, **D**, E	**OPTB8**	**B8**	—	—	—	—	—	—	—
1 RO (NO), 5 DI 42–240 Vac input	B, C, **D**, E	**OPTB9**	**B9**	—	—	—	—	—	■	■
Communication Cards										
Modbus RTU	D, E	OPTC2	C2	■	■	■	■	■	■	■
Modbus RTU (D9 connector)	D, E	OPTC8	C8	■	■	■	■	■	■	■
PROFIBUS DP	D, E	OPTC3	C3	■	■	■	■	■	■	■
PROFIBUS DP (D9 connector)	D, E	OPTC5	C5	■	■	■	■	■	■	■
Johnson Controls N2	D, E	OPTC2	CA	—	—	—	—	—	—	—
BACnet MSTP	D, E	OPTCJ	CJ	■	■	■	■	■	■	■
LonWorks	D, E	OPTC4	C4	■	■	■	■	■	■	■
CANopen (slave)	D, E	OPTC6	C6	■	■	■	■	■	■	■
DeviceNet	D, E	OPTC7	C7	■	■	■	■	■	■	■
Modbus TCP	D, E	OPTCI	CI	■	■	■	■	■	■	■
EtherNet/IP	D, E	OPTCQ	CQ	■	■	■	■	■	■	■
PROFINET, Modbus TCP, EtherNet/IP (dual-port) ④	D, E	OPTE9	E9	■	■	■	■	■	■	■
EtherCAT (dual-port) ④	D, E	OPTEC	EC	■	■	■	■	■	■	■
SPX adapter	D, E	OPTD1	D1	■	■	■	■	■	■	■
SPX adapter	D, E	OPTD2	D2	■	■	■	■	■	■	■
RS-232 adapter	D, E	OPTD3	D3	■	■	■	■	■	■	■

Notes

① AI = Analog Input; AO = Analog Output, DI = Digital Input, DO = Digital Output, RO = Relay Output
② Option card must be installed in one of the slots listed for that card. Slot indicated in bold is the preferred location.
③ OPTC2 is a multi-protocol option card.
④ Available October 2016.

Modbus RTU Network Communications

The Modbus Network Card OPTC2 is used for connecting the SVX Drive as a slave on a Modbus network. The interface is connected by a 9-pin DSUB connector (female) and the baud rate ranges from 300 to 19,200 baud. Other communication parameters include an address range from 1 to 247; a parity of None, Odd or Even; and the stop bit is 1.

PROFIBUS Network Communications

The PROFIBUS Network Card OPTC3 is used for connecting the SVX Drive as a slave on a PROFIBUS-DP network. The interface is connected by a 9-pin DSUB connector (female). The baud rates range from 9.6 Kbaud to 12 Mbaud, and the addresses range from 1 to 127.

LonWorks Network Communications

The LonWorks Network Card OPTC4 is used for connecting the SVX Drive on a LonWorks network. This interface uses Standard Network Variable Types (SNVT) as data types. The channel connection is achieved using a FTT-10 A Free Topology transceiver via a single twisted transfer cable. The communication speed with LonWorks is 78 kBits/s.

CANopen (Slave) Communications

The CANopen (Slave) Network Card OPTC6 is used for connecting the SVX Drive to a host system. According to ISO11898 standard cables to be chosen for CANbus should have a nominal impedance of 120 ohms, and specific line delay of nominal 5 nS/m. 120 ohms line termination resistors required for installation.

DeviceNet Network Communications

The DeviceNet Network Card OPTC7 is used for connecting the SVX Drive on a DeviceNet Network. It includes a 5.08 mm pluggable connector. Transfer method is via CAN using a two-wire twisted shielded cable with two-wire bus power cable and drain. The baud rates used for communication include 125 Kbaud, 250 Kbaud and 500 Kbaud.

Johnson Controls Metasys N2 Network Communications

The OPTC2 fieldbus board provides communication between the SVX Drive and a Johnson Controls Metasys™ N2 network. With this connection, the drive can be controlled, monitored and programmed from the Metasys system. The N2 fieldbus is available as a factory installed option and as a field installable kit.

Modbus/TCP Network Communications

The Modbus/TCP Network Card OPTCI is used for connecting the SVX Drive to Ethernet networks utilizing Modbus protocol. It includes an RJ-45 pluggable connector. This interface provides a selection of standard and custom register values to communicate drive parameters. The board supports 10 Mbps and 100 Mbps communication speeds. The IP address of the board is configurable over Ethernet using a supplied software tool.

BACnet Network Communications

The BACnet Network Card OPTCJ is used for connecting the SVX Drive to BACnet networks. It includes a 5.08 mm pluggable connector. Data transfer is Master-Slave/Token Passing (MS/TP) RS-485. This interface uses a collection of 30 Binary Value Objects (BVOs) and 35 Analog Value Objects (AVOs) to communicate drive parameters. The card supports 9.6, 19.2 and 38.4 Kbaud communication speeds and supports network addresses 1–127.

EtherNet/IP Network Communications

The EtherNet/IP Network Card OPTCK is used for connecting the SVX Drive to Ethernet/Industrial Protocol networks. It includes an RJ-45 pluggable connector. The interface uses CIP objects to communicate drive parameters (CIP is "Common Industrial Protocol", the same protocol used by DeviceNet). The board supports 10 Mbps and 100 Mbps communication speeds. The IP address of the board is configurable by Static, BOOTP and DHCP methods.

Control Panel Options

Factory Options

Description	Factory Installed Option Code	Field Installed NEMA Type 1/IP21 Catalog Number
Local/Remote Keypad SVX Control Panel—This option is standard on all drives and consists of an RS-232 connection, backlit alphanumeric LCD display with nine indicators for the RUN status and two indicators for the control source. The nine pushbuttons on the panel are used for panel programming and monitoring of all SVX parameters. The panel is detachable and isolated from the input line potential. Include LOC/REM key to choose control location.	**A**	**KEYPAD-LOC/REM**
Keypad Remote Mounting Kit—This option is used to remote mount the SVX keypad. The footprint is compatible to the SV remote mount kit. Includes 10 ft cable, keypad holder and mounting hardware.	—	**OPTRMT-KIT-9000X**

Miscellaneous Options

Description	Catalog Number
9000XDrive—A PC-based tool for controlling and monitoring of the SVX. Features include: loading parameters that can be saved to a file or printed, setting references, starting and stopping the motor, monitoring signals in graphical or text form, and real-time display. To avoid damage to the drive or computer, SVDrivecable must be used.	**9000XDRIVE**
SVDrivecable—6 ft (1.8 m) RS-232 cable (22 gauge) with a 7-pin connector on each end. Should be used in conjunction with the 9000XDrive option to avoid damage to the SVX or computer. The same cable can be used for downloading specialized applications to the drive.	**SVDRIVECABLE**
External Dynamic Braking Resistors—Used with the dynamic braking chopper circuit to absorb motor regenerative energy for stopping the load and to dissipate the energy flowing back into the drive. Resistors are separated into standard duty and heavy-duty. Standard duty is defined as 20% duty or less with 100% braking torque, while heavy-duty is defined as 50% duty or less with 150% braking torque.	See **Page V6-T2-106**

Open Drive Options

Brake Chopper Options

The brake chopper circuit option is used for applications that require dynamic braking. Dynamic braking resistors are not included with drive purchase. Consult the factory for additional dynamic braking resistor selections that are supplied separately. A list of common resistors are listed below and are complete indoor assemblies, include a pre-wired terminal block and a thermal switch, and are not UL Listed.

Duty Cycle

The duty cycle rating is based on a 60-second period. For example, the 20% duty cycle resistor can carry 100% current for 12 seconds out of every 60 seconds, while the 50% duty cycle resistor can carry 150% current for 30 seconds out of every 60 seconds.

Torque

If the braking torque required is less than 15%, dynamic braking is not required because the regenerated energy will be dissipated in the drive and motor losses.

Dynamic Brake Resistor—Catalog Number Selection

DBR – R100 – W0800

Dynamic Brake Resistor	Resistance	Rated Watts
	1D0 = 1.0 Ohms **100** = 100 Ohms	**0800** = 800 Watts **8000** = 8000 Watts **080K** = 80,000 Watts

230 V Brake Resistors

Drive hp (CT/I_H)	Minimum Ohms	20% Duty Cycle, 100% Torque		50% Duty Cycle, 150% Torque	
		Catalog Number	Dimensions (Inches)	Catalog Number	Dimensions (Inches)
0.75	30.0	**DBR-R100-W0400**	12W x 5D x 5H	**DBR-R100-W0800**	12W x 7D x 5H
1	30.0	**DBR-R100-W0400**	12W x 5D x 5H	**DBR-R100-W0800**	12W x 7D x 5H
1.5	30.0	**DBR-R100-W0400**	12W x 5D x 5H	**DBR-R036-W1200**	12W x 10D x 5H
2	30.0	**DBR-R100-W0400**	12W x 5D x 5H	**DBR-R036-W1200**	12W x 10D x 5H
3	30.0	**DBR-R036-W0800**	12W x 7D x 5H	**DBR-R036-W2000**	12W x 16D x 5H
4	30.0	**DBR-R036-W0800**	12W x 7D x 5H	**DBR-R030-W2400**	19W x 10D x 5H
5	30.0	**DBR-R036-W0800**	12W x 7D x 5H	**DBR-R030-W2800**	19W x 13D x 5H
7.5	20.0	**DBR-R020-W1200**	12W x 10D x 5H	**DBR-R020-W4800**	26.5W x 13D x 5H
10	10.0	**DBR-R015-W1600**	12W x 13D x 5H	**DBR-R112-W6000**	26.5W x 13D x 5H
15	10.0	**DBR-R012-W2400**	19W x 10D x 5H	**DBR-R010-W9000**	28W x 10D x 10H
20	3.3	**DBR-R9D3-W3200**	19W x 10D x 5H	**DBR-R3D4-W012K**	28W x 10D x 10H
25	3.3	**DBR-R5D5-W4000**	26.5W x 10D x 5H	**DBR-R5D1-W015K**	28W x 16D x 10H
30	3.3	**DBR-R4D8-W4800**	26.5W x 10D x 5H	**DBR-R4D1-W020K**	28W x 16D x 10H
40	1.4	**DBR-R004-W6000**	26.5W x 13D x 5H	**DBR-R3D4-W025K**	30W x 18D x 16H
50	1.4	**DBR-R3D1-W7500**	26.5W x 16D x 5H	**DBR-R2D1-W030K**	30W x 18D x 24H
60	1.4	**DBR-R2D8-W9000**	26.5W x 16D x 5H	**DBR-R002-W036K**	30W x 18D x 24H
75	1.4	**DBR-R2D6-W012K**	28W x 10D x 10H	**DBR-R1D5-W045K**	30W x 18D x 32H
100	1.4	**DBR-R002-W015K**	28W x 16D x 10H	**DBR-R1D4-W060K**	30W x 18D x 40H

480 V Brake Resistors

Drive hp (CT/I_H)	Minimum Ohms	20% Duty Cycle, 100% Torque		50% Duty Cycle, 150% Torque	
		Catalog Number	Dimensions (Inches)	Catalog Number	Dimensions (Inches)
1	63.0	**DBR-R100-W0400**	12W x 5D x 5H	**DBR-R100-W0800**	12W x 7D x 5H
1.5	63.0	**DBR-R100-W0400**	12W x 5D x 5H	**DBR-R100-W1200**	12W x 10D x 5H
2	63.0	**DBR-R100-W0400**	12W x 5D x 5H	**DBR-R100-W1200**	12W x 10D x 5H
3	63.0	**DBR-R100-W0800**	12W x 7D x 5H	**DBR-R100-W2000**	12W x 16D x 5H
5	63.0	**DBR-R100-W0800**	12W x 7D x 5H	**DBR-R100-W2800**	19W x 13D x 5H
6	63.0	**DBR-R100-W1200**	12W x 10D x 5H	**DBR-R070-W4000**	19W x 16D x 5H
7.5	63.0	**DBR-R100-W1200**	12W x 10D x 5H	**DBR-R063-W4800**	26.5W x 13D x 5H
10	63.0	**DBR-R063-W1600**	12W x 13D x 5H	**DBR-R063-W6000**	26.5W x 16D x 5H
15	42.0	**DBR-R042-W2400**	19W x 10D x 5H	**DBR-R042-W9000**	28W x 10D x 10H
20	21.0	**DBR-R030-W3200**	19W x 13D x 5H	**DBR-R023-W012K**	28W x 13D x 10H
25	21.0	**DBR-R030-W4000**	19W x 16D x 5H	**DBR-R021-W015K**	28W x 13D x 10H
30	14.0	**DBR-R020-W4800**	26.5W x 13D x 5H	**DBR-R014-W020K**	30W x 18D x 24H
40	6.5	**DBR-R112-W6000**	26.5W x 13D x 5H	**DBR-R007-W025K**	30W x 18D x 16H
50	6.5	**DBR-R013-W7500**	26.5W x 16D x 5H	**DBR-R8D5-W030K**	30W x 18D x 24H
60	6.5	**DBR-R010-W9000**	28W x 10D x 10H	**DBR-R7D3-W036K**	30W x 18D x 24H
75	3.3	**DBR-R009-W012K**	28W x 13D x 10H	**DBR-R3D3-W045K**	30W x 18D x 32H
100	3.3	**DBR-R5D1-W015K**	28W x 16D x 10H	**DBR-R004-W060K**	30W x 18D x 40H
125	3.3	**DBR-R4D1-W020K**	28W x 16D x 10H	**DBR-R004-W070K**	30W x 18D x 48H
150	3.3	**DBR-R3D4-W025K**	30W x 18D x 16H	**DBR-R3D5-W085K**	30W x 18D x 56H
200	3.3	**DBR-R3D3-W030K**	30W x 18D x 24H	**DBR-R3D3-W110K**	30W x 18D x 72H
250	1.4	**DBR-R2D5-W036K**	30W x 18D x 24H	①	—
300	1.4	**DBR-R1D5-W045K**	30W x 18D x 32H	①	—
350	1.4	**DBR-R1D4-W060K**	30W x 18D x 40H	①	—
400	0.9	**DBR-R1D4-W060K**	30W x 18D x 40H	①	—
500	0.9	**DBR-R0D9-W080K**	30W x 18D x 48H	①	—
550	0.9	**DBR-R001-W085K**	30W x 18D x 56H	①	—

Note

① Consult factory.

575 V Brake Resistors

Drive hp (CT/I_H)	Minimum Ohms	20% Duty Cycle, 100% Torque		50% Duty Cycle, 150% Torque	
		Catalog Number	Dimensions (Inches)	Catalog Number	Dimensions (Inches)
2	100.0	**DBR-R100-W0400**	12W x 5D x 5H	**DBR-R100-W1200**	12W x 10D x 5H
3	100.0	**DBR-R100-W0800**	12W x 7D x 5H	**DBR-R100-W2000**	12W x 16D x 5H
4	100.0	**DBR-R100-W0800**	12W x 7D x 5H	**DBR-R100-W2400**	19W x 10D x 5H
5	100.0	**DBR-R100-W0800**	12W x 7D x 5H	**DBR-R100-W2800**	19W x 13D x 5H
7.5	100.0	**DBR-R100-W1200**	12W x 10D x 5H	**DBR-R100-W4800**	26.5W x 13D x 5H
10	30.0	**DBR-R063-W1600**	12W x 13D x 5H	**DBR-R063-W6000**	26.5W x 16D x 5H
15	30.0	**DBR-R042-W2400**	19W x 10D x 5H	**DBR-R042-W9000**	28W x 10D x 10H
20	30.0	**DBR-R030-W3200**	19W x 13D x 5H	**DBR-R030-W012K**	28W x 13D x 10H
25	30.0	**DBR-R030-W4000**	19W x 16D x 5H	**DBR-R030-W015K**	28W x 16D x 10H
30	18.0	**DBR-R020-W4800**	26.5W x 13D x 5H	**DBR-R020-W020K**	30W x 18D x 16H
40	18.0	**DBR-R030-W6000**	26.5W x 16D x 5H	**DBR-R184-W025K**	30W x 18D x 16H
50	9.0	**DBR-R013-W7500**	26.5W x 16D x 5H	**DBR-R012-W030K**	30W x 18D x 24H
60	9.0	**DBR-R010-W9000**	28W x 10D x 10H	**DBR-R010-W036K**	30W x 18D x 24H
75	9.0	**DBR-R009-W012K**	28W x 13D x 10H	**DBR-R009-W045K**	30W x 18D x 24H
100	7.0	**DBR-R013-W015K**	28W x 16D x 10H	**DBR-R8D4-W060K**	30W x 18D x 40H
125	7.0	**DBR-R8D2-W020K**	30W x 18D x 10H	**DBR-R007-W070K**	30W x 18D x 40H
150	7.0	**DBR-R007-W025K**	30W x 18D x 16H	**DBR-R006-W085K**	30W x 18D x 56H
175	7.0	**DBR-R007-W030K**	30W x 18D x 24H	**DBR-R007-W100K**	30W x 18D x 72H
200	2.5	**DBR-R3D3-W030K**	30W x 18D x 24H	**DBR-R2D6-W110K**	30W x 18D x 64H
250	2.5	**DBR-R2D5-W036K**	30W x 18D x 24H	**DBR-R003-W140K**	30W x 18D x 72H
300	2.5	**DBR-R3D3-W045K**	30W x 18D x 32H	①	—
400	1.7	**DBR-R002-W060K**	30W x 18D x 48H	①	—
450	1.7	**DBR-R1D8-W070K**	30W x 18D x 48H	①	—
500	1.7	**DBR-R002-W080K**	30W x 18D x 56H	①	—

Note

① Consult factory.

Line and Load Reactors

A line and load reactor is a three-phase inductance filter that can be placed on the line and load side of the AFD to help improve the harmonic performance of the system. Consult the factory for additional filtering options and further technical details.

DR1 Line Reactor

A line reactor helps to provide a moderate reduction in current harmonics similar to a DC choke. It also provides increased input protection for AFD and its semiconductors from line transients helping to extend the life of the AFD.

DR2 Output Reactor

An output filter is used to reduce the transient voltage (dV/dt) at the motor terminals. The output filter is recommended for cable lengths exceeding 100 ft (30 m) with a drive of 3 hp and above and for cable lengths of 33 ft (10 m) with a drive of 2 hp and below.

Line and Load Reactors—Catalog Number Selection

D R1 – 2 2D0 – 0 5

Basic Naming
D = Drive

Device Series
R1 = Line side reactor
R2 = Load side reactor

Input/Output Voltage
2 = 240 V
4 = 480 V
5 = 575 V

Current Rating
Examples:
2D0 = 2.0 A
4D0 = 4.0 A
8D0 = 8.0 A
012 = 12 A

Environment Rating
0 = Open
1 = NEMA 1

Impedance
3 = 3%
5 = 5%

Line and Load Reactors—230 V

	Open				NEMA 1			
	Line Reactor		Load Reactor		Line Reactor		Load Reactor	
hp (CT)	3%	5%	3%	5%	3%	5%	3%	5%
0.75	DR1-23D2-03	DR1-23D2-05	DR2-24D0-03	DR2-24D0-05	DR1-23D2-13	DR1-23D2-15	DR2-24D0-13	DR2-24D0-15
1	DR1-24D2-03	DR1-24D2-05	DR2-24D0-03	DR2-28D0-05	DR1-24D2-13	DR1-24D2-15	DR2-24D0-13	DR2-28D0-15
1.5	DR1-26D0-03	DR1-26D0-05	DR2-28D0-03	DR2-28D0-05	DR1-26D0-13	DR1-26D0-15	DR2-28D0-13	DR2-28D0-15
2	DR1-26D8-03	DR1-26D8-05	DR2-28D0-03	DR2-28D0-05	DR1-26D8-13	DR1-26D8-15	DR2-28D0-13	DR2-28D0-15
3	DR1-29D6-03	DR1-29D6-05	DR2-2012-03	DR2-2012-05	DR1-29D6-13	DR1-29D6-15	DR2-2012-13	DR2-2012-15
5	DR1-2015-03	DR1-2015-05	DR2-2018-03	DR2-2018-05	DR1-2015-13	DR1-2015-15	DR2-2018-13	DR2-2018-15
7.5	DR1-2022-03	DR1-2022-05	DR2-2025-03	DR2-2025-05	DR1-2022-13	DR1-2022-15	DR2-2025-13	DR2-2025-15
10	DR1-2028-03	DR1-2028-05	DR2-2035-03	DR2-2035-05	DR1-2028-13	DR1-2028-15	DR2-2035-13	DR2-2035-15
15	DR1-2042-03	DR1-2042-05	DR2-2045-03	DR2-2045-05	DR1-2042-13	DR1-2042-15	DR2-2045-13	DR2-2045-15
20	DR1-2054-03	DR1-2054-05	DR2-2055-03	DR2-2055-05	DR1-2054-13	DR1-2054-15	DR2-2055-13	DR2-2055-15
25	DR1-2068-03	DR1-2068-05	DR2-2080-03	DR2-2080-05	DR1-2068-13	DR1-2068-15	DR2-2080-13	DR2-2080-15
30	DR1-2080-03	DR1-2080-05	DR2-2080-03	DR2-2100-05	DR1-2080-13	DR1-2080-15	DR2-2080-13	DR2-2100-15
40	DR1-2104-03	DR1-2104-05	DR2-2100-03	DR2-2100-05	DR1-2104-13	DR1-2104-15	DR2-2100-13	DR2-2100-15
50	DR1-2130-03	DR1-2130-05	DR2-2130-03	DR2-2130-05	DR1-2130-13	DR1-2130-15	DR2-2130-13	DR2-2130-15
60	DR1-2154-03	DR1-2154-05	DR2-2160-03	DR2-2200-15	DR1-2154-13	DR1-2154-15	DR2-2160-13	DR2-2200-15
75	DR1-2192-03	DR1-2192-05	DR2-2200-13	DR2-2200-15	DR1-2192-13	DR1-2192-15	DR2-2200-13	DR2-2200-15
100	DR1-2248-03	DR1-2248-05	DR2-2225-13	DR2-2225-15	DR1-2248-13	DR1-2248-15	DR2-2225-13	DR2-2225-15

Line and Load Reactors—480 V

hp (CT)	Open Line Reactor 3%	Open Line Reactor 5%	Load Reactor 3%	Load Reactor 5%	NEMA 1 Line Reactor 3%	NEMA 1 Line Reactor 5%	NEMA 1 Load Reactor 3%	NEMA 1 Load Reactor 5%
1	DR1-42D1-03	DR1-42D1-05	DR2-42D0-05	DR2-42D0-05	DR1-42D1-13	DR1-42D1-15	DR2-42D0-13	DR2-42D0-15
1.5	DR1-43D0-03	DR1-43D0-05	DR2-44D0-05	DR2-44D0-05	DR1-43D0-13	DR1-43D0-15	DR2-44D0-13	DR2-44D0-15
2	DR1-43D4-03	DR1-43D4-05	DR2-44D0-03	DR2-44D0-05	DR1-43D4-13	DR1-43D4-15	DR2-44D0-13	DR2-44D0-15
3	DR1-44D8-03	DR1-44D8-05	DR2-48D0-03	DR2-48D0-05	DR1-44D8-13	DR1-44D8-15	DR2-48D0-13	DR2-48D0-15
5	DR1-47D6-03	DR1-47D6-05	DR2-48D0-03	DR2-48D0-05	DR1-47D6-13	DR1-47D6-15	DR2-48D0-13	DR2-48D0-15
7.5	DR1-4011-03	DR1-4011-05	DR2-4012-03	DR2-4012-05	DR1-4011-13	DR1-4011-15	DR2-4012-13	DR2-4012-15
10	DR1-4014-03	DR1-4014-05	DR2-4018-03	DR2-4018-05	DR1-4014-13	DR1-4014-15	DR2-4018-13	DR2-4018-15
15	DR1-4021-03	DR1-4021-05	DR2-4025-03	DR2-4025-05	DR1-4021-13	DR1-4021-15	DR2-4025-13	DR2-4025-15
20	DR1-4027-03	DR1-4027-05	DR2-4025-03	DR2-4025-05	DR1-4027-13	DR1-4027-15	DR2-4025-13	DR2-4025-15
25	DR1-4034-03	DR1-4034-05	DR2-4035-03	DR2-4035-05	DR1-4034-13	DR1-4034-15	DR2-4035-13	DR2-4035-15
30	DR1-4040-03	DR1-4040-05	DR2-4045-03	DR2-4045-05	DR1-4040-13	DR1-4040-15	DR2-4045-13	DR2-4045-15
40	DR1-4052-03	DR1-4052-05	DR2-4055-03	DR2-4055-05	DR1-4052-13	DR1-4052-15	DR2-4055-13	DR2-4055-15
50	DR1-4065-03	DR1-4065-05	DR2-4080-03	DR2-4080-05	DR1-4065-13	DR1-4065-15	DR2-4080-13	DR2-4080-15
60	DR1-4077-03	DR1-4077-05	DR2-4100-03	DR2-4080-05	DR1-4077-13	DR1-4077-15	DR2-4100-13	DR2-4080-15
75	DR1-4096-03	DR1-4096-05	DR2-4100-03	DR2-4100-05	DR1-4096-13	DR1-4096-15	DR2-4100-13	DR2-4100-15
100	DR1-4124-03	DR1-4124-05	DR2-4130-03	DR2-4130-05	DR1-4124-13	DR1-4124-15	DR2-4130-13	DR2-4130-15
125	DR1-4156-03	DR1-4156-05	DR2-4160-03	DR2-4160-05	DR1-4156-13	DR1-4156-15	DR2-4160-13	DR2-4160-15
150	DR1-4180-03	DR1-4180-05	DR2-4200-13	DR2-4200-15	DR1-4180-13	DR1-4180-15	DR2-4200-13	DR2-4200-15
200	DR1-4240-03	DR1-4240-05	DR2-4250-13	DR2-4250-15	DR1-4240-13	DR1-4240-15	DR2-4250-13	DR2-4250-15
250	DR1-4302-03	DR1-4302-05	DR2-4320-13	DR2-4320-15	DR1-4302-13	DR1-4302-15	DR2-4320-13	DR2-4320-15
300	DR1-4361-03	DR1-4361-05	DR2-4400-13	DR2-4400-15	DR1-4361-13	DR1-4361-15	DR2-4400-13	DR2-4400-15
350	DR1-4414-03	DR1-4414-05	DR2-4400-13	DR2-4400-15	DR1-4414-13	DR1-4414-15	DR2-4400-13	DR2-4400-15
400	DR1-4477-03	DR1-4477-05	DR2-4500-03	DR2-4500-05	DR1-4477-13	DR1-4477-15	DR2-4500-13	DR2-4500-15
500	DR1-4590-03	DR1-4590-05	DR2-4600-03	DR2-4600-05	DR1-4590-13	DR1-4590-15	DR2-4600-13	DR2-4600-15
600	DR1-4708-03	DR1-4708-05	DR2-4750-03	DR2-4750-05	DR1-4708-13	DR1-4708-15	DR2-4750-13	DR2-4750-15

Line and Load Reactors—575 V

hp (CT)	Open Line Reactor 3%	Open Line Reactor 5%	Load Reactor 3%	Load Reactor 5%	NEMA 1 Line Reactor 3%	NEMA 1 Line Reactor 5%	NEMA 1 Load Reactor 3%	NEMA 1 Load Reactor 5%
2	DR1-52D7-03	DR1-52D7-05	DR2-54D0-03	DR2-54D0-05	DR1-52D7-13	DR1-52D7-15	DR2-54D0-13	DR2-54D0-15
3	DR1-53D9-03	DR1-53D9-05	DR2-54D0-03	DR2-54D0-05	DR1-53D9-13	DR1-53D9-15	DR2-54D0-13	DR2-54D0-15
5	DR1-56D1-03	DR1-56D1-05	DR2-58D0-03	DR2-58D0-05	DR1-56D1-13	DR1-56D1-15	DR2-58D0-13	DR2-58D0-15
7.5	DR1-59D0-03	DR1-59D0-05	DR2-58D0-03	DR2-58D0-05	DR1-59D0-13	DR1-59D0-15	DR2-58D0-13	DR2-58D0-15
10	DR1-5011-03	DR1-5011-05	DR2-5012-03	DR2-5012-05	DR1-5011-13	DR1-5011-15	DR2-5012-13	DR2-5012-15
15	DR1-5017-03	DR1-5017-05	DR2-5018-03	DR2-5018-05	DR1-5017-13	DR1-5017-15	DR2-5018-13	DR2-5018-15
20	DR1-5022-03	DR1-5022-05	DR2-5025-03	DR2-5025-05	DR1-5022-13	DR1-5022-15	DR2-5025-13	DR2-5025-15
25	DR1-5027-03	DR1-5027-05	DR2-5025-03	DR2-5025-05	DR1-5027-13	DR1-5027-15	DR2-5025-13	DR2-5025-15
30	DR1-5032-03	DR1-5032-05	DR2-5035-03	DR2-5035-05	DR1-5032-13	DR1-5032-15	DR2-5035-13	DR2-5035-15
40	DR1-5041-03	DR1-5041-05	DR2-5045-03	DR2-5045-05	DR1-5041-13	DR1-5041-15	DR2-5045-13	DR2-5045-15
50	DR1-5052-03	DR1-5052-05	DR2-5055-03	DR2-5055-05	DR1-5052-13	DR1-5052-15	DR2-5055-13	DR2-5055-15
60	DR1-5062-03	DR1-5062-05	DR2-5080-03	DR2-5080-05	DR1-5062-13	DR1-5062-15	DR2-5080-13	DR2-5080-15
75	DR1-5077-03	DR1-5077-05	DR2-5080-03	DR2-5080-05	DR1-5077-13	DR1-5077-15	DR2-5080-13	DR2-5080-15
100	DR1-5100-03	DR1-5100-05	DR2-5100-03	DR2-5100-05	DR1-5100-13	DR1-5100-15	DR2-5100-13	DR2-5100-15
125	DR1-5125-03	DR1-5125-05	DR2-5130-03	DR2-5130-05	DR1-5125-13	DR1-5125-15	DR2-5130-13	DR2-5130-15
150	DR1-5144-03	DR1-5144-05	DR2-5160-03	DR2-5160-05	DR1-5144-13	DR1-5144-15	DR2-5160-13	DR2-5160-15
200	DR1-5192-03	DR1-5192-05	DR2-5200-13	DR2-5200-15	DR1-5192-13	DR1-5192-15	DR2-5200-13	DR2-5200-15
250	DR1-5242-03	DR1-5242-05	DR2-5250-13	DR2-5250-15	DR1-5242-13	DR1-5242-15	DR2-5250-13	DR2-5250-15
300	DR1-5289-03	DR1-5289-05	DR2-5320-13	DR2-5320-15	DR1-5289-13	DR1-5289-15	DR2-5320-13	DR2-5320-15
400	DR1-5382-03	DR1-5382-05	DR2-5400-13	DR2-5400-15	DR1-5382-13	DR1-5382-15	DR2-5400-13	DR2-5400-15
450	DR1-5412-03	DR1-5412-05	DR2-5400-13	DR2-5400-15	DR1-5412-13	DR1-5412-15	DR2-5400-13	DR2-5400-15
500	DR1-5472-03	DR1-5472-05	DR2-5500-03	DR2-5500-05	DR1-5472-13	DR1-5472-15	DR2-5500-13	DR2-5500-15
600	DR1-5576-03	DR1-5576-05	DR2-5600-03	DR2-5600-05	DR1-5576-13	DR1-5576-15	DR2-5600-13	DR2-5600-15

Replacement Parts

FR4 Spare Parts

Category	Description	Quantity/ Drive	230 V Catalog Number	480 V Catalog Number	575 V Catalog Number
Control fan	NEMA Type 12 control fan ①	1	PP01086	PP01086	—
Control module ②	SVX control module	1	CSBS0000000000	CSBS0000000000	—
	Standard slot A I/O card	1	OPTA9	OPTA9	—
	Standard slot B I/O card	1	OPTA2	OPTA2	—
Keypad ②	SVX/SPX keypad	1	KEYPAD-LOC/REM	KEYPAD-LOC/REM	—
Main fan ②	DC fan (main)	1	PP01060	PP01060	—
Other	Mounting kit, fixing kit	1	FR00040	FR00040	—
	Mounting kit, fixing kit, N12 ①	1	FR00079	FR00079	—
	Control cover, plastic, N1	1	FR00006	FR00006	—

FR5 Spare Parts

Category	Description	Quantity/ Drive	230 V Catalog Number	480 V Catalog Number	575 V Catalog Number
Control fan	NEMA Type 12 control fan ①	1	PP01088	PP01088	—
Control module ②	SVX control module	1	CSBS0000000000	CSBS0000000000	—
	Standard slot A I/O card	1	OPTA9	OPTA9	—
	Standard slot B I/O card	1	OPTA2	OPTA2	—
Keypad ②	SVX/SPX keypad	1	KEYPAD-LOC/REM	KEYPAD-LOC/REM	—
Main fan ②	DC fan (main)	1	PP01061	PP01061	—
Other	Mounting kit, fixing kit	1	FR00050	FR00050	—
	Mounting kit, fixing kit, N12 ①	1	FR00081	FR00081	—

FR6 Spare Parts

Category	Description	Quantity/ Drive	230 V Catalog Number	480 V Catalog Number	575 V Catalog Number
Control fan	NEMA Type 12 control fan ①	1	PP01049	PP01049	—
Control module ②	SVX control module	1	CSBS0000000000	CSBS0000000000	CSBS0000000000
	Standard slot A I/O card	1	OPTA9	OPTA9	OPTA9
	Standard slot B I/O card	1	OPTA2	OPTA2	OPTA2
Keypad ②	SVX/SPX keypad	1	KEYPAD-LOC/REM	KEYPAD-LOC/REM	KEYPAD-LOC/REM
Main fan ②	DC fan (main)	1	PP01062	PP01062	—
Other	Mounting kit, fixing kit	1	FR00060	FR00060	FR00060
	Mounting kit, fixing kit, N12 ①	1	FR00082	FR00082	FR00082
	Control cover, plastic, N1	1	FR06011	FR06011	FR06011

FR7 Spare Parts

Category	Description	Quantity/ Drive	230 V Catalog Number	480 V Catalog Number	575 V Catalog Number
Control fan	NEMA Type 12 control fan ①	1	PP01049	PP01049	PP01049
Control module ②	SVX control module	1	CSBS0000000000	CSBS0000000000	CSBS0000000000
	Standard slot A I/O card	1	OPTA9	OPTA9	OPTA9
	Standard slot B I/O card	1	OPTA2	OPTA2	OPTA2
Keypad ②	SVX/SPX keypad	1	KEYPAD-LOC/REM	KEYPAD-LOC/REM	KEYPAD-LOC/REM
Main fan ②	DC fan (main)	1	PP01063	PP01063	PP01063
Other	Mounting kit, fixing kit	1	FR07071	FR07071	FR07071
	Mounting kit, fixing kit, N12 ①	1	FR07072	FR07072	FR07072
	Control cover, plastic, N1	1	FR07011	FR07011	FR07011

Notes

① Only for NEMA Type 12/IP54 Type drives.
② Factory recommended spare parts.

FR8 Spare Parts

Category	Description	Quantity/ Drive	230 V Catalog Number	480 V Catalog Number	575 V Catalog Number
Control fan	NEMA Type 12 control fan ①	1	CP01180	CP01180	CP01180
Control module ②	SVX control module	1	CSBS0000000000	CSBS0000000000	CSBS0000000000
	Standard slot A I/O card	1	OPTA9	OPTA9	OPTA9
	Standard slot B I/O card	1	OPTA2	OPTA2	OPTA2
Keypad ②	SVX/SPX keypad	1	KEYPAD-LOC/REM	KEYPAD-LOC/REM	KEYPAD-LOC/REM
Main AC fan	Fan AC	1	PP01123	PP01123	PP01123
	Fan fuse	2	PP20202	PP20202	PP20202
	Starting cap	1	S00734	S00734	S00734
	Fan driver board AC	1	VB00599	VB00799	VB00799
	Isolation transformer (fan)	1	S0000113	S0000113	S0000113
Main DC fan ②	DC fan	1	PP00071	PP00071	PP00071
	DC power supply	1	S01016	S01016	S01016
Other	Front cover, N12 ①	1	FR08079	FR08079	FR08079
	Conduit plate, N12	1	FR08082	FR08082	FR08082

FR9 Spare Parts

Category	Description	Quantity/ Drive	230 V Catalog Number	480 V Catalog Number	575 V Catalog Number
Control fan	50 mm fan	1	PP09041	PP09041	PP09041
	80 mm fan	1	PP01068	PP01068	PP01068
Control module ①	SVX control module	1	CSBS0000000000	CSBS0000000000	CSBS0000000000
	Standard slot A I/O card	1	OPTA9	OPTA9	OPTA9
	Standard slot B I/O card	1	OPTA2	OPTA2	OPTA2
Converter	Power module ②	1	FR09-0261-2-ANV	FR09-0261-4-ANV	FR09-0125-5-ANV
		1	FR09-0300-2-ANV	FR09-0300-4-ANV	FR09-0144-5-ANV
		1	—	—	FR09-0170-5-ANV
	Driver board	1	S00583	S00583	S00583
	Shunt board ②	6	—	VB00535	VB00537
		6	—	VB00536	VB00542
		6	—	—	VB00543
DC section	Balancing resistor	3	PP00052	PP00052	PP00052
	Bus capacitor	8	S00335	S00335	PP01041
	DC busbars DC–	1	FR09043	FR09043	FR09043
	DC busbars DC+	1	FR09044	FR09044	FR09044
	DC busbars connection	1	FR09045	FR09045	FR09045
	DC busbars +/– insulator	1	FR09046	FR09046	FR09046
	DC busbars –/con insulator	1	FR09047	FR09047	FR09047
Inverter	Rectifier module	1	FR09826	FR09822	FR09823
	Diode	3	CP01268	CP01268	CP01268
	Rectifier board	1	—	VB00459	VB00460
Keypad ①	SVX/SPX keypad	1	KEYPAD-LOC/REM	KEYPAD-LOC/REM	KEYPAD-LOC/REM
Main DC fan ①	DC fan	1	PP00072	PP00072	PP00072
	DC power supply	1	S01017	S01017	S01017
Other	Front cover power	1	FR09012	FR09012	FR09012
	Front cover connection	1	FR09013	FR09013	FR09013
	Front power conduit	1	FR09014	FR09014	FR09014

Notes

① Factory recommended spare parts.

② Select one part number based on the amperage rating of the drive. Please contact EatonCare at 877-ETN-CARE for assistance.

FR10 Spare Parts

Category	Description	Quantity/ Drive	230 V Catalog Number	480 V Catalog Number	575 V Catalog Number
Control	Fiber board	1	—	**S00451**	**S00451**
	ASIC board	1	—	**S00457**	**S00457**
Control fan	ASIC fan	1	—	**PP01096**	**PP01096**
Control module ①	SVX control module	1	—	**CPBS0000000000**	**CPBS0000000000**
	Standard slot A I/O card	1	—	**OPTA9**	**OPTA9**
	Standard slot B I/O card	1	—	**OPTA2**	**OPTA2**
Converter	Power module ②	1	—	**FR10-0385-4-ANV**	**FR10-0261-5-ANV**
		1	—	**FR10-0460-4-ANV**	**FR10-0325-5-ANV**
		1	—	**FR10-0520-4-ANV**	**FR10-0385-5-ANV**
		1	—	**—**	**FR10-0416-5-ANV**
	Driver board	1	—	**S00450**	**S00450**
	Driver adapter board	1	—	**VB00330**	**VB00330**
	Shunt board ②	6	—	**VB00497**	**VB00510**
		6	—	**VB00498**	**VB00511**
		6	—	**VB00537**	**VB00545**
Covers	Top cover	1	—	**FR10340**	**FR10340**
	Side cover	2	—	**FR10341**	**FR10341**
DC section	Balancing resistor	2	—	**PP13027**	**PP13028**
	DC busbars kit (right)	1	—	**S0000005**	**S0000005**
	Bus capacitor	12	—	**S00335**	**S00336**
Inverter	Rectifier module	1	—	**FR10823**	**FR10823**
	Charging resistor	1	—	**PP00066**	**PP00066**
	Diode	3	—	**PP01177**	**PP01177**
	Rectifier board	1	—	**S00591**	**S00592**
Keypad ①	SVX/SPX keypad	1	—	**KEYPAD-LOC/REM**	**KEYPAD-LOC/REM**
Main DC fan ①	DC fan	2	—	**PP00072**	**PP00072**
	DC power supply	2	—	**S01017**	**S01017**

Notes

① Factory recommended spare parts.

② Select one part number based on the amperage rating of the drive. Please contact EatonCare at 877-ETN-CARE for assistance.

FR11 Spare Parts

Category	Description	Quantity/ Drive	230 V Catalog Number	480 V Catalog Number	575 V Catalog Number
Control	Fiber board	1	—	**S00451**	**S00451**
	ASIC board	1	—	**S00457**	**S00457**
Control fan	ASIC fan	1	—	**PP01096**	**PP01096**
Control module ①	SVX control module	1	—	**CPBS0000000000**	**CPBS0000000000**
	Standard slot A I/O card	1	—	**OPTA9**	**OPTA9**
	Standard slot B I/O card	1	—	**OPTA2**	**OPTA2**
Converter	Power module ②	1	—	**FR11-0590-4-ANV**	**FR11-0460-5-ANV**
		1	—	**FR11-0650-4-ANV**	**FR11-0502-5-ANV**
		1	—	**FR11-0730-4-ANV**	**FR11-0590-5-ANV**
	Driver board	1	—	**S00452**	**S00452**
	Driver adapter board	1	—	**VB00330**	**VB00330**
	Shunt board ②	9	—	**VB00513**	**VB00512**
		9	—	**VB00514**	**VB00546**
		9	—	**VB00538**	**VB00547**
Covers	Top cover	1	—	**FR11345**	**FR11345**
DC section	Balancing resistor	3	—	**PP13027**	**PP13027**
	DC busbars kit (right)	3	—	**S0000005**	**S0000005**
	Bus capacitor	18	—	**S00335**	**S00335**
Inverter	Rectifier module	1	—	**FR10823**	**FR10823**
	Diode	3	—	**PP01177**	**PP01177**
	Rectifier board	1	—	**S00591**	**S00591**
Keypad ①	SVX/SPX keypad	1	—	**KEYPAD-LOC/REM**	**KEYPAD-LOC/REM**
Main DC fan ①	DC fan	2	—	**PP00072**	**PP00072**
	DC power supply	2	—	**S01017**	**S01017**

Notes

① Factory recommended spare parts.

② Select one part number based on the amperage rating of the drive. Please contact EatonCare at 877-ETN-CARE for assistance.

FR12 Spare Parts

Category	Description	Quantity/ Drive	230 V Catalog Number	480 V Catalog Number	575 V Catalog Number
Control	Fiber board	2	—	**S00451**	**S00451**
	ASIC board	2	—	**S00457**	**S00457**
	Star coupler	1	—	**S00593**	**S00593**
Control fan	ASIC fan	2	—	**PP01096**	**PP01096**
Control module ①	SVX control module	1	—	**CPBS0000000000**	**CPBS0000000000**
	Standard slot A I/O card	1	—	**OPTA9**	**OPTA9**
	Standard slot B I/O card	1	—	**OPTA2**	**OPTA2**
Converter	Power module ②	1	—	**FR12-0820-4-ANV**	**FR12-0650-5-ANV**
		1	—	**FR12-0920-4-ANV**	**FR12-0750-5-ANV**
		1	—	**FR12-1030-4-ANV**	**FR12-0820-5-ANV**
	Driver board	2	—	**S00450**	**S00450**
	Driver adapter board	2	—	**VB00330**	**VB00330**
	Shunt board	12	—	**VB00498**	**VB00511**
Covers	Top cover	2	—	**FR10340**	**FR10340**
	Side cover	4	—	**FR10341**	**FR10341**
DC section	Balancing resistor	4	—	**PP13027**	**PP13027**
	DC busbars kit (right)	2	—	**S0000005**	**S0000005**
	Bus capacitor	24	—	**S00335**	**S00336**
Inverter	Rectifier module	2	—	**FR10823**	**FR10823**
	Diode	3	—	**PP01177**	**PP01177**
	Rectifier board	2	—	**S00591**	**S00591**
Keypad ①	SVX/SPX keypad	1	—	**KEYPAD-LOC/REM**	**KEYPAD-LOC/REM**
Main DC fan ①	DC fan	4	—	**PP00072**	**PP00072**
	DC power supply	4	—	**S01017**	**S01017**

Notes

① Factory recommended spare parts.

② Select one part number based on the amperage rating of the drive. Please contact EatonCare at 877-ETN-CARE for assistance.

FR13 Spare Parts

Category	Description	Quantity/ Drive	230 V Catalog Number	480 V Catalog Number	575 V Catalog Number
Control	ASIC board	1	—	**S00457**	**S00457**
	ASIC assembly	1	—	**60S01030**	**60S01030**
Control fan	ASIC fan	1	—	**PP01096**	**PP01096**
Control module ①	SVX control module	1	—	**CPBS0000000000**	**CPBS0000000000**
	Standard slot A I/O card	1	—	**OPTA9**	**OPTA9**
	Standard slot B I/O card	1	—	**OPTA2**	**OPTA2**
Converter	Power module ②	3	—	**FI13-1150-4-ANV**	**FR13-1030-5-ANV**
		3	—	**FI13-1300-4-ANV**	**FR13-1180-5-ANV**
		3	—	**FI13-1450-4-ANV**	**FR13-920-5-ANV**
	Driver board	3	—	**S00454**	**S00454**
	Driver adapter board	2	—	**VB00330**	**VB00330**
	Shunt board ②	18	—	**VB00505**	**VB00516**
		18	—	**VB00514**	**VB00517**
		18	—	**VB00541**	**VB00547**
Covers	Top cover	3	—	**FI10001**	**FI10001**
	Side cover	3	—	**FI10003**	**FI10003**
DC section	Balancing resistor	6	—	**PP13034**	**PP13034**
	Bus capacitor	36	—	**S00335**	**S00336**
	DC busbars kit	3	—	**FI13329**	**FI13329**
Inverter	Rectifier module	2	—	**FR10823**	**FR10823**
	Diode	3	—	**PP01177**	**PP01177**
	Rectifier board	2	—	**S00591**	**S00591**
Keypad ①	SVX/SPX keypad	1	—	**KEYPAD-LOC/REM**	**KEYPAD-LOC/REM**
Main DC fan ①	DC fan	4	—	**PP00072**	**PP00072**
	DC power supply	4	—	**S01017**	**S01017**

Notes

① Factory recommended spare parts.

② Select one part number based on the amperage rating of the drive. Please contact EatonCare at 877-ETN-CARE for assistance.

FR14 Spare Parts

Category	Description	Quantity/ Drive	230 V Catalog Number	480 V Catalog Number	575 V Catalog Number
Control	ASIC board	2	—	**S00457**	**S00457**
	Star coupler	1	—	**S00593**	**S00593**
	ASIC assembly	2	—	**60S01030**	**60S01030**
	Star coupler kit	1	—	**FR10860**	**FR10860**
Control fan	ASIC fan	2	—	**PP01096**	**PP01096**
Control module ①	SVX control module	1	—	**CPBS0000000000**	**CPBS0000000000**
	Standard slot A I/O card	1	—	**OPTA9**	**OPTA9**
	Standard slot B I/O card	1	—	**OPTA2**	**OPTA2**
Converter	Power module ②	1	—	**FR14-1770-4-ANV**	**FR14-1500-5-ANV**
		1	—	**FR14-2150-4-ANV**	**FR14-1900-5-ANV**
		1	—	**FR14-2700-4-ANV**	**FR14-2250-5-ANV**
	Driver board	6	—	**S00454**	**S00454**
	Driver adapter board	2	—	**VB00330**	**VB00330**
	Shunt board ②	36	—	**VB00541**	**VB00516**
		36	—	—	**VB00517**
Covers	Top cover	6	—	**FI10001**	**FI10001**
	Side cover	6	—	**FI10003**	**FI10003**
DC section	Balancing resistor	6	—	**PP13034**	**PP13034**
	Bus capacitor	72	—	**S00335**	**S00336**
	DC busbars kit	6	—	**FI13329**	**FI13329**
Inverter	Rectifier module	2	—	**FR10823**	**FR10823**
	Diode	3	—	**PP01177**	**PP01177**
	Rectifier board	2	—	**S00591**	**S00591**
Keypad ①	SVX/SPX keypad	1	—	**KEYPAD-LOC/REM**	**KEYPAD-LOC/REM**
Main DC fan ①	DC fan	6	—	**PP00072**	**PP00072**
	DC power supply	6	—	**S01017**	**S01017**

Notes

① Factory recommended spare parts.

② Select one part number based on the amperage rating of the drive. Please contact EatonCare at 877-ETN-CARE for assistance.

Technical Data and Specifications

SVX Drives

Description	Specification
Input Ratings	
Input voltage (V_{in})	+10%/–15%
Input frequency (f_{in})	50/60 Hz (variation up to 45–66 Hz)
Connection to power	Once per minute or less (typical operation)
High withstand rating	100 kAIC
Output Ratings	
Output voltage	0 to V_{in}
Continuous output current	I_H rated 100% at 122 °F (50 °C), FR9 and below I_L rated 100% at 104 °F (40 °C), FR9 and below I_H/I_L 100% at 104 °F (40 °C), FR10 and above
Overload current (I_H/I_L)	150% I_H, 110% I_L for 1 min.
Output frequency	0 to 320 Hz
Frequency resolution	0.01 Hz
Initial output current (I_H)	250% for 2 seconds
Efficiency	>96%
Control Characteristics	
Control method	Frequency control (V/f) Open loop: Sensorless vector control Closed loop: SPX drives only
Switching frequency Frame 4–6 Frame 7–12	Adjustable with parameter 2.6.9 1–16 kHz; default 10 kHz 1–10 kHz; default 3.6 kHz
Frequency reference	Analog input: Resolution 0.1% (10-bit), accuracy ±1% V/Hz Panel reference: Resolution 0.01 Hz
Field weakening point	30–320 Hz
Acceleration time	0–3000 sec.
Deceleration time	0–3000 sec.
Braking torque	DC brake: 30% x T_n (without brake option)
Ambient Conditions	
Ambient operating temperature	14 °F (–10 °C), no frost to 122 °F (50 °C) I_H (FR4–FR9) 14 °F (–10 °C), no frost to 104 °F (40 °C) I_H (FR10 and up) 14 °F (–10 °C), no frost to 104 °F (40 °C) I_L (all frames)
Storage temperature	–40° to 158 °F (–40° to 70 °C)
Relative humidity	0 to 95% RH, noncondensing, non-corrosive, no dripping water
Air quality	Chemical vapors: IEC 721-3-3, unit in operation, class 3C2; Mechanical particles: IEC 721-3-3, unit in operation, class 3S2
Altitude	100% load capacity (no derating) up to 3280 ft (1000 m); 1% derating for each 328 ft (100 m) above 3280 ft (1000 m); max. 9842 ft (3000 m)
Vibration	EN 50178, EN 60068-2-6; 5 to 50 Hz, displacement amplitude 1 mm (peak) at 3 to 15.8 Hz, max. acceleration amplitude 1G at 15.8 to 150 Hz
Shock	EN 50178, EN 60068-2-27 UPS Drop test (for applicable UPS weights) Storage and shipping: max. 15 g, 11 ms (in package)
Enclosure class	NEMA 1/IP21 or NEMA 12/IP54, open chassis/IP20

Description	Specification
Control Connections	
Analog input voltage	0 to 10 V, R = 200 kohms (–10 to 10 V joystick control) resolution 0.1%; accuracy ±1%
Analog input current	0(4) to 20 mA; R_i—250 ohms differential
Digital inputs (6)	Positive or negative logic; 18 to 30 Vdc
Auxiliary voltage	+24 V ±15%, max. 250 mA
Output reference voltage	+10 V +3%, max. load 10 mA
Analog output	0(4) to 20 mA; R_L max. 500 ohms; resolution 10 bit; accuracy ±2%
Digital outputs	Open collector output, 50 mA/48V
Relay outputs	Two programmable Form C relay outputs switching capacity: 24 Vdc/8 A, 250 Vac/8 A, 125 Vdc/0.4 A
Protections	
Overcurrent protection	Trip limit 4.0 x I_H instantaneously
Overvoltage protection	Yes
Undervoltage protection	Yes
Earth fault protection	In case of earth fault in motor or motor cable, only the frequency converter is protected
Input phase supervision	Trips if any of the input phases are missing
Motor phase supervision	Trips if any of the output phases are missing
Overtemperature protection	Yes
Motor overload protection	Yes
Motor stall protection	Yes
Motor underload protection	Yes
Short-circuit protection	Yes (+24 V and +10 V reference voltages)

Standard I/O Specifications

Description	Specification
Six–digital input programmable	24 V: "0" ≤10 V, "1" ≥18V,R_i >5 kohms
Two–analog input configurable w/jumpers	Voltage: 0–±10 V, R_i >200 kohms Current: 0 (4)–20 mA, R_i = 250 ohms
Two–digital output programmable	Form C relays 250 Vac 30 Vdc 2 amp resistive
One–analog output programmable configurable w/jumper	0–20 mA, R_L max. 500 ohms 10 bits ±2%
One digital output programmable	Open collector 48 Vdc 50 mA

Dimensions

Approximate Dimensions in Inches (mm)

9000X Open Drives

NEMA Type 1/IP21 and NEMA Type 12/IP54, FR4, FR5 and FR6

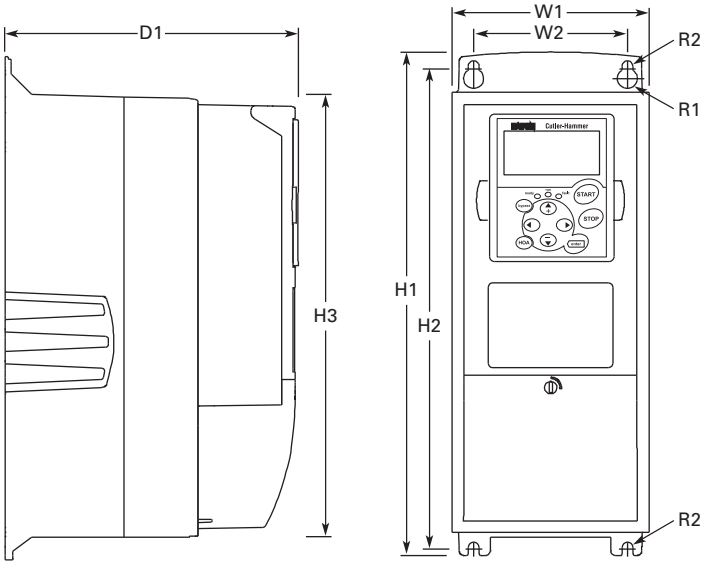

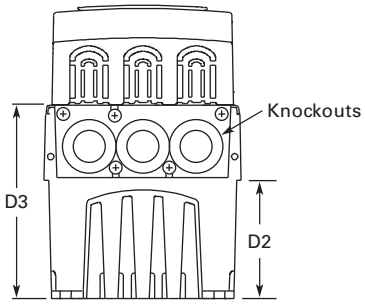

Voltage	hp (I_H)	H1	H2	H3	D1	D2	D3	W1	W2	R1 Dia.	R2 Dia.	Weight Lbs (kg)	Knockouts at Inches (mm) N1 (O.D.)
FR4													
230 V	3/4–3	12.9 (327)	12.3 (313)	11.5 (292)	7.5 (190)	3.0 (77)	4.9 (126)	5.0 (128)	3.9 (100)	0.5 (13)	0.3 (7)	11.0 (5)	3 @ 1.1 (28)
480 V	1–5												
FR5													
230 V	5–7-1/2	16.5 (419)	16.0 (406)	15.3 (389)	8.4 (214)	3.9 (100)	5.8 (148)	5.6 (143)	3.9 (100)	0.5 (13)	0.3 (7)	17.9 (8)	2 @ 1.5 (37) 1 @ 1.1 (28)
480 V	7-1/2–15												
FR6													
230 V	10–15	22.0 (558)	21.3 (541)	20.4 (519)	9.3 (237)	4.2 (105)	6.5 (165)	7.6 (195)	5.8 (148)	0.6 (15.5)	0.4 (9)	40.8 (19)	3 @ 1.5 (37)
480 V	20–30												
575 V	2–25												

Approximate Dimensions in Inches (mm)

NEMA Type 1/IP21 and NEMA Type 12/IP54 with Flange Kit, FR4, FR5 and FR6

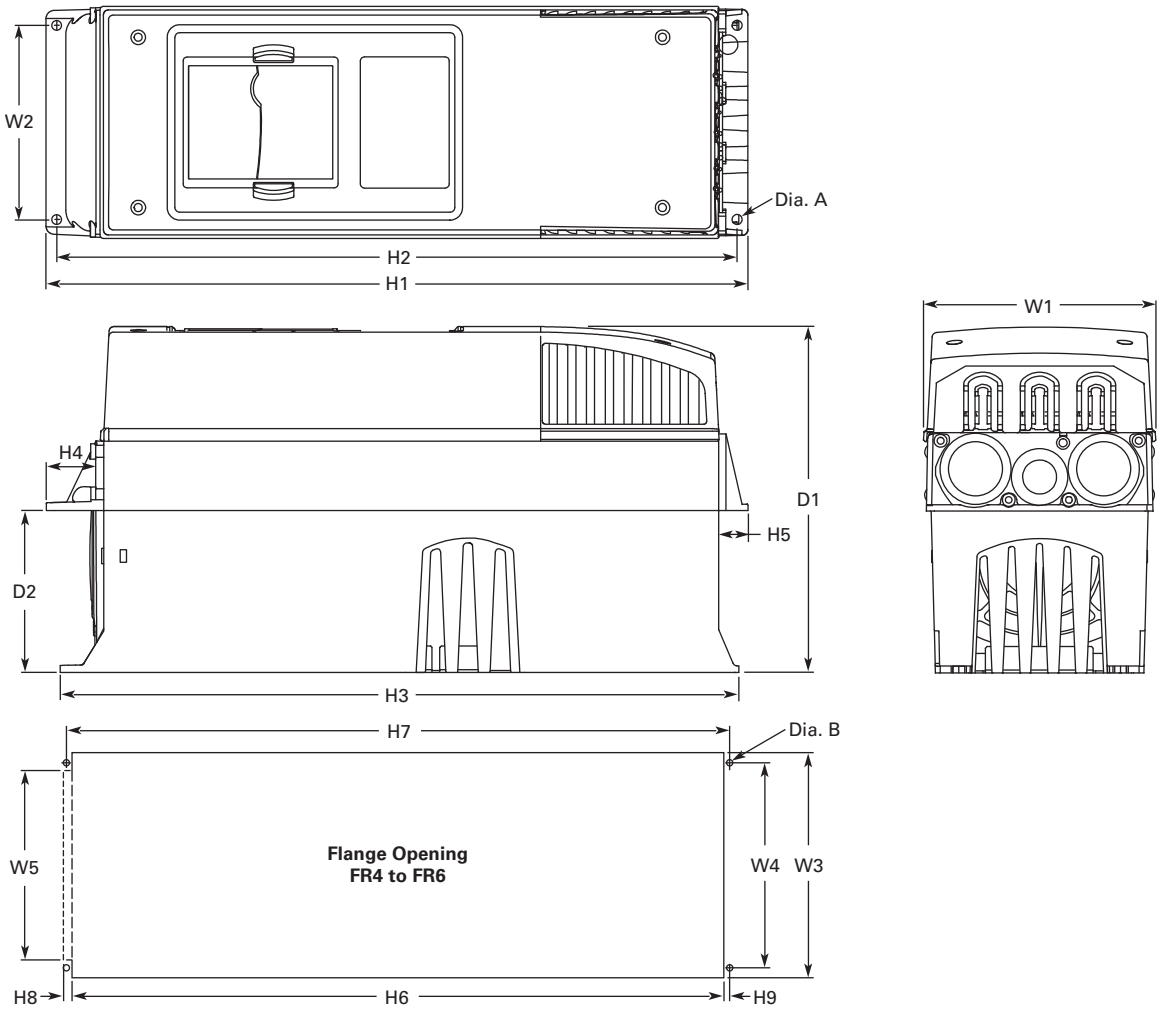

FR4, FR5 and FR6 with Flange Kit

W1	W2	H1	H2	H3	H4	H5	D1	D2	Dia. A
FR4									
5.0 (128)	4.5 (113)	13.3 (337)	12.8 (325)	12.9 (327)	1.2 (30)	0.9 (22)	7.5 (190)	3.0 (77)	0.3 (7)
FR5									
5.6 (143)	4.7 (120)	17.0 (434)	16.5 (420)	16.5 (419)	1.4 (36)	0.7 (18)	8.4 (214)	3.9 (100)	0.3 (7)
FR6									
7.7 (195)	6.7 (170)	22.0 (560)	21.6 (549)	22.0 (558)	1.2 (30)	0.8 (20)	9.3 (237)	4.2 (106)	0.3 (7)

Flange Opening, FR4 to FR6

W3	W4	W5	H6	H7	H8	H9	Dia. B
FR4							
4.8 (123)	4.5 (113)	—	12.4 (315)	12.8 (325)	—	0.2 (5)	0.3 (7)
FR5							
5.3 (135)	4.7 (120)	—	16.2 (410)	16.5 (420)	—	0.2 (5)	0.3 (7)
FR6							
7.3 (185)	6.7 (170)	6.2 (157)	21.2 (539)	21.6 (549)	0.3 (7)	0.2 (5)	0.3 (7)

Approximate Dimensions in Inches (mm)

NEMA Type 1/IP21 and NEMA Type 12/IP54, FR7

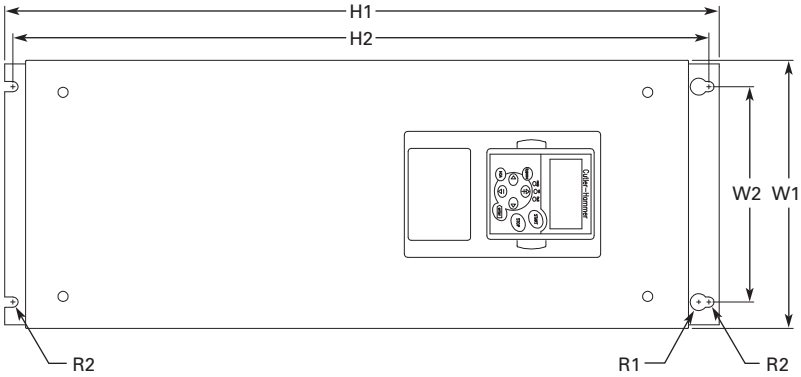

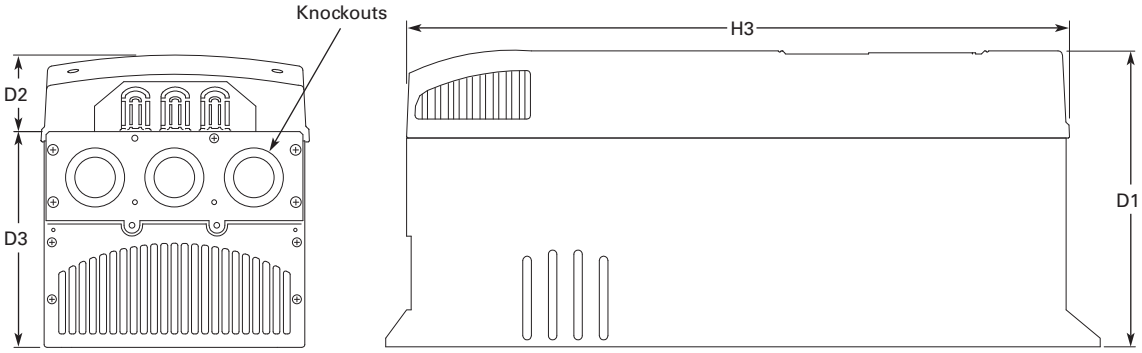

Voltage	hp (I_H)	H1	H2	H3	D1	D2	D3	W1	W2	R1 Dia.	R2 Dia.	Weight Lbs (kg)	Knockouts at Inches (mm) N1 (O.D.)
230 V	20–30	24.8 (630)	24.2 (614)	23.2 (590)	10.1 (257)	3.0 (77)	7.3 (184)	9.3 (237)	7.5 (190)	0.7 (18)	0.4 (9)	77.2 (35)	3 at 1.5 (37)
480 V	40–60												
575 V	30–40												

Approximate Dimensions in Inches (mm)

NEMA Type 1/IP21 and NEMA Type 12/IP54, FR8

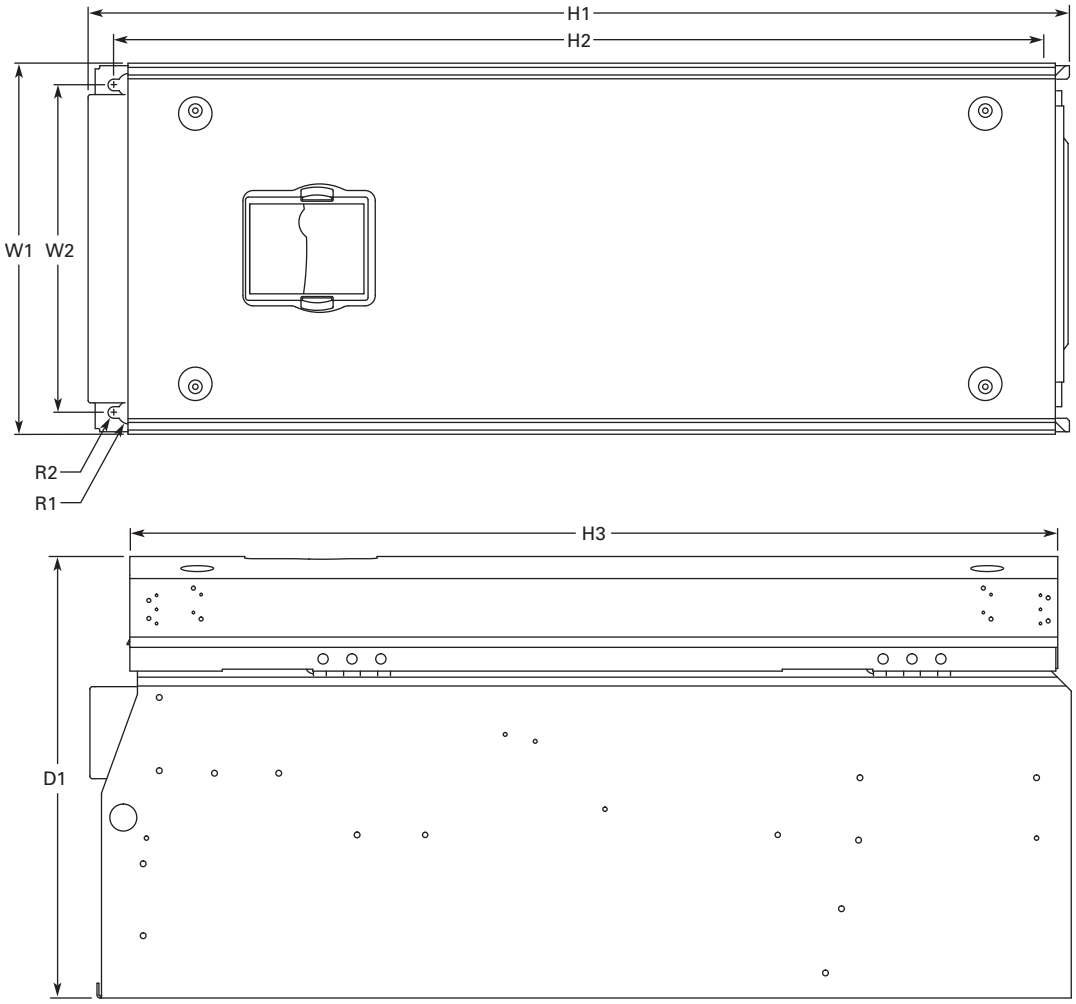

Voltage	hp (I_H)	D1	H1	H2	H3	W1	W2	R1 Dia.	R2 Dia.	Weight Lbs (kg)
230 V	40–60	13.5 (344)	30.1 (764)	28.8 (732)	28.4 (721)	11.5 (291)	10 (255)	0.7 (18)	0.4 (9)	127 (58)
480 V	75–125									
575 V	50–75									

Approximate Dimensions in Inches (mm)

NEMA Type 1/IP21 and NEMA Type 12/IP54, with Flange Kit, FR7 and FR8

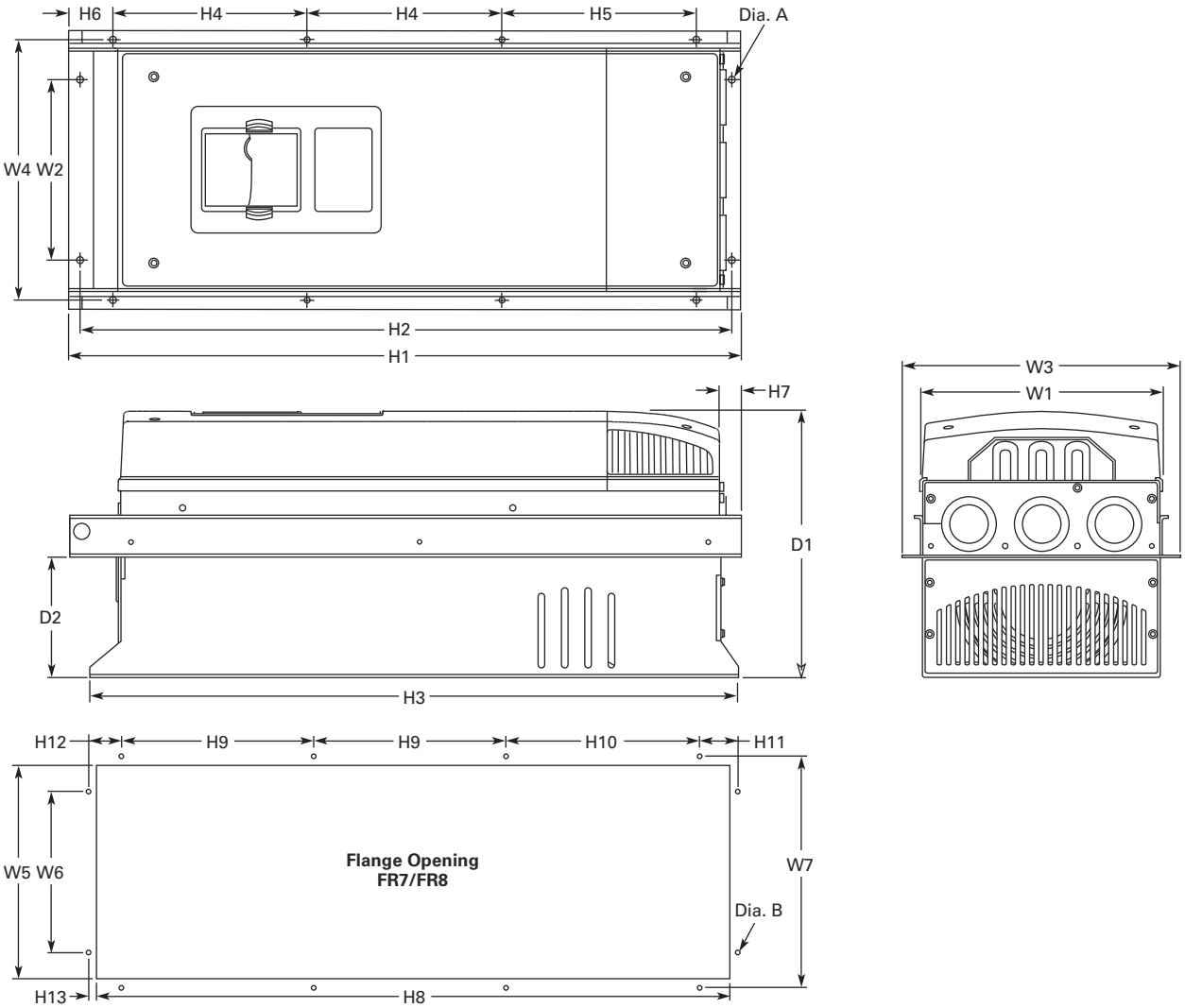

W1	W2	W3	W4	H1	H2	H3	H4	H5	H6	H7	D1	D2	Dia. A
FR7													
9.3 (237)	6.8 (175)	10.6 (270)	10.0 (253)	24.9 (652)	24.8 (632)	24.8 (630)	7.4 (189)	7.4 (189)	0.9 (23)	0.8 (20)	10.1 (257)	4.6 (117)	0.3 (6)
FR8													
11.2 (285)	—	14.0 (355)	13.0 (330)	32.8 (832)	—	29.3 (745)	10.2 (258)	10.4 (265)	1.7 (43)	2.2 (57)	13.5 (344)	4.3 (110)	0.4 (9)

Flange Opening, FR7 and FR8

W5	W6	W7	H8	H9	H10	H11	H12	H13	Dia. B
FR7									
9.2 (233)	6.9 (175)	10.0 (253)	24.4 (619)	7.4 (189)	7.4 (189)	1.4 (35)	1.3 (32)	1.0 (25)	0.3 (6)
FR8									
11.9 (301)	—	13.0 (330)	31.9 (810)	10.2 (258)	10.4 (265)	—	—	1.3 (33)	0.4 (9)

Approximate Dimensions in Inches (mm)

NEMA Type 1/IP21 and NEMA Type 12/IP54 FR9

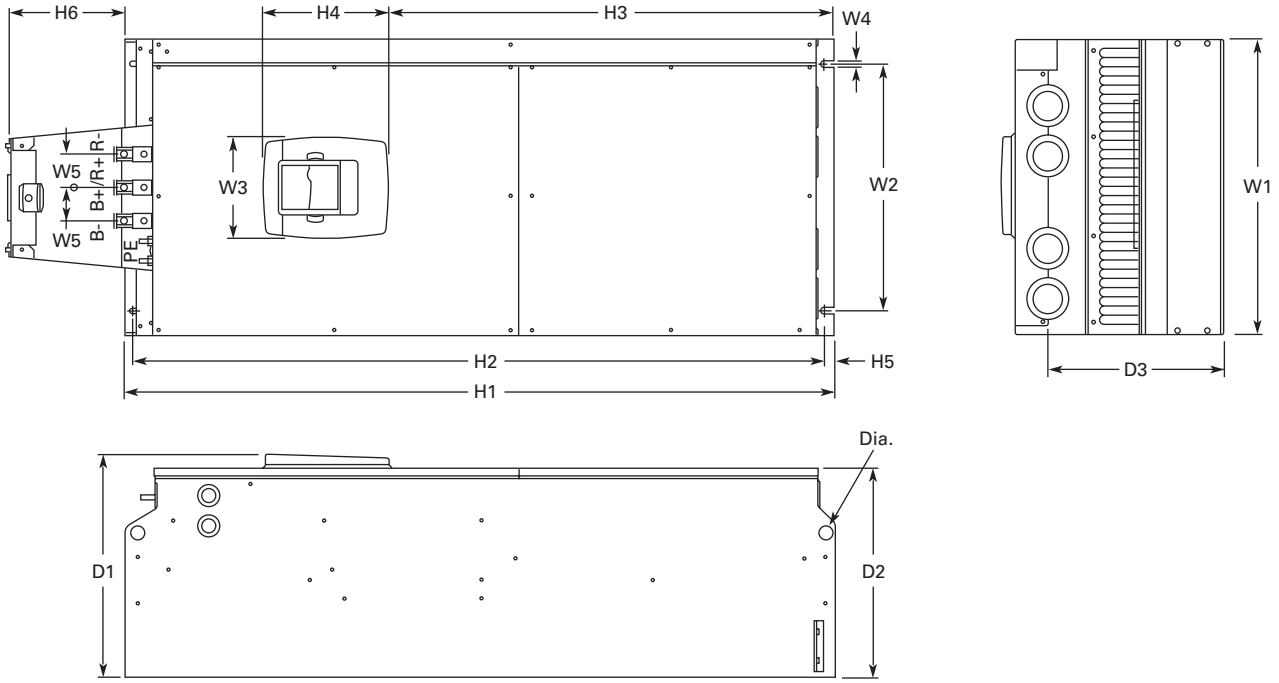

Voltage	hp (I_H)	W1	W2	W3	W4	H1	H2	H3	H4 ①	D1	D2	D3	Dia.	Weight Lbs (kg)
230 V	75–100	18.9 (480)	15.7 (400)	0.4 (9)	2.1 (54)	45.3 (1150)	44.1 (1120)	0.6 (16)	7.4 (188)	14.2 (361.5)	13.4 (340)	11.2 (285)	0.8 (21)	321.9 (146)
480 V	150–200													
575 V	100–175													

Note

① Brake resistor terminal box (H6) included when brake chopper ordered.

Approximate Dimensions in Inches (mm)

NEMA Type 1/IP21 and NEMA Type 12/IP54, FR9 with Flange Kit

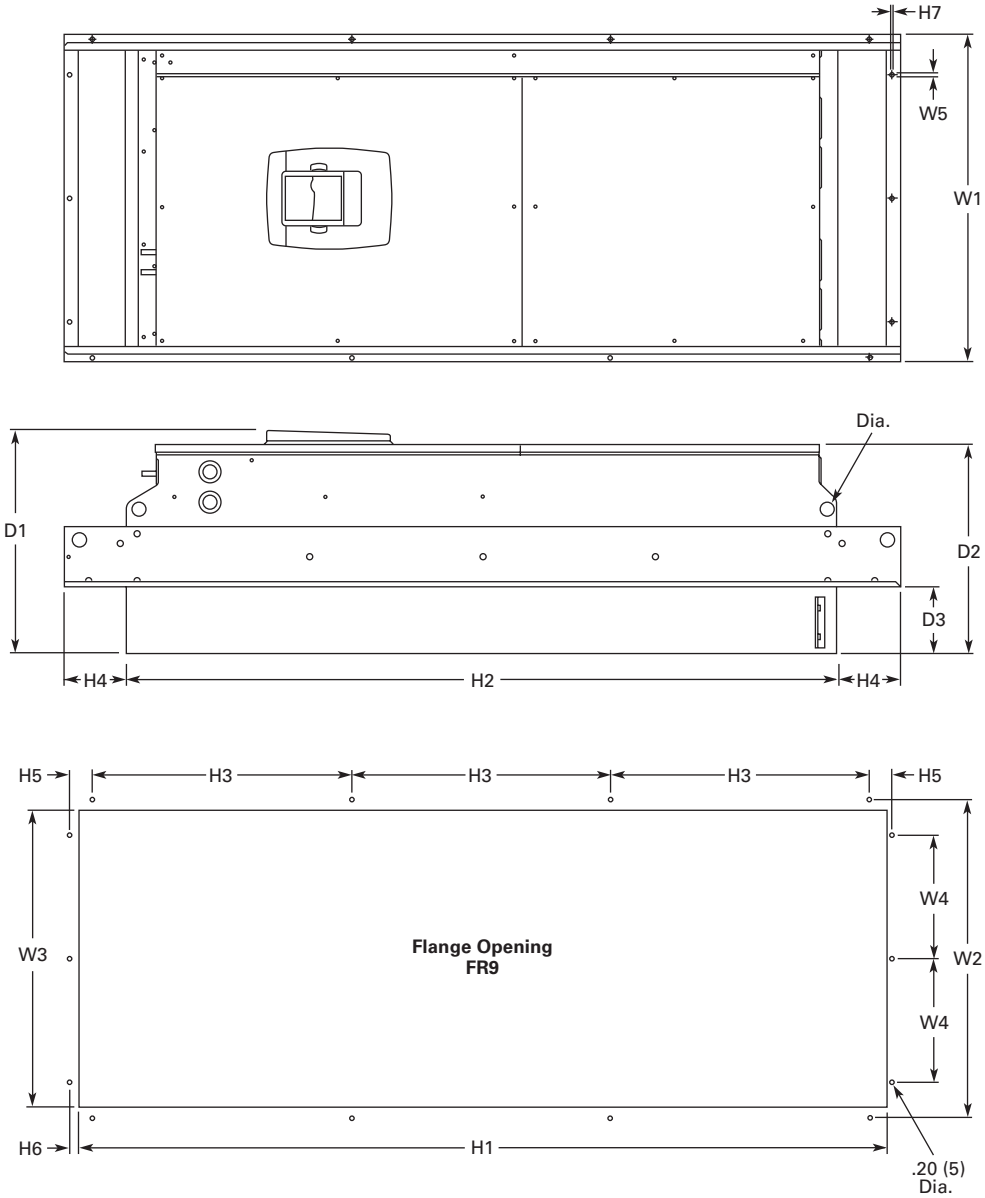

W1	W2	W3	W4	W5	H1	H2	H3	H4	H5	H6	H7	D1	D2	D3	Dia.
20.9 (530)	20.0 (510)	19.1 (485)	7.9 (200)	0.2 (5.5)	51.7 (1312)	45.3 (1150)	16.5 (420)	3.9 (100)	1.4 (35)	0.4 (9)	0.1 (2)	24.9 (362)	13.4 (340)	4.3 (109)	0.8 (21)

Approximate Dimensions in Inches (mm)

NEMA Type 1/IP21 and NEMA Type 12/IP54, FR10 Freestanding

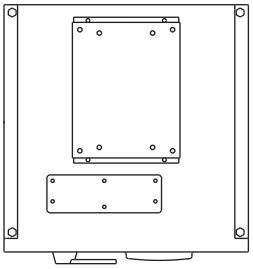

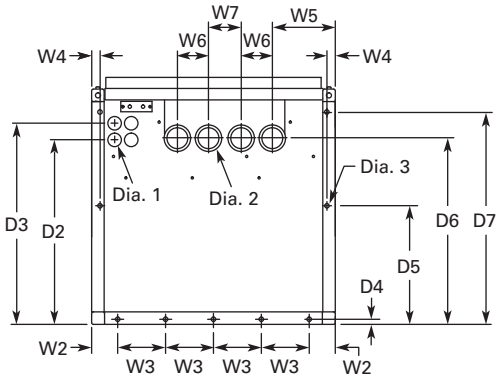

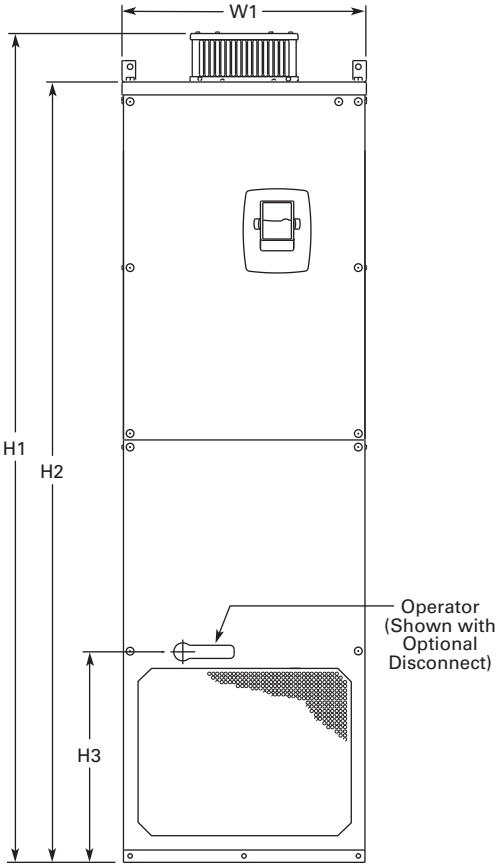

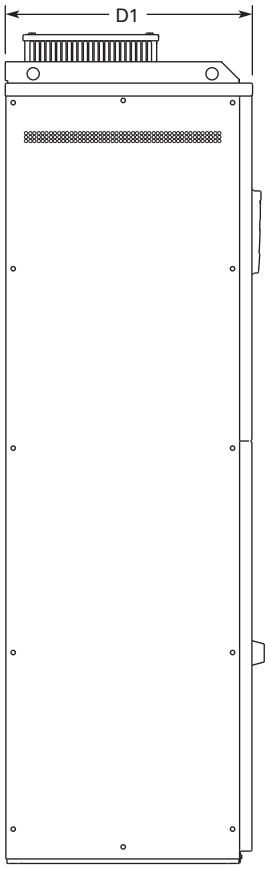

W1	W2	W3	W4	W5	W6	W7	H1	H2	H3	D1	D2	D3	D4	D5	D6	D7	Dia. 1	Dia. 2	Dia. 3	Weight Lbs (kg)
23.43 (595)	2.46 (62.5)	4.53 (115)	0.79 (20)	5.95 (151)	2.95 (75)	30.11 (79)	79.45 (2018)	74.80 (1900)	20.18 (512.5)	23.70 (602)	17.44 (443)	19.02 (483)	0.47 (12)	11.22 (285)	17.60 (447)	20.08 (510)	0.83 (21)	1.89 (48)	0.43 (11)	857 (389)

Approximate Dimensions in Inches (mm)

FR10 Open Chassis ①

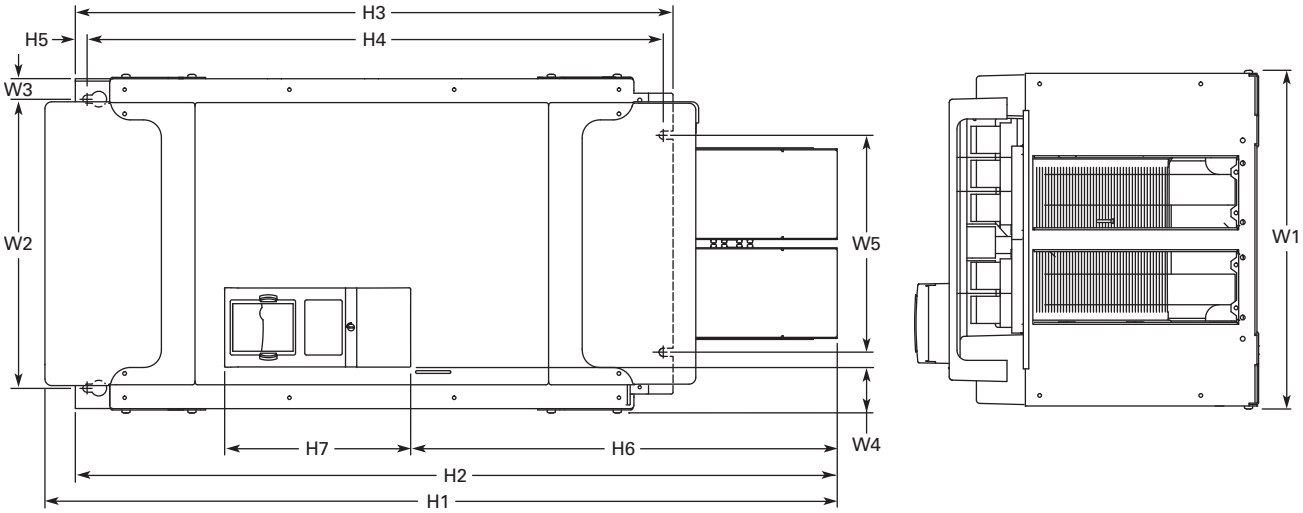

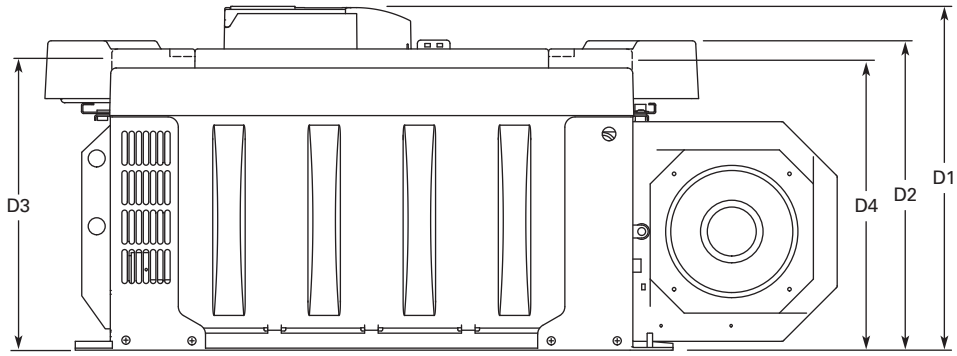

Voltage	hp (I_H)	W1	W2	W3	W4	W5	H1	H2	H3	H4	H5	H6	H7	D1	D2	D3	D4	Weight Lbs (kg)
480 V	250–350	19.7 (500)	16.7 (425)	1.2 (30)	2.6 (67)	12.8 (325)	45.9 (1165)	44.1 (1121)	34.6 (879)	33.5 (850)	0.7 (17)	24.7 (627)	10.8 (275)	19.9 (506)	17.9 (455)	16.7 (423)	16.6 (421)	518 (235)
575 V	200–300																	

Note

① 9000X FR12 is built of two FR10 modules. Please refer to SPX installation manual for mounting instructions.

Approximate Dimensions in Inches (mm)

NEMA Type 1/IP21, FR11 Freestanding Drive

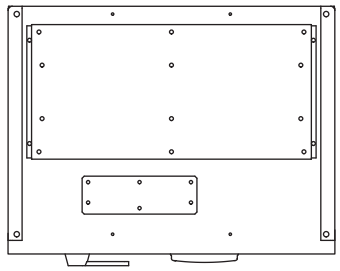

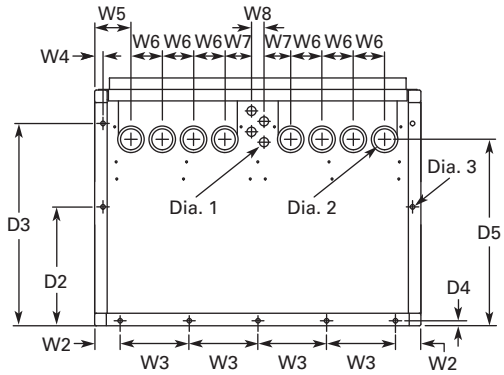

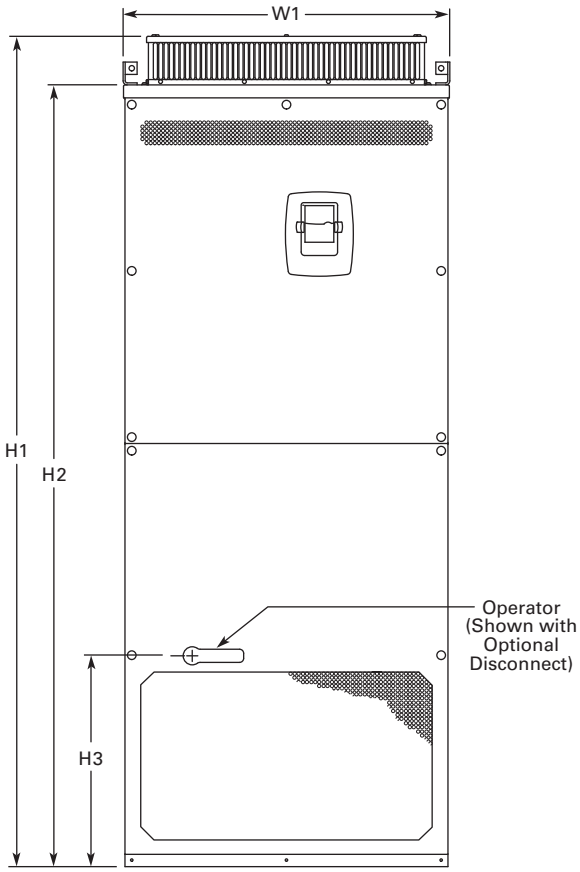

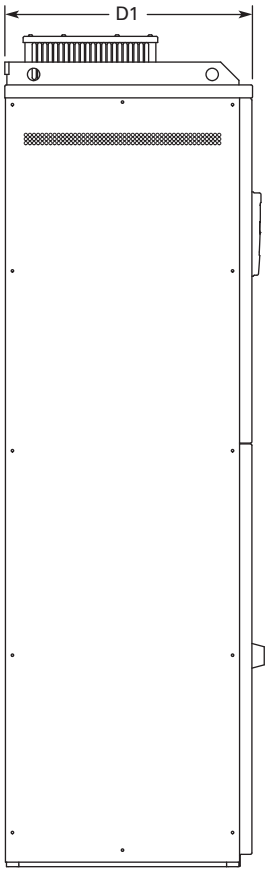

Voltage	hp (I_H)	W1	W2	W3	W4	W5	W6	W7	W8	H1	H2	H3	D1	D2	D3	D4	D5	Dia. 1	Dia. 2	Dia. 3	Weight Lbs (kg)
480	400–550	31.26 (794)	2.40 (61)	6.50 (165)	0.79 (20)	3.43 (87)	2.95 (75)	2.52 (64)	1.18 (30)	79.45 (2018)	74.80 (1900)	20.18 (512.5)	23.70 (602)	11.22 (285)	19.09 (485)	0.47 (12)	17.60 (447)	0.83 (21)	1.89 (48)	0.35 x 0.43 (9 x 11)	526 (239)

Approximate Dimensions in Inches (mm)

FR11 Open Chassis

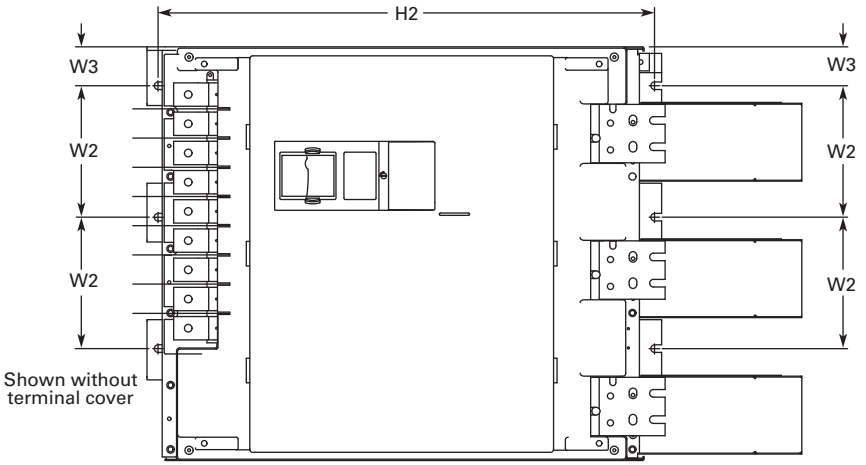

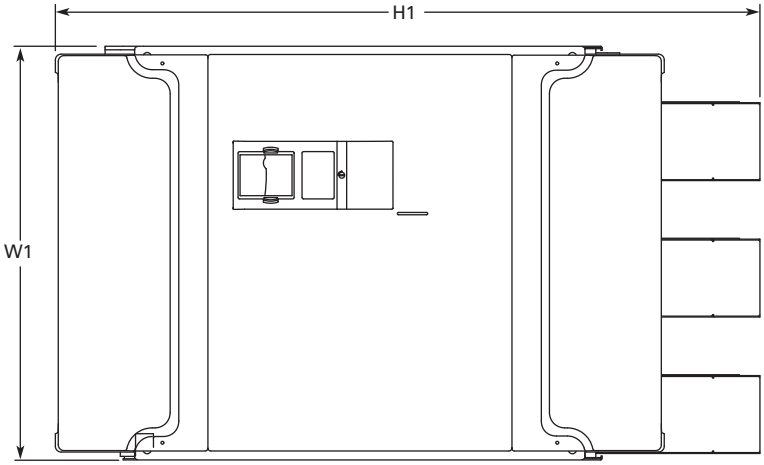

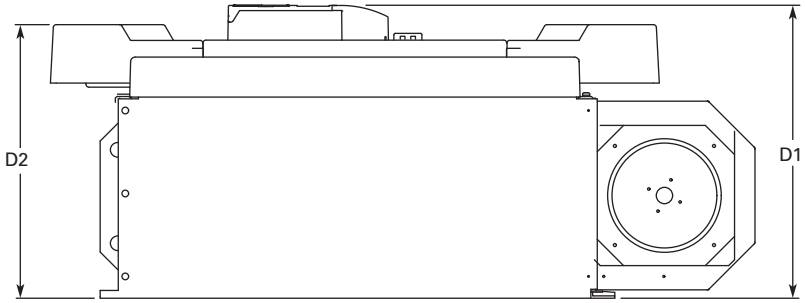

Voltage	hp (I_H)	W1	W2	W3	H1	H2	D1	D2	Weight Lbs (kg)
480 V	400–550	27.9 (709)	8.86 (225)	2.6 (67)	45.5 (1155)	33.5 (850)	19.8 (503)	18.4 (468)	833 (378)
575 V	400–500								

Approximate Dimensions in Inches (mm)

FR13, Open Chassis Inverter

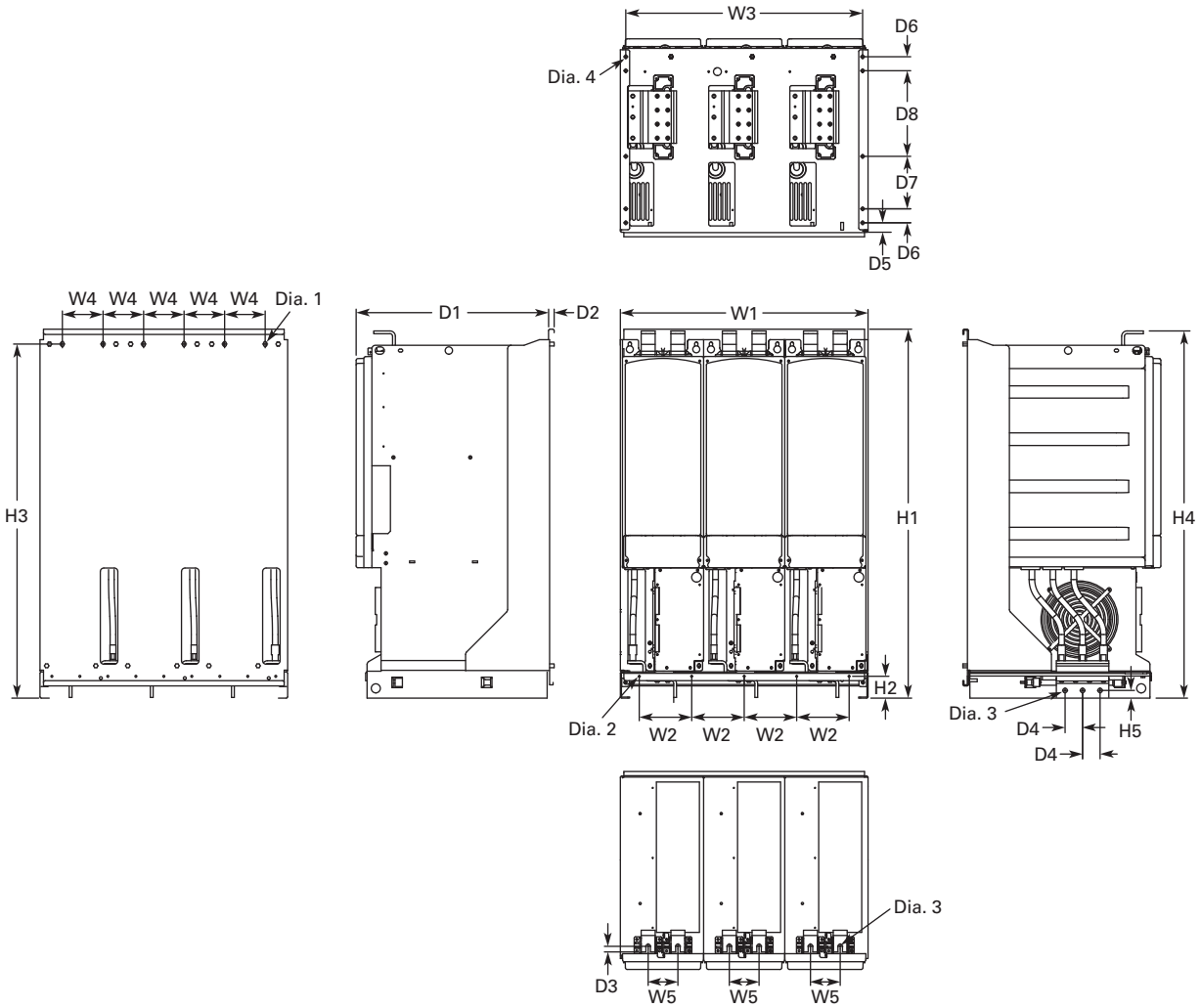

W1	W2	W3	W4	W5	H1	H2	H3	H4	H5	D1	D2	D3	D4	D5	D6	D7	D8	Dia. 1	Dia. 2	Dia. 3	Dia. 4	Weight Lbs (kg)
27.87 (708)	5.91 (150)	26.65 (677)	4.57 (116)	3.35 (85)	41.54 (1055)	2.46 (62.5)	39.86 (1012.5)	41.34 (1050)	0.79 (20)	21.77 (553)	0.51 (13)	0.63 (16)	1.97 (50)	1.06 (27)	1.57 (40)	5.91 (150)	9.64 (244.8)	0.35x0.59 (9x15)	0.18 (4.6)	0.51 (13)	0.37 (9.5)	683 (310)

Notes

9000X FR14 is built of two FR13 modules. Please refer to SPX installation manual for mounting instructions.

FR13 is built from an inverter module and a converter module. Please refer to SPX installation manual for mounting instructions.

Approximate Dimensions in Inches (mm)

FR13, Open Chassis Converter

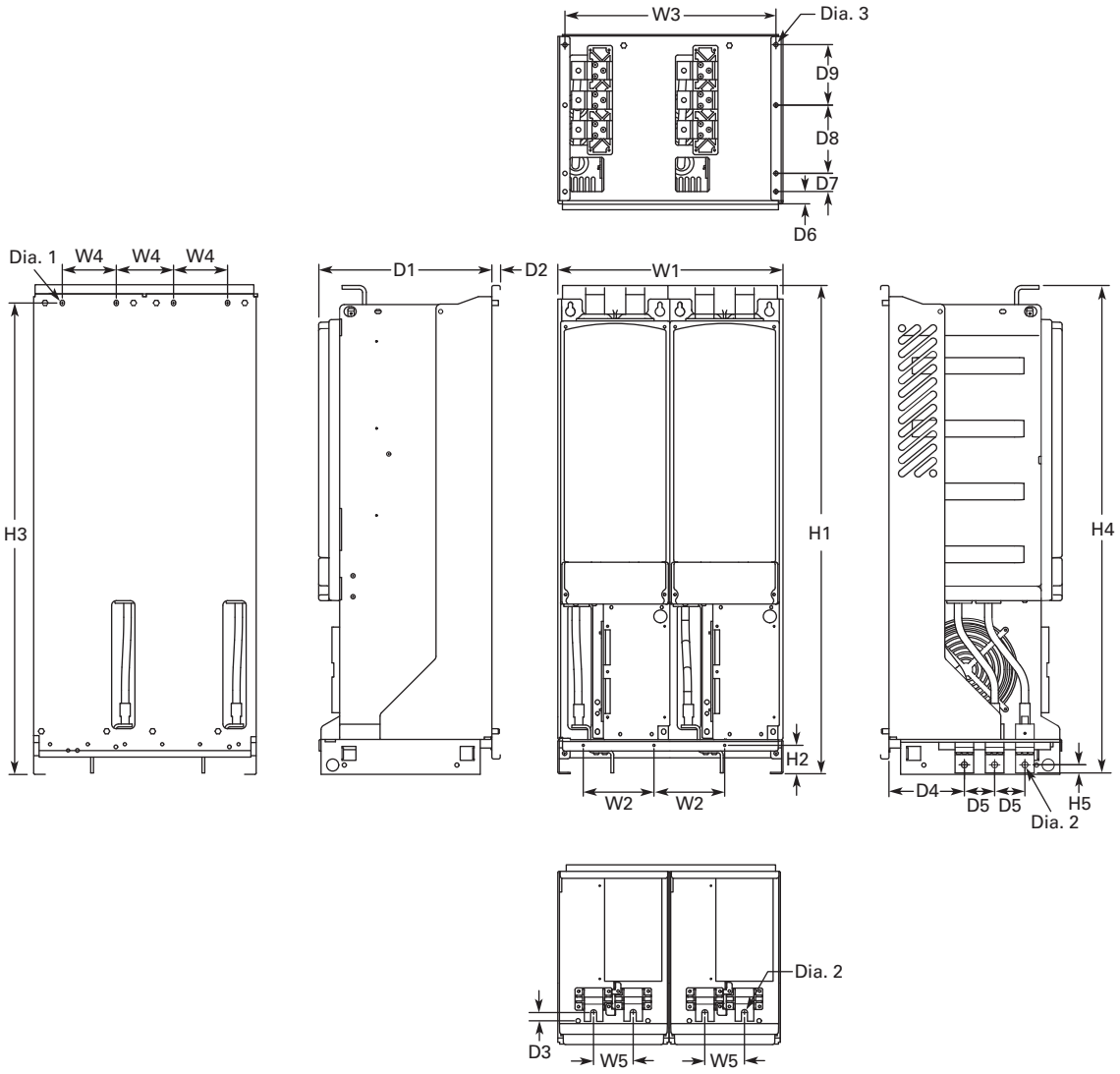

W1	W2	W3	W4	W5	H1	H2	H3	H4	H5	D1	D2	D3	D4	D5	D6	D7	D8	D9	Dia. 1	Dia. 2	Dia. 3	Weight Lbs (kg)
18.74 (476)	5.91 (150)	17.52 (445)	4.57 (116)	3.35 (85)	41.54 (1055)	2.46 (62.5)	39.86 (1012.5)	41.34 (1050)	0.69 (17.5)	14.69 (373)	0.51 (13)	0.73 (18.5)	6.42 (163)	2.56 (65)	1.06 (27)	1.57 (40)	5.91 (150)	5.24 (133)	0.35x0.59 (9x15)	0.51 (13)	0.37 (9.5)	295 (134)

Number of Input Units

480 V Catalog Number	hp	Input Modules
SPX800A0-4A2N1	800	2

690 V Catalog Number	hp	Input Modules
SPX800A0-5A2N1	800	2
SPX900A0-5A2N1	900	2
SPXH10A0-5A2N1	1000	2

Approximate Dimensions in Inches (mm)

FR13, Open Chassis Converter—900/1000 hp 480 V

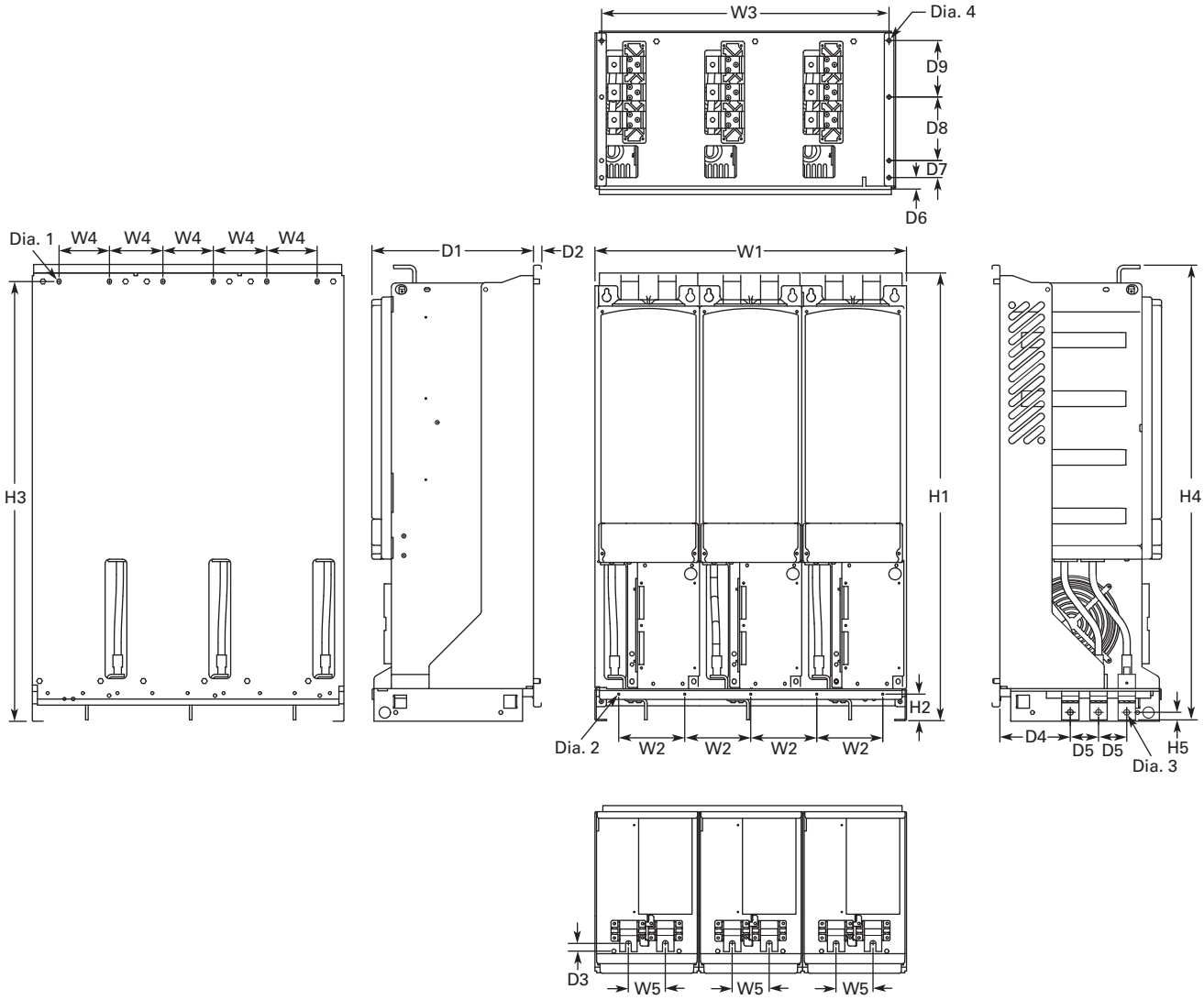

W1	W2	W3	W4	W5	H1	H2	H3	H4	H5	D1	D2	D3	D4	D5	D6	D7	D8	D9	Dia. 1	Dia. 2	Dia. 3	Dia. 4	Weight Lbs (kg)
27.87 (708)	5.91 (150)	26.65 (677)	4.57 (116)	3.35 (85)	41.54 (1055)	2.46 (62.5)	39.86 (1012.5)	41.34 (1050)	0.69 (17.5)	14.69 (373)	0.51 (13)	0.73 (18.5)	6.42 (163)	2.56 (65)	1.06 (27)	1.57 (40)	5.91 (150)	5.24 (133)	0.35x0.59 (9x15)	0.18 (4.6)	0.51 (13)	0.37 (9.5)	443 (201)

Number of Input Units

480 V Catalog Number	hp	Input Modules
SPX900A0-4A2N1	900	3
SPXH10A0-4A2N1	1000	3

Approximate Dimensions in Inches (mm)

AC Choke Dimensions

Choke Types

Catalog Number	Frame Size	Choke Type ①
Voltage Range 380–500 V		
SPX 250 4	FR10	CHK0400
SPX 300 4		CHK0520
SPX 350 4		CHK0520
SPX 400 4	FR11	2 x CHK0400
SPX 500 4		2 x CHK0400
SPX 550 4		2 x CHK0400
SPX 600 4	FR12	2 x CHK0520
SPX 650 4		2 x CHK0520
SPX 700 4		2 x CHK0520
SPX 800 4	FR13	2 x CHK0400
SPX 900 4		3 x CHK0520
SPX H10 4		3 x CHK0520
SPX H12 4	FR14	4 x CHK0520
SPX H16 4		6 x CHK0400

Catalog Number	Frame Size	Choke Type ①
Voltage Range 525–690 V		
SPX 200 5	FR10	CHK0261
SPX 250 5		CHK0400
SPX 300 5		CHK0400
SPX 400 5	FR11	CHK0520
SPX 450 5		CHK0520
SPX 500 5		2 x CHK0400
SPX 550 5	FR12	2 x CHK0400
SPX 600 5		2 x CHK0400
SPX 700 5		2 x CHK0400
SPX 800 5	FR13	2 x CHK0400
SPX 900 5		2 x CHK0400
SPX H10 5		2 x CHK0400
SPX H13 5	FR14	4 x CHK0400
SPX H15 5		6 x CHK0400

CHK0520

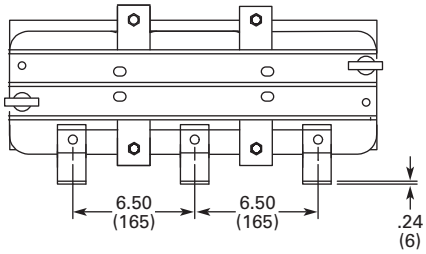

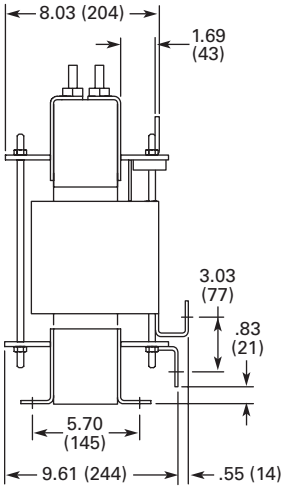

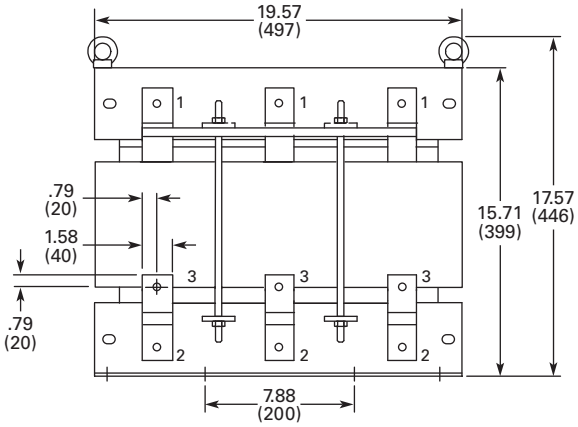

Note

① Chokes are provided with all FR10–FR14 drives.

Approximate Dimensions in Inches (mm)

CHK0400

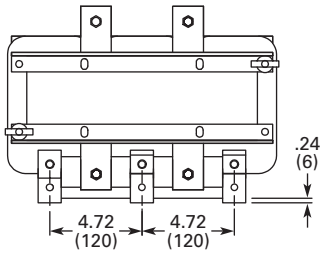

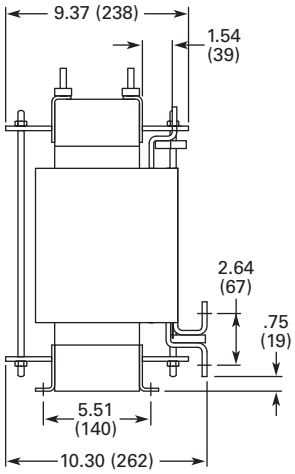

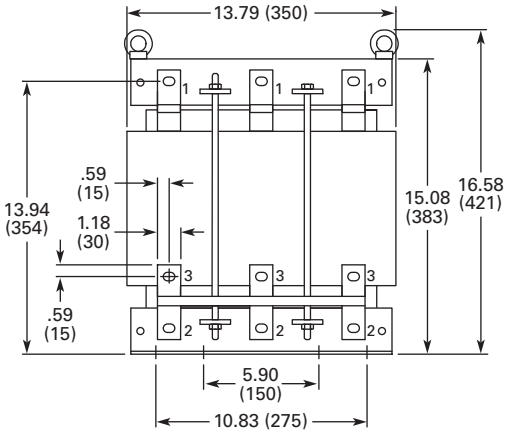

CHK0261

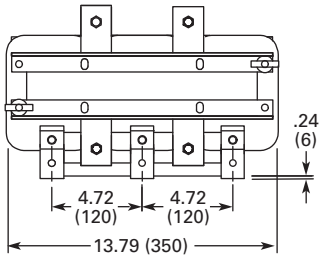

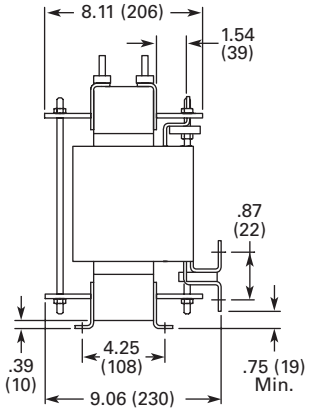

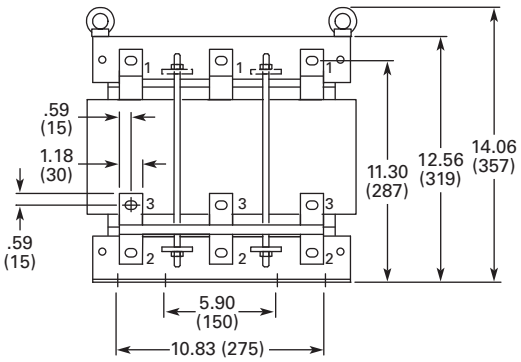

SVX Enclosed Drives

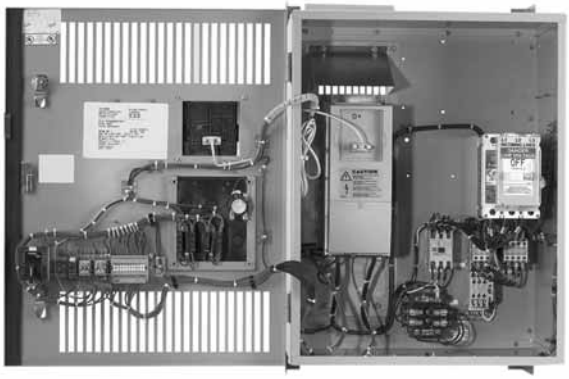

Contents

Description	*Page*
SVX Drives	**V6-T2-97**
SVX Enclosed Drives	
Catalog Number Selection	**V6-T2-136**
Product Selection	**V6-T2-138**
Enclosure Selection	**V6-T2-144**
Options	**V6-T2-145**
Technical Data and Specifications	**V6-T2-148**
Dimensions	**V6-T2-150**

SVX Enclosed Drives

Product Description

Eaton's line of enclosed SVX drives combine the proven performance from Eaton's SVX drives with the enhanced capabilities of enclosed control. With a comprehensive list of pre-engineered options, Eaton's SVX enclosed drives eliminate the lead time normally associated with customer specific options. For those applications with more unique or complex requirements, Eaton offers individually engineered solutions to meet the customer's needs.

Features and Benefits

- Dual rated for both constant torque (CT) / high overload (I_H) and variable torque (VT) / low overload applications
- Optional Brake Chopper for external braking applications
- High-performance drive option uses an Eaton SPX (I_H) drive that allows for increased functionality and performance
- Available circuit breaker, motor circuit protector, isolation fusing and surge protection device options to provide input power protection
- Optional 3% input and output reactors provide a reduction in voltage and current harmonics on both line and load side
- Bypass options include a standard three-contactor design and a reduced voltage soft starter design
- Output contactor option provides a means for positive disconnection of the drive output from the motor terminals
- MotoRX and dV/dt filter options are used to reduce transients voltages at the motor terminals
- Customizable cover control options
- Padlockable disconnect

Communication Options

- Modbus
- Modbus/TCP
- Johnson Controls N2
- BACnet
- EtherNet/IP
- PROFIBUS-DP
- LonWorks
- CANopen
- DeviceNet

Enclosure Ratings

- NEMA Type 1
- NEMA Type 12
- NEMA Type 3R

Mounting

- Wall mount
- Floor mount: 12-inch legs
- Floor mount: 22-inch legs

Product Range

- 208 V: 0.75–100 hp
- 230 V: 0.75–125 hp
- 480 V: 1–800 hp
- 575 V: 2–800 hp
- 230 V single-phase: 1–30 hp
- 480 V single-phase: 1.5–60 hp

Standards and Certifications

- UL 508C

Listed

Catalog Number Selection

Catalog Number Selection is for reference only. Not all option combinations may be available.

2

SVX Enclosed—Base Catalog Number

SVX F07 1 A 1 _ _ _ _ _ _

Product Family

SVX = Enclosed SVX drives—standard

Options ③

See **Page V6-T2-137** for catalog number option selection.

Enclosure Rating ②

1 = NEMA Type 1
2 = NEMA Type 12
3 = NEMA Type 3R
6 = NEMA Type 1 Filtered and gasketed
• = Custom option

Output Horsepower Rating

208 V	230 V	480 V	575 V
F07 = 0.75 hp	**F07** = 0.75 hp	**001** = 1 hp	**002** = 2 hp
001 = 1 hp	**001** = 1 hp	**F15** = 1.5 hp	**003** = 3 hp
F15 = 1.5 hp	**F15** = 1.5 hp	**002** = 2 hp	**005** = 5 hp
002 = 2 hp	**002** = 2 hp	**003** = 3 hp	**007** = 7.5 hp
003 = 3 hp	**003** = 3 hp	**005** = 5 hp	**010** = 10 hp
005 = 5 hp	**005** = 5 hp	**007** = 7.5 hp	**015** = 15 hp
007 = 7.5 hp	**007** = 7.5 hp	**010** = 10 hp	**020** = 20 hp
010 = 10 hp	**010** = 10 hp	**015** = 15 hp	**025** = 25 hp
015 = 15 hp	**015** = 15 hp	**020** = 20 hp	**030** = 30 hp
020 = 20 hp	**020** = 20 hp	**025** = 25 hp	**040** = 40 hp
025 = 25 hp	**025** = 25 hp	**030** = 30 hp	**050** = 50 hp
030 = 30 hp	**030** = 30 hp	**040** = 40 hp	**060** = 60 hp
040 = 40 hp	**040** = 40 hp	**050** = 50 hp	**075** = 75 hp
050 = 50 hp	**050** = 50 hp	**060** = 60 hp	**100** = 100 hp
060 = 60 hp	**060** = 60 hp	**075** = 75 hp	**125** = 125 hp
075 = 75 hp	**075** = 75 hp	**100** = 100 hp	**150** = 150 hp
100 = 100 hp	**100** = 100 hp	**125** = 125 hp	**200** = 200 hp
	125 = 125 hp	**150** = 150 hp	**250** = 250 hp
		200 = 200 hp	**300** = 300 hp
		250 = 250 hp	**350** = 350 hp
		300 = 300 hp	**400** = 400 hp
		350 = 350 hp	**500** = 500 hp
		400 = 400 hp	**550** = 550 hp
		500 = 500 hp	**600** = 600 hp
		550 = 550 hp	**650** = 650 hp
		600 = 600 hp	**700** = 700 hp
		650 = 650 hp	**800** = 800 hp
		700 = 700 hp	
		800 = 800 hp	

Drive Type/Braking/Application ①

A = Standard drive/no brake chopper/low overload
B = Standard drive/brake chopper/low overload
C = Standard drive/no brake chopper/high overload
D = Standard drive/brake chopper/high overload
E = High-performance drive/no brake chopper/low overload
F = High-performance drive/brake chopper/low overload
G = High-performance drive/no brake chopper/high overload
H = High-performance drive/brake chopper/high overload

Phasing and Voltage Rating

1 = Input: Three-phase, 208 V Output: Three-phase
2 = Input: Three-phase, 230 V Output: Three-phase
4 = Input: Three-phase, 480 V Output: Three-phase
5 = Input: Three-phase, 575 V Output: Three-phase
J = Input: Single-phase, 230 V Output: Three-phase
K = Input: Single-phase, 480 V Output: Three-phase

Notes

① Brake chopper is a factory-installed option only. Braking resistors sold separately. See SVX catalog section for selection.
② Additional enclosure options including NEMA 4 and 4X are available. Please contact the factory for configuration and pricing.
③ Part number configuration continued on the following page.

Catalog Number Selection is for reference only. Not all option combinations may be available.

SVX Enclosed—Catalog Number Options

SVX F07 1 A 1 — 2 0 0 B 1 0 0 0 0

Base Catalog Number Example

See **Page V6-T2-136** for base catalog number selection.

Power Disconnect Options

0 = None
1 = MCP disconnect ①
2 = Circuit breaker
3 = Circuit breaker/isolation fusing
4 = Circuit breaker/isolation fusing/3% input reactor
5 = Circuit breaker/isolation fusing/SPD
6 = Circuit breaker/isolation fusing/SPD/3% input reactor
7 = Circuit breaker/3% input reactor
8 = Circuit breaker/SPD
9 = Circuit breaker/SPD/3% input reactor
A = Fused disconnect
B = Fused disconnect/SPD
C = Fused disconnect/SPD/3% input reactor
D = Fused disconnect/3% input reactor
E = Isolation fuses
F = Isolation fuses/3% input reactor
G = Isolation fuses/SPD
H = Isolation fuses/SPD/3% input reactor
• = Custom option ②

Bypass Options ③

0 = None
1 = Manual HOA bypass
2 = Manual HOA bypass/isolation fusing
3 = Manual HOA bypass/isolation fusing/3% input reactor
4 = Manual HOA bypass/isolation fusing/SPD
5 = Manual HOA bypass/isolation fusing/SPD/3% input reactor
6 = Manual HOA bypass/3% input reactor
7 = Manual HOA bypass/SPD
8 = Manual HOA bypass/SPD/3% input reactor
H = Manual HOA RVSS bypass
J = Manual HOA RVSS bypass/isolation fusing
K = Manual HOA RVSS bypass/isolation fusing/3% input reactor
L = Manual HOA RVSS bypass/isolation fusing/SPD
M = Manual HOA RVSS bypass/isolation fusing/SPD/3% input reactor
N = Manual HOA RVSS bypass/3% input reactor
P = Manual HOA RVSS bypass/SPD
R = Manual HOA RVSS bypass/SPD/3% input reactor
• = Custom option ②

Output Power Options ④

0 = None
A = Output contactor
B = 3% Output reactor
D = dV/dt filter
E = 3% Output Reactor/output contactor
G = dV/dt/output contactor
• = Custom option ②

Control Options ⑤

0 = None
1 = Speed pot
2 = Start-stop pushbutton
3 = Start-stop pushbutton with speed pot
A = HOA switch
B = Start-stop pushbutton with speed pot & HOA switch
C = Start-stop pushbutton with HOA switch
D = HOA switch with speed pot
• = Custom option ②

Light Options ⑤

0 = None
1 = Non-bypass light kit—Power On, Run, Fault
2 = Bypass light kit—On, VFD Run, Fault, Bypass Run
• = Custom option ②

Enclosure Options

0 = None
1 = Floor stand—12 inches
2 = Floor stand—22 inches
A = Space heater
B = Space heater & 12-inch floor stands
C = Space heater & 22-inch floor stands
• = Custom option ②

Communication Options

0 = No option
1 = PROFIBUS-DP
2 = LonWorks
3 = CANopen (slave)
4 = DeviceNet
5 = PROFIBUS-DP (D9 connector)
6 = Modbus
7 = Modbus (D9 connector)
8 = Johnson Controls N2
9 = Modbus TCP
A = BACnet
B = EtherNet/IP
C = RS-232 with D9 connector
• = Custom option ②

Option Boards 1

0 = No option
6 = 6 DI, 1 ext +24 Vdc/EXT +24 Vdc
7 = 1 RO (NC-NO), 1 RO (NO), 1 therm
8 = 1 AI (mA isolated), 2 AO (mA isolated), 1 ext +24 Vdc/EXT +24 Vdc
9 = 3 RO (NO)
A = 1 ext +24 Vdc/EXT +24 Vdc, 3 Pt100
B = 1 RO (NO), 5 DI 42–240 Vac input
C = Encoder low volt +5 V / 15 V / 24 V (high-performance drive only)
D = Encoder high volt +15 V / 24 V (high-performance drive only)
E = Double encoder (high-performance drive only)
• = Custom option ②

Option Boards 2

Same options and codes as Option Boards 1

Notes

① HMCP disconnect option required and only available when bypass is selected.
② More options are available as Engineered to Order through the Bid Manager tool.
③ All bypass options include third contactor for drive isolation when in bypass mode.
④ Output contactor not available with bypass. Bypass comes standard with output contactor.
⑤ Pilot devices are 22 mm standard. 30 mm options are available as engineered to order through the Bid Manager tool.

Product Selection

208 V Drives

SVX Enclosed Drives

208 V Drives—Constant Torque (CT)/High Overload (I_H) Enclosed Drives

hp	Current (A)	Drive Frame Size	NEMA Type 1 Base Catalog Number ①	NEMA Type 12 Base Catalog Number ①	NEMA Type 3R Base Catalog Number ①
0.75	3.5	4	**SVXF071D1**	**SVXF071D2**	**SVXF071D3**
1	4.6	4	**SVX0011D1**	**SVX0011D2**	**SVX0011D3**
1.5	6.6	4	**SVXF151D1**	**SVXF151D2**	**SVXF151D3**
2	7.5	4	**SVX0021D1**	**SVX0021D2**	**SVX0021D3**
3	10.6	4	**SVX0031D1**	**SVX0031D2**	**SVX0031D3**
5	16.7	5	**SVX0051D1**	**SVX0051D2**	**SVX0051D3**
7.5	24.2	5	**SVX0071D1**	**SVX0071D2**	**SVX0071D3**
10	30.8	6	**SVX0101D1**	**SVX0101D2**	**SVX0101D3**
15	46.2	6	**SVX0151D1**	**SVX0151D2**	**SVX0151D3**
20	59.4	7	**SVX0201C1**	**SVX0201C2**	**SVX0201C3**
25	74.8	7	**SVX0251C1**	**SVX0251C2**	**SVX0251C3**
30	88	7	**SVX0301C1**	**SVX0301C2**	**SVX0301C3**
40	114	8	**SVX0401C1**	**SVX0401C2**	**SVX0401C3**
50	143	8	**SVX0501C1**	**SVX0501C2**	**SVX0501C3**
60	169	8	**SVX0601C1**	**SVX0601C2**	**SVX0601C3**
75	211	9	**SVX0751C1**	**SVX0751C2**	**SVX0751C3**
②	261	9	**SVX1001C1**	**SVX1001C2**	**SVX1001C3**

SVX Enclosed Drives

208 V Drives—Variable Torque (VT)/Low Overload (I_L) Enclosed Drives

hp	Current (A)	Drive Frame Size	NEMA Type 1 Base Catalog Number ①	NEMA Type 12 Base Catalog Number ①	NEMA Type 3R Base Catalog Number ①
1	4.6	4	**SVX0011B1**	**SVX0011B2**	**SVX0011B3**
1.5	6.6	4	**SVXF151B1**	**SVXF151B2**	**SVXF151B3**
2	7.5	4	**SVX0021B1**	**SVX0021B2**	**SVX0021B3**
3	10.6	4	**SVX0031B1**	**SVX0031B2**	**SVX0031B3**
5	16.7	5	**SVX0051B1**	**SVX0051B2**	**SVX0051B3**
7.5	24.2	5	**SVX0071B1**	**SVX0071B2**	**SVX0071B3**
10	30.8	5	**SVX0101B1**	**SVX0101B2**	**SVX0101B3**
15	46.2	6	**SVX0151B1**	**SVX0151B2**	**SVX0151B3**
20	59.4	6	**SVX0201B1**	**SVX0201B2**	**SVX0201B3**
25	74.8	7	**SVX0251A1**	**SVX0251A2**	**SVX0251A3**
30	88	7	**SVX0301A1**	**SVX0301A2**	**SVX0301A3**
40	114	7	**SVX0401A1**	**SVX0401A2**	**SVX0401A3**
50	143	8	**SVX0501A1**	**SVX0501A2**	**SVX0501A3**
60	169	8	**SVX0601A1**	**SVX0601A2**	**SVX0601A3**
75	211	9	**SVX0751A1**	**SVX0751A2**	**SVX0751A3**
100	273	9	**SVX1001A1**	**SVX1001A2**	**SVX1001A3**

Notes

① Table is for base catalog number reference only. For complete catalog number selection, see **Page V6-T2-136**.

② These units are current rated. They do not meet NEC ampere rating at this horsepower.

230 V Drives

SVX Enclosed Drives

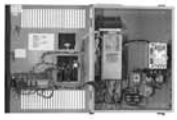

230 V Drives—Constant Torque (CT)/High Overload (I_H) Enclosed Drives

hp	Current (A)	Drive Frame Size	NEMA Type 1 Base Catalog Number ①	NEMA Type 12 Base Catalog Number ①	NEMA Type 3R Base Catalog Number ①
0.75	3.2	4	**SVXF072D1**	**SVXF072D2**	**SVXF072D3**
1	4.2	4	**SVX0012D1**	**SVX0012D2**	**SVX0012D3**
1.5	6	4	**SVXF152D1**	**SVXF152D2**	**SVXF152D3**
2	6.8	4	**SVX0022D1**	**SVX0022D2**	**SVX0022D3**
3	9.6	4	**SVX0032D1**	**SVX0032D2**	**SVX0032D3**
5	15.2	5	**SVX0052D1**	**SVX0052D2**	**SVX0052D3**
7.5	22	5	**SVX0072D1**	**SVX0072D2**	**SVX0072D3**
10	28	6	**SVX0102D1**	**SVX0102D2**	**SVX0102D3**
15	42	6	**SVX0152D1**	**SVX0152D2**	**SVX0152D3**
20	54	7	**SVX0202C1**	**SVX0202C2**	**SVX0202C3**
25	68	7	**SVX0252C1**	**SVX0252C2**	**SVX0252C3**
30	80	7	**SVX0302C1**	**SVX0302C2**	**SVX0302C3**
40	104	8	**SVX0402C1**	**SVX0402C2**	**SVX0402C3**
50	130	8	**SVX0502C1**	**SVX0502C2**	**SVX0502C3**
60	154	8	**SVX0602C1**	**SVX0602C2**	**SVX0602C3**
75	192	9	**SVX0752C1**	**SVX0752C2**	**SVX0752C3**
100	248	9	**SVX1002C1**	**SVX1002C2**	**SVX1002C3**

SVX Enclosed Drives

230 V Drives—Variable Torque (VT)/Low Overload (I_L) Enclosed Drives

hp	Current (A)	Drive Frame Size	NEMA Type 1 Base Catalog Number ①	NEMA Type 12 Base Catalog Number ①	NEMA Type 3R Base Catalog Number ①
1	4.2	4	**SVX0012B1**	**SVX0012B2**	**SVX0012B3**
1.5	6	4	**SVXF152B1**	**SVXF152B2**	**SVXF152B3**
2	6.8	4	**SVX0022B1**	**SVX0022B2**	**SVX0022B3**
3	9.6	4	**SVX0032B1**	**SVX0032B2**	**SVX0032B3**
5	15.2	5	**SVX0052B1**	**SVX0052B2**	**SVX0052B3**
7.5	22	5	**SVX0072B1**	**SVX0072B2**	**SVX0072B3**
10	28	5	**SVX0102B1**	**SVX0102B2**	**SVX0102B3**
15	42	6	**SVX0152B1**	**SVX0152B2**	**SVX0152B3**
20	54	6	**SVX0202B1**	**SVX0202B2**	**SVX0202B3**
25	68	7	**SVX0252A1**	**SVX0252A2**	**SVX0252A3**
30	80	7	**SVX0302A1**	**SVX0302A2**	**SVX0302A3**
40	104	7	**SVX0402A1**	**SVX0402A2**	**SVX0402A3**
50	130	8	**SVX0502A1**	**SVX0502A2**	**SVX0502A3**
60	154	8	**SVX0602A1**	**SVX0602A2**	**SVX0602A3**
75	192	8	**SVX0752A1**	**SVX0752A2**	**SVX0752A3**
100	248	9	**SVX1002A1**	**SVX1002A2**	**SVX1002A3**
②	300	9	**SVX1252A1**	**SVX1252A2**	**SVX1252A3**

Notes

① Table is for base catalog number reference only. For complete catalog number selection, see **Page V6-T2-136**.

② These units are current rated. They do not meet NEC ampere rating at this horsepower.

480 V Drives

SVX Enclosed Drives

480 V Drives—Constant Torque (CT)/High Overload (I_H) Enclosed Drives

hp	Current (A)	Drive Frame Size	NEMA Type 1 Base Catalog Number ①	NEMA Type 12 Base Catalog Number ①	NEMA Type 3R Base Catalog Number ①
1	2.1	4	**SVX0014D1**	**SVX0014D2**	**SVX0014D3**
1.5	3	4	**SVXF154D1**	**SVXF154D2**	**SVXF154D3**
2	3.4	4	**SVX0024D1**	**SVX0024D2**	**SVX0024D3**
3	4.8	4	**SVX0034D1**	**SVX0034D2**	**SVX0034D3**
5	7.6	4	**SVX0054D1**	**SVX0054D2**	**SVX0054D3**
7.5	11	5	**SVX0074D1**	**SVX0074D2**	**SVX0074D3**
10	14	5	**SVX0104D1**	**SVX0104D2**	**SVX0104D3**
15	21	5	**SVX0154D1**	**SVX0154D2**	**SVX0154D3**
20	27	6	**SVX0204D1**	**SVX0204D2**	**SVX0204D3**
25	34	6	**SVX0254D1**	**SVX0254D2**	**SVX0254D3**
30	40	6	**SVX0304D1**	**SVX0304D2**	**SVX0304D3**
40	52	7	**SVX0404C1**	**SVX0404C2**	**SVX0404C3**
50	65	7	**SVX0504C1**	**SVX0504C2**	**SVX0504C3**
60	77	7	**SVX0604C1**	**SVX0604C2**	**SVX0604C3**
75	96	8	**SVX0754C1**	**SVX0754C2**	**SVX0754C3**
100	124	8	**SVX1004C1**	**SVX1004C2**	**SVX1004C3**
125	156	8	**SVX1254C1**	**SVX1254C2**	**SVX1254C3**
150	180	9	**SVX1504C1**	**SVX1504C2**	**SVX1504C3**
200	240	9	**SVX2004C1**	**SVX2004C2**	**SVX2004C3**
250	302	10	**SVX2504G1**	**SVX2504G6** ②	**SVX2504G3**
300	361	10	**SVX3004G1**	**SVX3004G6** ②	**SVX3004G3**
350	414	10	**SVX3504G1**	**SVX3504G6** ②	**SVX3504G3**
400	477	11	**SVX4004G1**	**SVX4004G6** ②	**SVX4004G3**
500	590	11	**SVX5004G1**	**SVX5004G6** ②	**SVX5004G3**
550	650	11	**SVX5504G1**	**SVX5504G6** ②	**SVX5504G3**
600	730	12	**SVX6004G1**	**SVX6004G6** ②	**SVX6004G3**
650	820	12	**SVX6504G1**	**SVX6504G6** ②	**SVX6504G3**
700	920	12	**SVX7004G1**	**SVX7004G6** ②	**SVX7004G3**

Notes

① Table is for base catalog number reference only. For complete catalog number selection, see **Page V6-T2-136**.

② Enclosure rating is NEMA Type 1 filtered and gasketed.

480 V Drives, continued

SVX Enclosed Drives

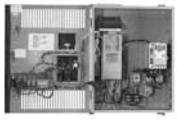

480 V Drives—Variable Torque (VT)/Low Overload (I_L) Enclosed Drives

hp	Current (A)	Drive Frame Size	NEMA Type 1 Base Catalog Number ①	NEMA Type 12 Base Catalog Number ①	NEMA Type 3R Base Catalog Number ①
1.5	3	4	**SVXF154B1**	**SVXF154B2**	**SVXF154B3**
2	3.4	4	**SVX0024B1**	**SVX0024B2**	**SVX0024B3**
3	4.8	4	**SVX0034B1**	**SVX0034B2**	**SVX0034B3**
5	7.6	4	**SVX0054B1**	**SVX0054B2**	**SVX0054B3**
7.5	11	4	**SVX0074B1**	**SVX0074B2**	**SVX0074B3**
10	14	5	**SVX0104B1**	**SVX0104B2**	**SVX0104B3**
15	21	5	**SVX0154B1**	**SVX0154B2**	**SVX0154B3**
20	27	5	**SVX0204B1**	**SVX0204B2**	**SVX0204B3**
25	34	6	**SVX0254B1**	**SVX0254B2**	**SVX0254B3**
30	40	6	**SVX0304B1**	**SVX0304B2**	**SVX0304B3**
40	52	6	**SVX0404B1**	**SVX0404B2**	**SVX0404B3**
50	65	7	**SVX0504A1**	**SVX0504A2**	**SVX0504A3**
60	77	7	**SVX0604A1**	**SVX0604A2**	**SVX0604A3**
75	96	7	**SVX0754A1**	**SVX0754A2**	**SVX0754A3**
100	124	8	**SVX1004A1**	**SVX1004A2**	**SVX1004A3**
125	156	8	**SVX1254A1**	**SVX1254A2**	**SVX1254A3**
150	180	8	**SVX1504A1**	**SVX1504A2**	**SVX1504A3**
200	240	9	**SVX2004A1**	**SVX2004A2**	**SVX2004A3**
②	300	9	**SVX2504A1**	**SVX2504A2**	**SVX2504A3**
300	361	10	**SVX3004E1**	**SVX3004E6** ③	**SVX3004E3**
350	414	10	**SVX3504E1**	**SVX3504E6** ③	**SVX3504E3**
400	477	10	**SVX4004E1**	**SVX4004E6** ③	**SVX4004E3**
500	590	11	**SVX5004E1**	**SVX5004E6** ③	**SVX5004E3**
550	650	11	**SVX5504E1**	**SVX5504E6** ③	**SVX5504E3**
600	730	11	**SVX6004E1**	**SVX6004E6** ③	**SVX6004E3**
650	820	12	**SVX6504E1**	**SVX6504E6** ③	**SVX6504E3**
700	920	12	**SVX7004E1**	**SVX7004E6** ③	**SVX7004E3**
800	1030	12	**SVX8004E1**	**SVX8004E6** ③	**SVX8004E3**

Notes

① Table is for base catalog number reference only. For complete catalog number selection, see **Page V6-T2-136**.
② These units are current rated. They do not meet NEC ampere rating at this horsepower.
③ Enclosure rating is NEMA Type 1 filtered and gasketed.

575 V Drives

SVX Enclosed Drives

575 V Drives—Variable Torque (VT)/Low Overload (I_L) Enclosed Drives

hp	Current (A)	Drive Frame Size	NEMA Type 1 Base Catalog Number ①	NEMA Type 12 Base Catalog Number ①	NEMA Type 3R Base Catalog Number ①
3	3.9	6	**SVX0035B1**	**SVX0035B2**	**SVX0035B3**
5	6.1	6	**SVX0055B1**	**SVX0055B2**	**SVX0055B3**
7.5	9	6	**SVX0075B1**	**SVX0075B2**	**SVX0075B3**
10	11	6	**SVX0105B1**	**SVX0105B2**	**SVX0105B3**
15	17	6	**SVX0155B1**	**SVX0155B2**	**SVX0155B3**
20	22	6	**SVX0205B1**	**SVX0205B2**	**SVX0205B3**
25	27	6	**SVX0255B1**	**SVX0255B2**	**SVX0255B3**
30	32	6	**SVX0305B1**	**SVX0305B2**	**SVX0305B3**
40	41	7	**SVX0405A1**	**SVX0405A2**	**SVX0405A3**
50	52	7	**SVX0505A1**	**SVX0505A2**	**SVX0505A3**
60	62	8	**SVX0605A1**	**SVX0605A2**	**SVX0605A3**
75	77	8	**SVX0755A1**	**SVX0755A2**	**SVX0755A3**
100	99	8	**SVX1005A1**	**SVX1005A2**	**SVX1005A3**
125	125	9	**SVX1255A1**	**SVX1255A2**	**SVX1255A3**
150	144	9	**SVX1505A1**	**SVX1505A2**	**SVX1505A3**
200	192	9	**SVX2005A1**	**SVX2005A2**	**SVX2005A3**
250	242	10	**SVX2505E1**	**SVX2505E6** ②	**SVX2505E3**
300	289	10	**SVX3005E1**	**SVX3005E6** ②	**SVX3005E3**
400	382	10	**SVX4005E1**	**SVX4005E6** ②	**SVX4005E3**
450	412	11	**SVX4505E1**	**SVX4505E6** ②	**SVX4505E3**
500	472	11	**SVX5005E1**	**SVX5005E6** ②	**SVX5005E3**
550	590	11	**SVX5505E1**	**SVX5505E6** ②	**SVX5505E3**
600	650	12	**SVX6005E1**	**SVX6005E6** ②	**SVX6005E3**
700	750	12	**SVX7005E1**	**SVX7005E6** ②	**SVX7005E3**
800	820	12	**SVX8005E1**	**SVX8005E6** ②	**SVX8005E3**

Notes

① Table is for base catalog number reference only. For complete catalog number selection, see **Page V6-T2-136**.

② Enclosure rating is NEMA Type 1 filtered and gasketed.

230 V, Single-Phase Drives

SVX Enclosed Drives

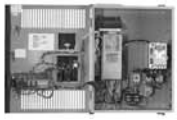

230 V Single-Phase Drives—Variable Torque (VT)/Low Overload (I_L) Enclosed Drives

hp	Current (A)	Drive Frame Size	NEMA Type 1 Base Catalog Number ①	NEMA Type 12 Base Catalog Number ①	NEMA Type 3R Base Catalog Number ①
Low Overload (VT) Enclosed Drives					
3	9.6	5	**SVX003JB1**	**SVX003JB2**	**SVX003JB3**
5	15.2	5	**SVX005JB1**	**SVX005JB2**	**SVX005JB3**
7.5	22	6	**SVX007JB1**	**SVX007JB2**	**SVX007JB3**
10	28	6	**SVX010JB1**	**SVX010JB2**	**SVX010JB3**
15	42	7	**SVX015JB1**	**SVX015JB2**	**SVX015JB3**
20	54	7	**SVX020JB1**	**SVX020JB2**	**SVX020JB3**
25	68	8	**SVX025JA1**	**SVX025JA2**	**SVX025JA3**
30	80	8	**SVX030JA1**	**SVX030JA2**	**SVX030JA3**
40	104	8	**SVX040JA1**	**SVX040JA2**	**SVX040JA3**

480 V, Single-Phase Drives

SVX Enclosed Drives

480 V Single-Phase Drives—Variable Torque (VT)/Low Overload (I_L) Enclosed Drives

hp	Current (A)	Drive Frame Size	NEMA Type 1 Base Catalog Number ①	NEMA Type 12 Base Catalog Number ①	NEMA Type 3R Base Catalog Number ①
Low Overload (VT) Enclosed Drives					
1	2.1	4	**SVX001KB1**	**SVX001KB2**	**SVX001KB3**
3	4.8	4	**SVX003KB1**	**SVX003KB2**	**SVX003KB3**
5	7.6	5	**SVX005KB1**	**SVX005KB2**	**SVX005KB3**
7.5	11	5	**SVX007KB1**	**SVX007KB2**	**SVX007KB3**
10	14	5	**SVX010KB1**	**SVX010KB2**	**SVX010KB3**
15	21	6	**SVX015KB1**	**SVX015KB2**	**SVX015KB3**
20	27	6	**SVX020KB1**	**SVX020KB2**	**SVX020KB3**
25	34	7	**SVX025KB1**	**SVX025KB2**	**SVX025KB3**
30	40	7	**SVX030KB1**	**SVX030KB2**	**SVX030KB3**
40	52	8	**SVX040KB1**	**SVX040KB2**	**SVX040KB3**
50	65	8	**SVX050KA1**	**SVX050KA2**	**SVX050KA3**
60	77	8	**SVX060KA1**	**SVX060KA2**	**SVX060KA3**

Note

① Table is for base catalog number reference only. For complete catalog number selection, see **Page V6-T2-136**.

Enclosure Selection

SVX Drives

Enclosure selection charts are based on physical space limitations only and only to be used as a reference. For actual enclosure sizing, refer to Bid Manager.

Note: Standard enclosure sizing includes dedicated space for a circuit breaker or fusible disconnect, CPT, SPD, heater/thermostat, control relay and terminal blocks.

Standard Enclosure X-Space

Enclosure Size	Frame 4	Frame 5	Frame 6	Frame 7	Frame 8
AX	2	2	2	—	—
BX	4	4	4	4	—
CX	7	7	7	7	7
DX	18	18	18	18	18

Standard Power Options X-Space

Power Options	Frame 4	Frame 5	Frame 6	Frame 7	Frame 8
Isolation fuses	1	1	1	1	1
3% Input reactor	2	2	3	5	6
3% Output reactor	1	1	3	5	6
dV/dt filter	3	3	3	5	6
Output contactor	1	1	1	1	1

Larger Frame Enclosure Sizes

Frame Size	Type 1	Type 12	Type 1 Filtered and Gasketed	Type 3R
Frame 9	Size 5	Size 5	—	Size F
Frame 10 (without power options)	Size 6	—	Size 6	Size F
Frame 10 (with power options)	Size 8	—	Size 8	Size F
Frame 11 (without power options)	Size 8	—	Size 8	Size F
Frame 11 (with power options)	Size 9	—	Size 9	Size F
Frame 12	①	—	①	①

Note: Bypass enclosure sizing includes dedicated space for a MCP, CPT, input contactor, output bypass contactors, overload relay, SPD, heater/thermostat, control relay and terminal blocks.

Bypass Enclosure X-Space

Enclosure Size	Frame 4	Frame 5	Frame 6	Frame 7	Frame 8
AX	0	0	0	—	—
BX	2	2	2	0	—
CX	5	5	5	3	2
DX	16	16	16	14	13

Bypass Power Options X-Space

Power Options	Frame 4	Frame 5	Frame 6	Frame 7	Frame 8
Isolation fuses	1	1	1	1	1
3% Input reactor	2	2	3	5	6
RVSS bypass	2	2	2	3	4
3% Output reactor	1	1	3	5	6
dV/dt filter	3	3	3	5	6

Larger Frame Enclosure Sizes

Frame Size	Type 1	Type 12	Type 1 Filtered and Gasketed	Type 3R
Frame 9	Size 5	Size 5	—	Size F
Frame 10	Size 8	—	Size 8	Size F
Frame 11	Size 9	—	Size 9	Size F
Frame 12	①	—	①	①

Note: Single-phase enclosure sizing includes dedicated space for a capacitor kit, circuit breaker or fusible disconnect, CPT, SPD, heater/thermostat, control relay and terminal blocks.

Single-Phase Enclosure X-Space

Enclosure Size	Frame 4	Frame 5	Frame 6	Frame 7	Frame 8
AX	0	0	—	—	—
BX	2	2	1	1	—
CX	5	5	4	4	4
DX	16	16	15	15	15

Single-Phase Power Options X-Space

Power Options	Frame 4	Frame 5	Frame 6	Frame 7	Frame 8
Isolation fuses	1	1	1	1	1
3% Input reactor	2	2	3	5	6
3% Output reactor	1	1	3	5	6
dV/dt filter	3	3	3	5	6
Output contactor	1	1	1	1	1

Larger Frame Enclosure Sizes

Frame Size	Type 1	Type 12	Type 1A Filtered and Gasketed	Type 3R
Frame 9	Size 5	Size 5	—	Size F
Frame 10	Size 8	—	Size 8	Size F
Frame 11	Size 9	—	Size 9	Size F
Frame 12	①	—	①	①

Note

① Consult factory.

Options

SVX Series Option Board Kits

The SVX Series drives can accommodate a wide selection of expander and adapter option boards to customize the drive for your application needs. The drive's control unit is designed to accept a total of five option boards.

The SVX Series factory installed standard board configuration includes an A9 I/O board and an A2 relay output board, which are installed in slots A and B.

Option Boards

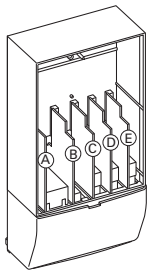

Option Board Kits

Option Kit Description ①	Allowed Slot Locations ②	Field Installed Catalog Number	Factory Installed Option Designator	SVX Ready Programs Basic	Local/ Remote	Standard	MSS	PID	Multi-P.	PFC
Standard I/O Cards										
6 DI, 1 DO, 2 AI, 1 AO, 1 +10 Vdc ref, 2 ext +24 Vdc/EXT +24 Vdc	A	**OPTA9**	—	■	■	■	■	■	■	■
2 RO (NC-NO)	B	**OPTA2**	—	■	■	■	■	■	■	■
Extended I/O Cards										
2 RO, therm	B	**OPTA3**	**A3**	—	■	■	■	■	■	■
Encoder low volt +5 V/15 V/24 V—SPX only	C	**OPTA4**	**A4**	—	■	■	■	■	■	■
Encoder high volt +15 V/24 V—SPX only	C	**OPTA5**	**A5**	—	■	■	■	■	■	■
Double encoder—SPX only	C	**OPTA7**	**A7**	■	■	■	■	■	■	■
6 DI, 1 DO, 2 AI, 1 AO	A	**OPTA8**	**A8**	—	■	■	■	■	■	■
3 DI (encoder 10–24 V), out +15 V/+24 V, 2 DO (pulse+direction)—SPX only	C	**OPTAE**	**AE**	■	■	■	■	■	■	■
6 DI, 1 ext +24 Vdc/EXT +24 Vdc	B, C, **D**, E	**OPTB1**	**B1**	—	—	—	—	—	■	■
1 RO (NC-NO), 1 RO (NO), 1 therm	B, C, **D**, E	**OPTB2**	**B2**	—	—	—	—	—	■	■
1 AI (mA isolated), 2 AO (mA isolated), 1 ext +24 Vdc/EXT +24 Vdc	B, C, **D**, E	**OPTB4**	**B4**	■	■	■	■	■	■	■
3 RO (NO)	B, C, **D**, E	**OPTB5**	**B5**	—	—	—	—	—	■	■
1 ext +24 Vdc/EXT +24 Vdc, 3 Pt100	B, C, **D**, E	**OPTB8**	**B8**	—	—	—	—	—	—	—
1 RO (NO), 5 DI 42–240 Vac input	B, C, **D**, E	**OPTB9**	**B9**	—	—	—	—	—	■	■
Communication Cards										
Modbus ③	D, **E**	**OPTC2**	**C2**	■	■	■	■	■	■	■
Modbus TCP	D, **E**	**OPTCI**	**CI**	■	■	■	■	■	■	■
BACnet	D, **E**	**OPTCJ**	**CJ**	■	■	■	■	■	■	■
EtherNet/IP	D, **E**	**OPTCQ**	**CQ**	■	■	■	■	■	■	■
Johnson Controls N2 ③	D, **E**	**OPTC2**	**CA**	—	—	—	—	—	—	—
PROFIBUS DP	D, **E**	**OPTC3**	**C3**	■	■	■	■	■	■	■
LonWorks	D, **E**	**OPTC4**	**C4**	■	■	■	■	■	■	■
PROFIBUS DP (D9 connector)	D, **E**	**OPTC5**	**C5**	■	■	■	■	■	■	■
CANopen (slave)	D, **E**	**OPTC6**	**C6**	■	■	■	■	■	■	■
DeviceNet	D, **E**	**OPTC7**	**C7**	■	■	■	■	■	■	■
Modbus (D9 type connector)	D, **E**	**OPTC8**	**C8**	■	■	■	■	■	■	■
Adapter—SPX only	D, **E**	**OPTD1**	**D1**	■	■	■	■	■	■	■
Adapter—SPX only	D, **E**	**OPTD2V**	**D2**	■	■	■	■	■	■	■
RS-232 with D9 connection	D, **E**	**OPTD3**	**D3**	■	■	■	■	■	■	■

Notes

① AI = Analog Input; AO = Analog Output, DI = Digital Input, DO = Digital Output, RO = Relay Output
② Option card must be installed in one of the slots listed for that card. Slot indicated in bold is the preferred location.
③ OPTC2 is a multi-protocol option card.

Modbus RTU Network Communications

The Modbus Network Card OPTC2 is used for connecting the SVX Drive as a slave on a Modbus network. The interface is connected by a 9-pin DSUB connector (female) and the baud rate ranges from 300 to 19,200 baud. Other communication parameters include an address range from 1 to 247; a parity of None, Odd or Even; and the stop bit is 1.

PROFIBUS Network Communications

The PROFIBUS Network Card OPTC3 is used for connecting the SVX Drive as a slave on a PROFIBUS-DP network. The interface is connected by a 9-pin DSUB connector (female). The baud rates range from 9.6 Kbaud to 12 Mbaud, and the addresses range from 1 to 127.

LonWorks Network Communications

The LonWorks Network Card OPTC4 is used for connecting the SVX Drive on a LonWorks network. This interface uses Standard Network Variable Types (SNVT) as data types. The channel connection is achieved using a FTT-10 A Free Topology transceiver via a single twisted transfer cable. The communication speed with LonWorks is 78 kBits/s.

CANopen (Slave) Communications

The CANopen (Slave) Network Card OPTC6 is used for connecting the SVX Drive to a host system. According to ISO11898 standard cables to be chosen for CANbus should have a nominal impedance of 120 ohms, and specific line delay of nominal 5 nS/m. 120 ohms line termination resistors required for installation.

DeviceNet Network Communications

The DeviceNet Network Card OPTC7 is used for connecting the SVX Drive on a DeviceNet Network. It includes a 5.08 mm pluggable connector. Transfer method is via CAN using a two-wire twisted shielded cable with two-wire bus power cable and drain. The baud rates used for communication include 125 Kbaud, 250 Kbaud and 500 Kbaud.

Johnson Controls Metasys N2 Network Communications

The OPTC2 fieldbus board provides communication between the SVX Drive and a Johnson Controls Metasys™ N2 network. With this connection, the drive can be controlled, monitored and programmed from the Metasys system. The N2 fieldbus is available as a factory installed option and as a field installable kit.

Modbus/TCP Network Communications

The Modbus/TCP Network Card OPTCI is used for connecting the SVX Drive to Ethernet networks utilizing Modbus protocol. It includes an RJ-45 pluggable connector. This interface provides a selection of standard and custom register values to communicate drive parameters. The board supports 10 Mbps and 100 Mbps communication speeds. The IP address of the board is configurable over Ethernet using a supplied software tool.

BACnet Network Communications

The BACnet Network Card OPTCJ is used for connecting the SVX Drive to BACnet networks. It includes a 5.08 mm pluggable connector. Data transfer is Master-Slave/Token Passing (MS/TP) RS-485. This interface uses a collection of 30 Binary Value Objects (BVOs) and 35 Analog Value Objects (AVOs) to communicate drive parameters. The card supports 9.6, 19.2 and 38.4 Kbaud communication speeds and supports network addresses 1–127.

EtherNet/IP Network Communications

The EtherNet/IP Network Card OPTCK is used for connecting the SVX Drive to Ethernet/Industrial Protocol networks. It includes an RJ-45 pluggable connector. The interface uses CIP objects to communicate drive parameters (CIP is "Common Industrial Protocol", the same protocol used by DeviceNet). The board supports 10 Mbps and 100 Mbps communication speeds. The IP address of the board is configurable by Static, BOOTP and DHCP methods.

Input Power Options

Option	Description
HMCP Disconnect	The HMCP motor protection circuit breaker uses an electronic trip unit to provide typical motor overload relay functionality and short-circuit protection against potential phase-to-phase or phase-to-ground faults.
Circuit Breaker	Utilizes a circuit breaker to provide a means of short-circuit protection for the power cables between it and the drive, and protection from high-level ground faults on the power cable. Allows a convenient means of disconnecting the drive from the line, and the operating mechanism can be padlocked in the OFF position. This is factory mounted in the enclosure.
Isolation Fusing	Provides high-level fault protection of the drive input power circuit from the load side of the fuses to the input side of the power transistors. This option consists of three 200 kA fuses that are factory mounted in the enclosure.
3% Input Reactor	The input reactor is a three-phase series inductance on the line side of an AFD. It is used to provide a reduction in voltage and current harmonics. It also provides increased input protection for AFD and its semiconductors from line transients.
SPD	Provides a UL 1449 surge protection device (SPD) rated for 40 kA/ph that is connected to the line side terminals.
Fused Disconnect	Utilizes fusing to provide a means of short-circuit protection for the power cables between it and the drive, and protection from high-level ground faults on the power cable. Allows a convenient means of disconnecting the drive from the line, and the operating mechanism can be padlocked in the OFF position. This is factory mounted in the enclosure.

Bypass Options

Option	Description
Manual HOA Bypass	Provides a three-position selector switch that allows the user to select either a HAND or AUTO mode of operation. HAND mode is defaulted keypad operation, and AUTO mode is defaulted to control from an external terminal source. These modes of operation can be configured via programming to allow for alternate combinations of start and speed sources. Start and speed sources include keypad, I/O and fieldbus.
Manual HOA RVSS Bypass	This option adds a reduced voltage soft starter to bypass assembly for soft starting in bypass mode.

Output Power Options

Option	Description
Output Contactor	Provides a means for positive disconnection of the drive output from the motor terminals. The contactor coil is controlled by the drive's run or permissive logic. NC and NO auxiliary contacts rated at 10 A, 600 Vac are provided for customer use. This option includes a low VA 115 Vac fused control power transformer and is factory mounted in the enclosure.
3% Output Reactor	The output reactor is a three-phase series inductance on the load side of a VFD. It is used to reduce transient voltage (dv/dt) and peak voltages at the motor terminals. A 3% output filter is recommended for motor cable lengths up to 300 ft (10 m).
dV/dt Filter	Used to reduce the transient voltage (dV/dt) at the motor terminals. Recommended for motor cable lengths over 300 ft (10 m) and up to 1000 ft (304.8 m). This option is mounted in the enclosure.

Control Options

Option	Description
Speed Pot	Provides the ability to adjust the frequency reference using a door-mounted potentiometer. This option uses the 10 Vdc reference to generate a 0–10 V signal at the analog voltage input signal terminal. When the HOA bypass option is added, the speed is controlled when the HOA switch is in the HAND position. Without the HOA bypass option, a two-position switch (labeled local/remote) is provided on the keypad to select speed reference from the speed potentiometer or a remote speed signal.
HOA Switch	Provides a three-position selector switch that allows the user to select either a HAND or AUTO mode of operation. HAND mode is defaulted to keypad operation, and AUTO mode is defaulted to control from an external terminal source. These modes of operation can be configured via drive programming to allow for alternate combinations of start and speed sources. Start and speed sources include Keypad, I/O and fieldbus.
Start-Stop Pushbutton	Provides door-mounted START and STOP pushbuttons for either bypass or non-bypass configurations.

Light Options

Option	Description
Non-Bypass Light Kit—Power On, Run, Fault	Provides a white POWER ON light that indicates power to the enclosed cabinet, a green RUN light that indicates the drive is running and a red FAULT light that indicates a drive fault has occurred.
Bypass Light Kit—On, VFD Run, Fault, Bypass Run	Provides a white POWER ON light that indicates power to the enclosed cabinet, a green RUN light that indicates the drive is running, a red FAULT light that indicates a drive fault has occurred and an amber light that indicates when the motor is running in Bypass mode.

Enclosure Options

Option	Description
Floor Stand 12 in	Converts a normally wall-mounted enclosure to a floor-standing enclosure with a height of 12 in (304.8 mm).
Floor Stand 22 in	Converts a normally wall-mounted enclosure to a floor-standing enclosure with a height of 22 in (558.8 mm).

Enclosed Drive Options

Brake Chopper Options

The brake chopper circuit option is used for applications that require dynamic braking. Dynamic braking resistors are not included with drive purchase. Consult **Page V6-T2-106** for dynamic braking resistors which are supplied separately. Resistors are not UL Listed.

For brake chopper circuit selection and adder—NEMA Type 1/IP21, NEMA Type 12/IP54, consult the factory

Technical Data and Specifications

SVX Enclosed Drives

Description	Specification
Primary Design Features	
45–66 Hz input frequency	Standard
Output: AC volts maximum	Input voltage base
Output frequency range	0–320 Hz
Initial output current (I_H)	250% for 2 seconds
Overload (1 minute [I_H/I_L])	150%/110%
Enclosure space heater	Optional
Oversize enclosure	Standard
Output contactor	Optional
Bypass motor starter	Optional
Listings	UL, cUL
Protection Features	
Incoming line fuses	Optional
AC input circuit disconnect	Optional
Line reactors (3%)	Standard
Phase rotation insensitive	Standard
EMI filter	Standard
Input phase loss protection	Standard
Input overvoltage protection	Standard
Line surge protection	Optional
Output short-circuit protection	Standard
Output ground fault protection	Standard
Output phase protection	Standard
Overtemperature protection	Standard
DC overvoltage protection	Standard
Drive overload protection	Standard
Motor overload protection	Standard
Programmer software	Optional
Local/remote keypad	Standard
Keypad lockout	Standard
Fault alarm output	Standard
Built-in diagnostics	Standard

Description	Specification
Input/Output Interface Features	
Setup adjustment provisions	
Remote keypad/display	Standard
Personal computer	Standard
Operator control provisions	
Drive mounted keypad/display	Standard
Remote keypad/display	Standard
Conventional control elements	Standard
Serial communications	Optional
115 Vac control circuit	Optional
Speed setting inputs	
Keypad	Standard
0–10 Vdc potentiometer/voltage signal	Standard
4–20 mA Isolated	Configurable
4–20 mA Differential	Configurable
Analog outputs	
Speed/frequency	Standard
Torque/load/current	Programmable
Motor voltage	Programmable
Kilowatts	Programmable
0–10 Vdc signals	Configurable w/jumpers
4–20 mA DC signals	Standard
Isolated signals	Optional
Discrete outputs	
Fault alarm	Standard
Drive running	Standard
Drive at set speed	Programmable
Optional parameters	14
Dry contacts	1 (2 relays Form C)
Open collector outputs	1
Additional discrete outputs	Optional
Communications	
RS-232	Standard
RS-422/485	Optional
DeviceNet™	Optional
Modbus RTU	Optional
CANopen (slave)	Optional
PROFIBUS-DP	Optional
Lonworks®	Optional
Johnson Controls Metasys™ N2	Optional
EtherNet/IP	Optional
Modbus TCP	Optional
BACnet	Optional

SVX Enclosed Drives, continued

Description	Specification
Performance Features	
Sensorless vector control	Standard
Volts/hertz control	Standard
IR and slip compensation	Standard
Electronic reversing	Standard
Dynamic braking	Optional ①
DC braking	Standard
PID setpoint controller	Programmable
Critical speed lockout	Standard
Current (torque) limit	Standard
Adjustable acceleration/deceleration	Standard
Linear or S curve accel/decel	Standard
Jog at preset speed	Standard
Thread/preset speeds	7 Standard, 15 Optional
Automatic restart	Selectable
Coasting motor start	Standard
Coast or ramp stop selection	Standard
Elapsed time meter	Optional
Carrier frequency adjustment	1–16 kHz
Standard Conditions for Application and Service	
Operating ambient temperature	0 to 40 °C
Storage temperature	–40 to 60 °C
Humidity (maximum), non-condensing	95%
Altitude (maximum without derate)	3300 ft (1000 m)
Line voltage variation	+10/–15%
Line frequency variation	45–66 Hz
Efficiency	>96%
Power factor (displacement)	>0.94

Standard I/O Specifications

Description	Specification
Six–digital input programmable	24 V: "0" ≤10 V, "1" ≥18V,R_i >5 kohms
Two–analog input configurable w/jumpers	Voltage: 0–±10 V, R_i >200 kohms Current: 0 (4)–20 mA, R_i = 250 ohms
Two–digital output programmable	Form C relays 250 Vac 30 Vdc 2 amp resistive
One–analog output programmable configurable w/jumper	0–20 mA, R_L max. 500 ohms 10 bits ±2%
One digital output programmable	Open collector 48 Vdc 50 mA

I/O Specifications for Control/Communication Options

Description	Specification
Analog voltage, input	0–±10 V, R_i ≥200 kohms
Analog current, input	0 (4)–20 mA, R_i = 250 ohms
Digital input	24 V: "0" ≤10 V, "1" ≥18V, R_i >5 kohms
Auxiliary voltage	24 V (±20%), max. 50 mA
Reference voltage	10 V ±3%, max. 10 mA
Analog current, output	0 (4)–20 mA, R_L = 500 kohms resolution 10 bit, accuracy ≤±2%
Analog voltage, output	0 (2)–10 V, R_L ≥1 kohms, resolution 10 bit, accuracy ≤±2%
Relay output	
Maximum switching voltage	300 Vdc, 250 Vac
Maximum switching load	8 A/24 Vdc, 0.4 A/300 Vdc, 2 kVA/250 Vac
Maximum continuous load	2 A rms
Thermistor input	R_{trip} = 4.7 kohms
Encoder input	24 V: "0" ≤10 V, "1" ≥18V, R_i = 2.2 kohms 5 V: "0" ≤2V, "1" ≥3V, R_i = 330 ohms

Note

① Some horsepower units include dynamic braking chopper as standard—refer to individual drive sections.

Dimensions

Approximate Dimensions in Inches (mm)

AX Box Type 1

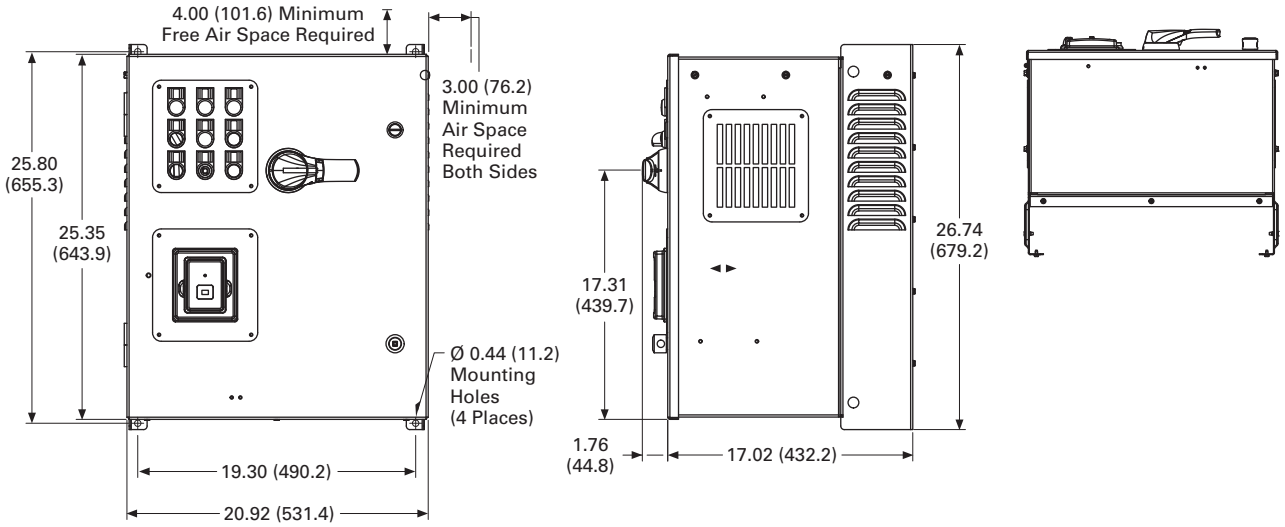

AX Box Type 1—12 Inch Floor Stands

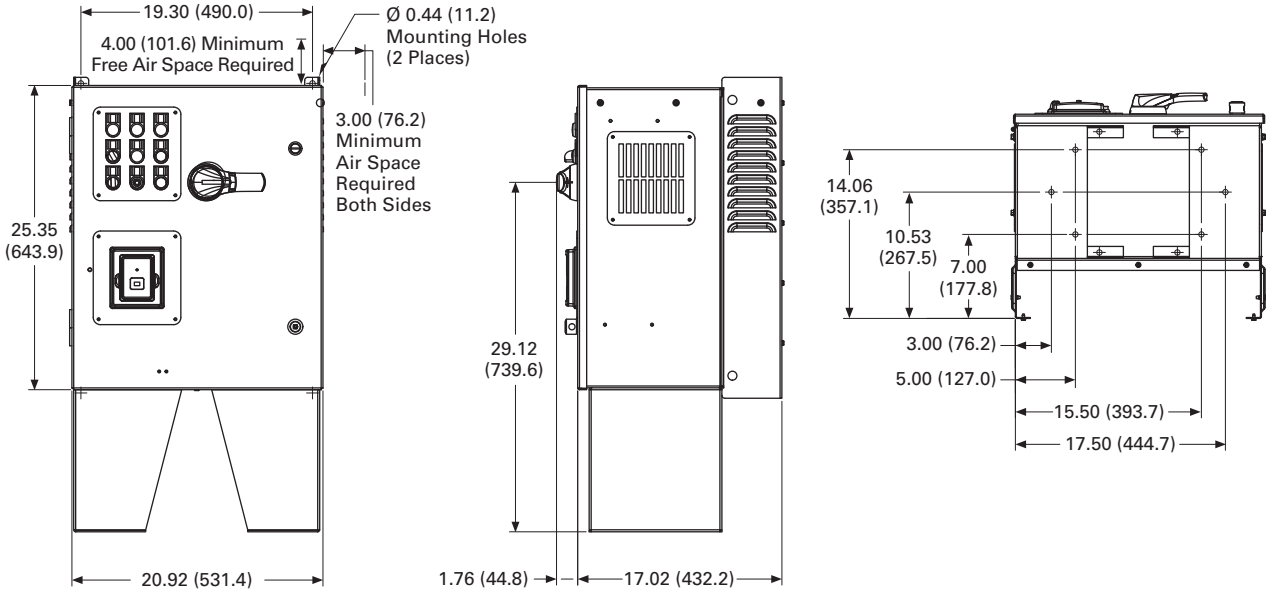

Approximate Dimensions in Inches (mm)

AX Box Type 1—22 Inch Floor Stands

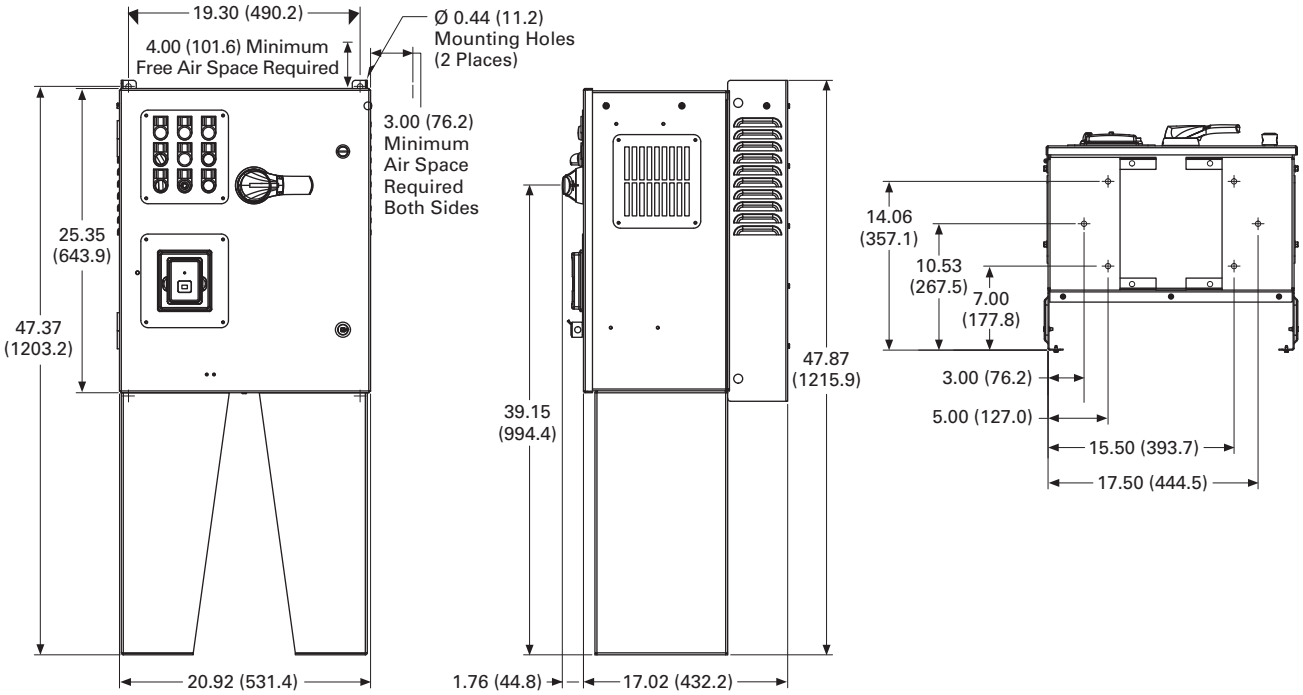

AX Box Type 12

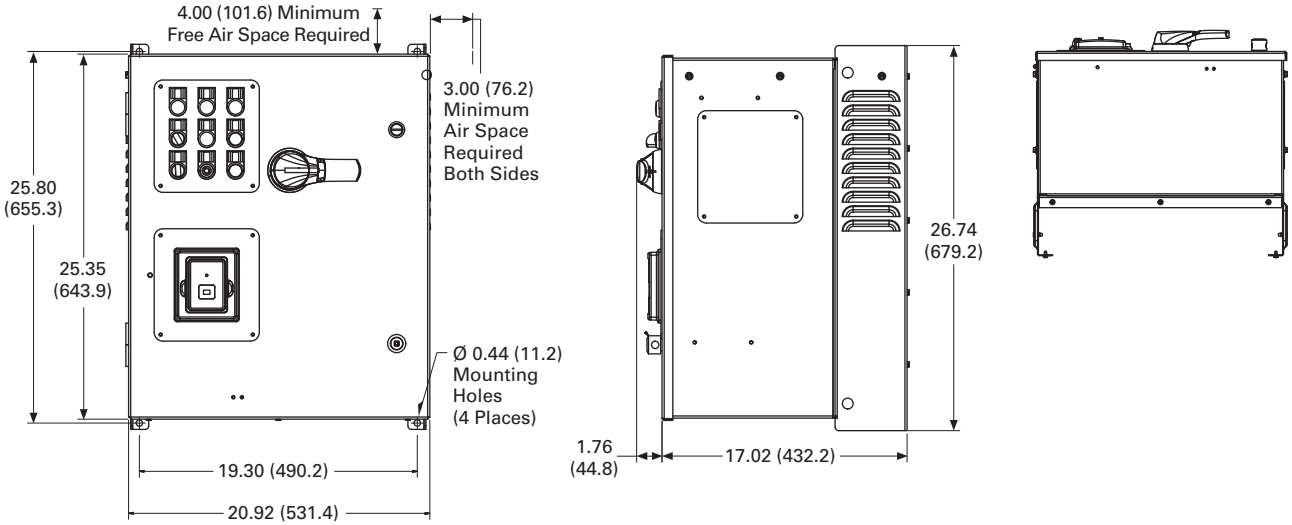

Approximate Dimensions in Inches (mm)

AX Box Type 12—12 Inch Floor Stands

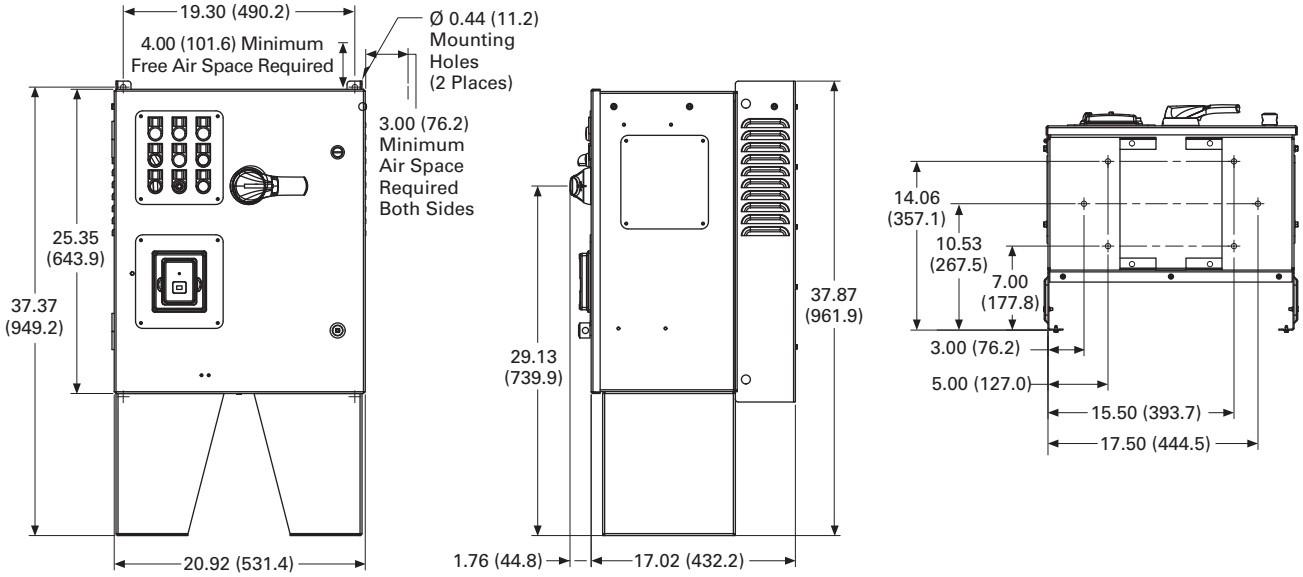

AX Box Type 12—22 Inch Floor Stands

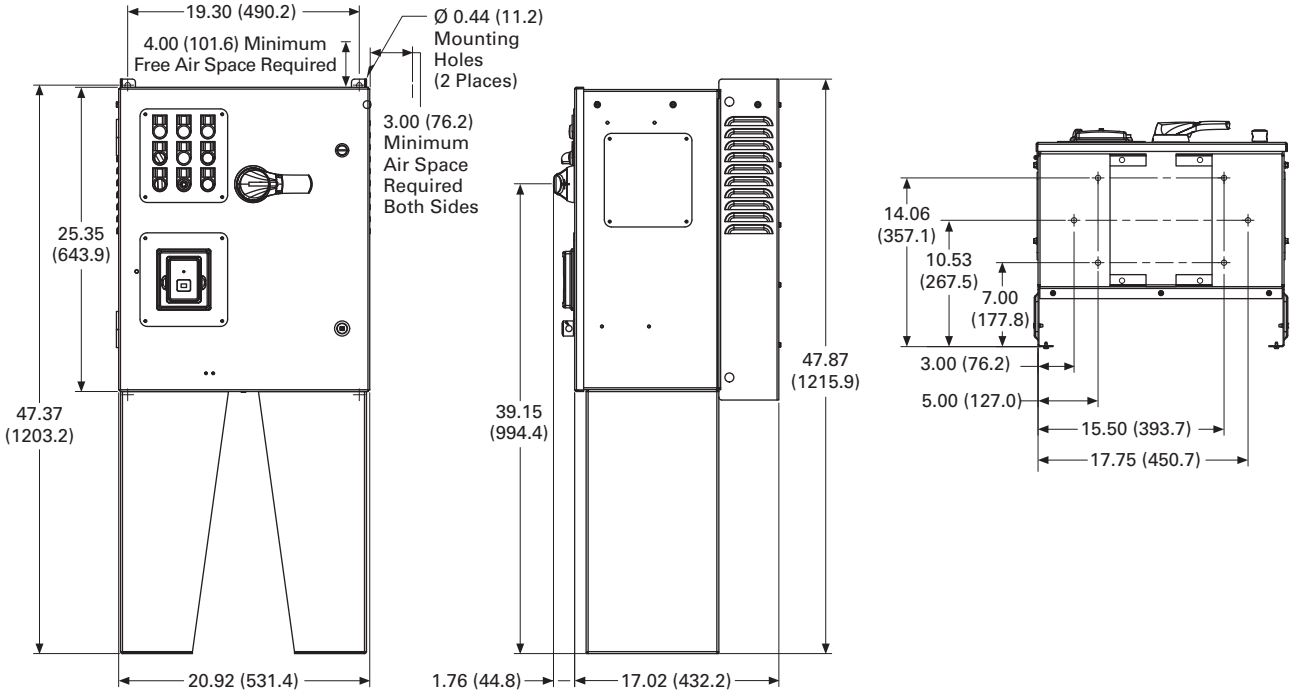

Approximate Dimensions in Inches (mm)

AX Box Type 3R

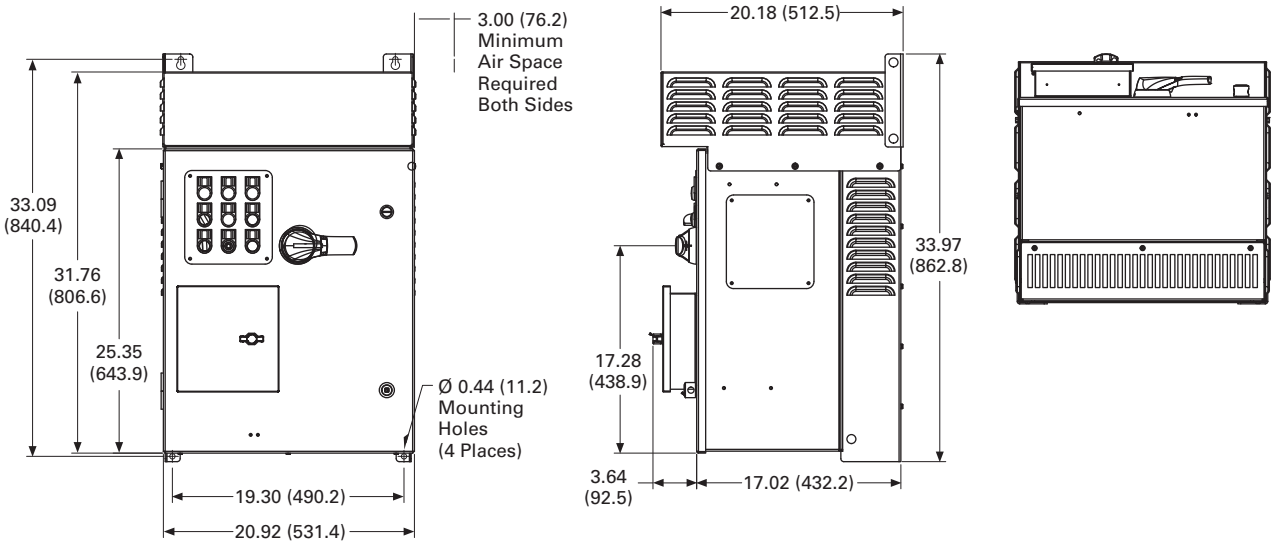

AX Box Type 3R—12 Inch Floor Stands

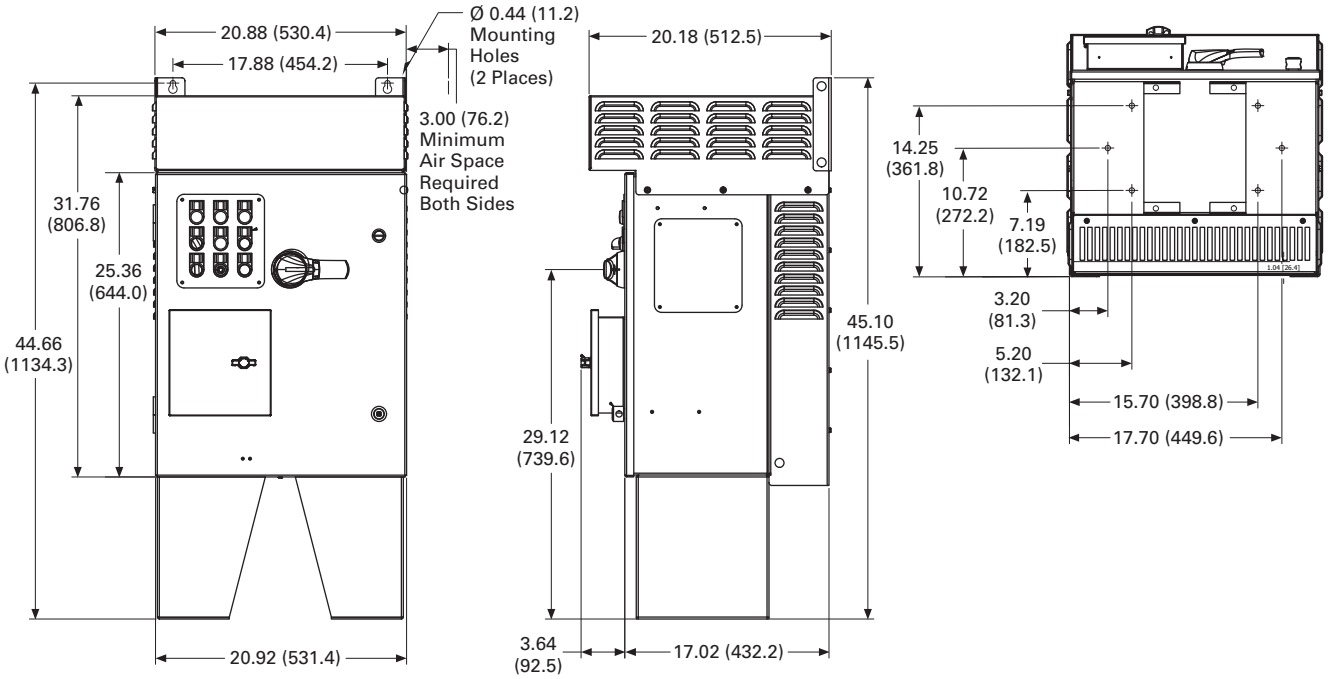

Approximate Dimensions in Inches (mm)

AX Box Type 3R—22 Inch Floor Stands

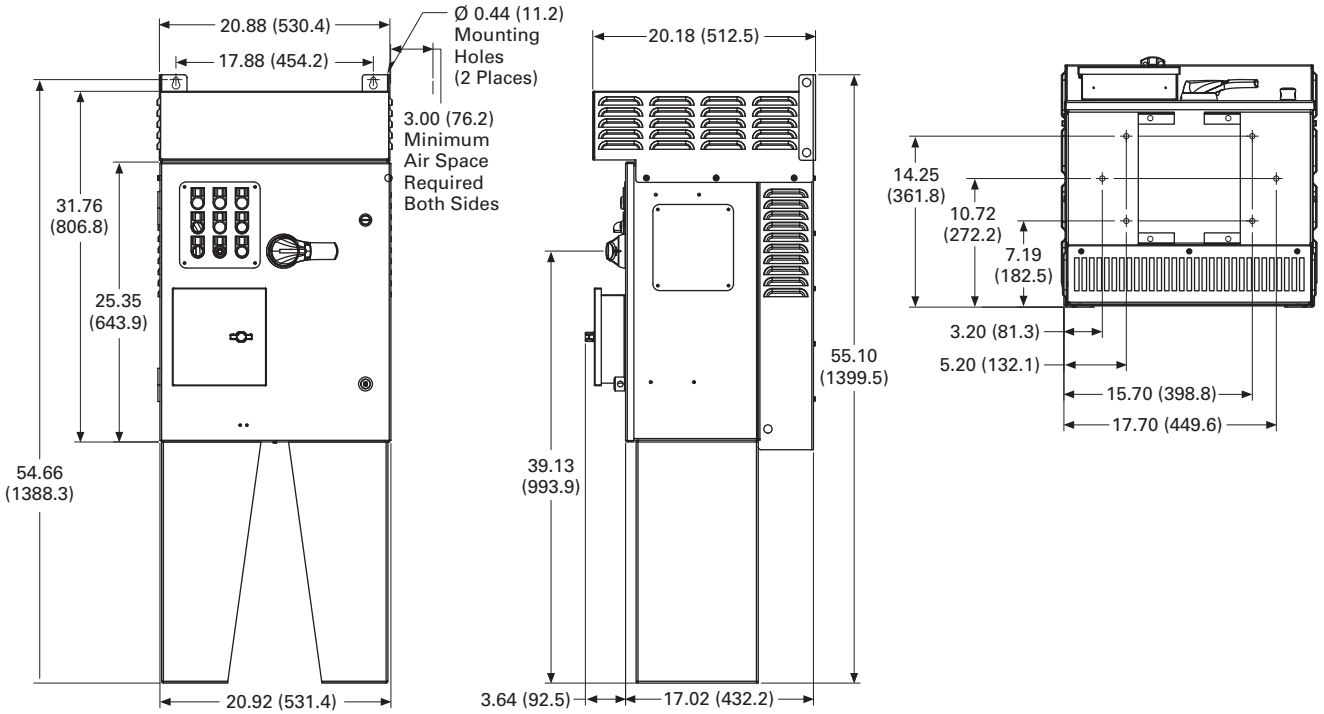

BX Box Type 1

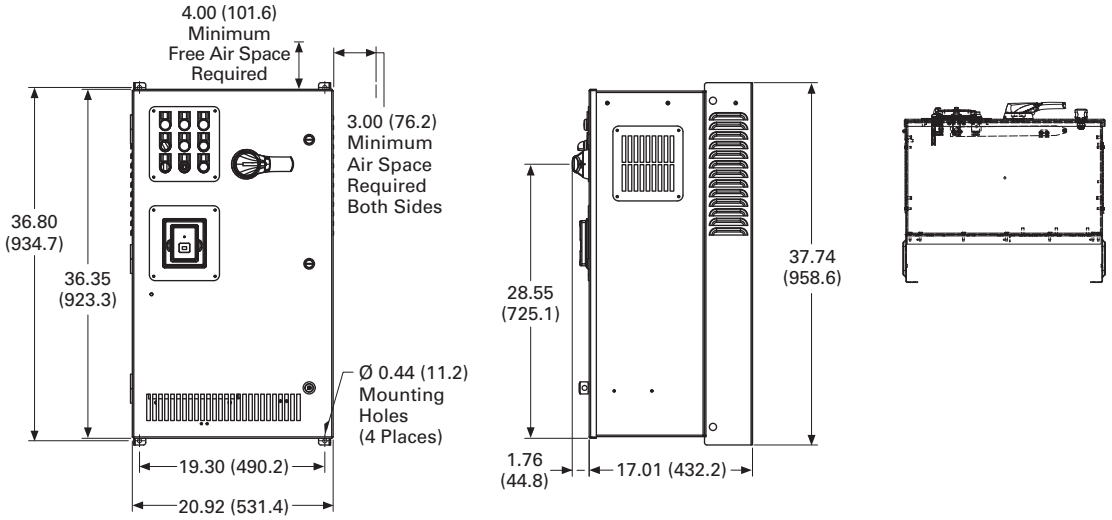

Approximate Dimensions in Inches (mm)

BX Box Type 1—12 Inch Floor Stands

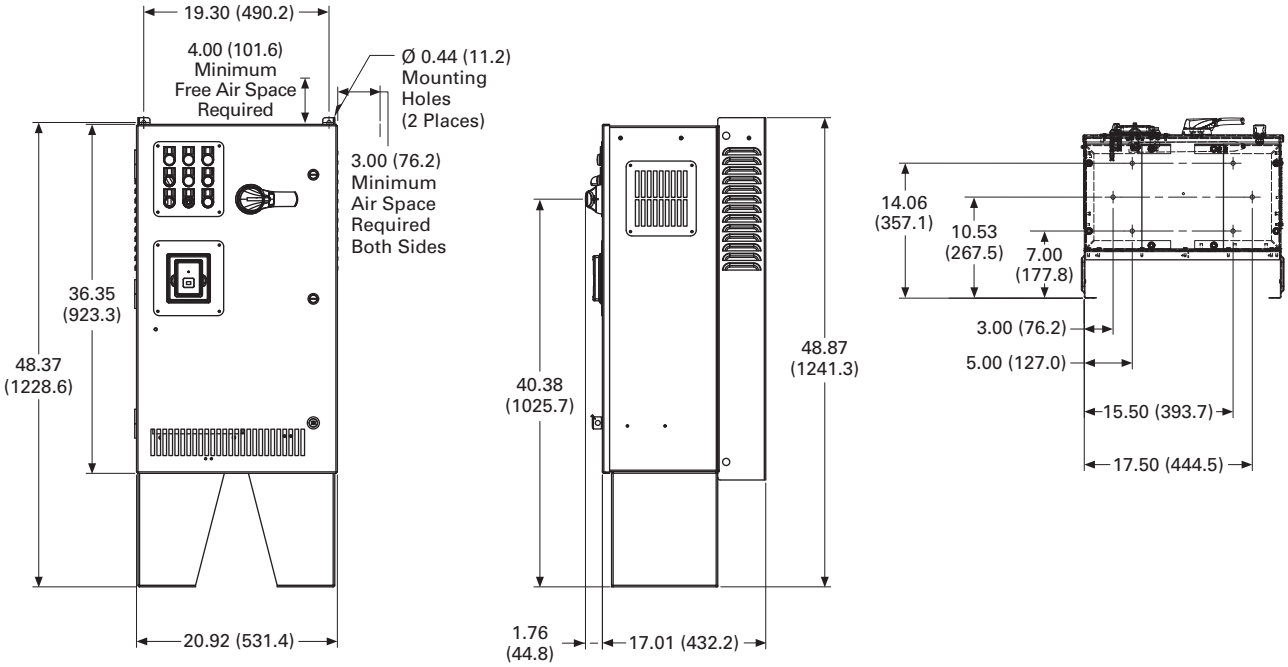

BX Box Type 1—22 Inch Floor Stands

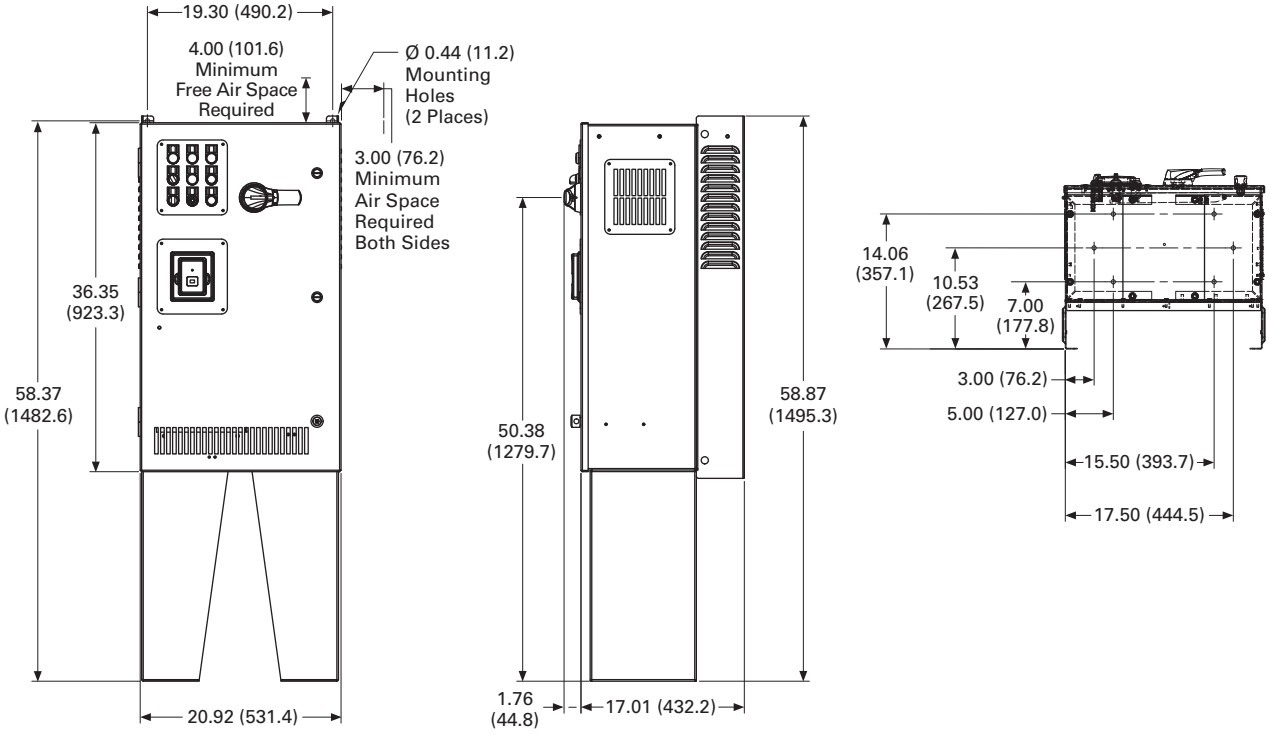

Approximate Dimensions in Inches (mm)

BX Box Type 12

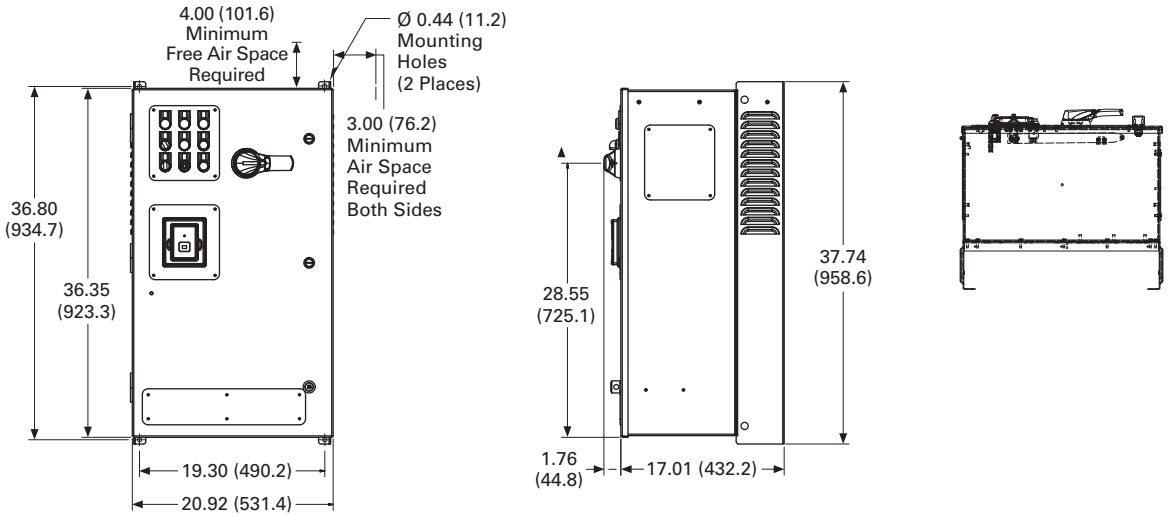

BX Box Type 12—12 Inch Floor Stands

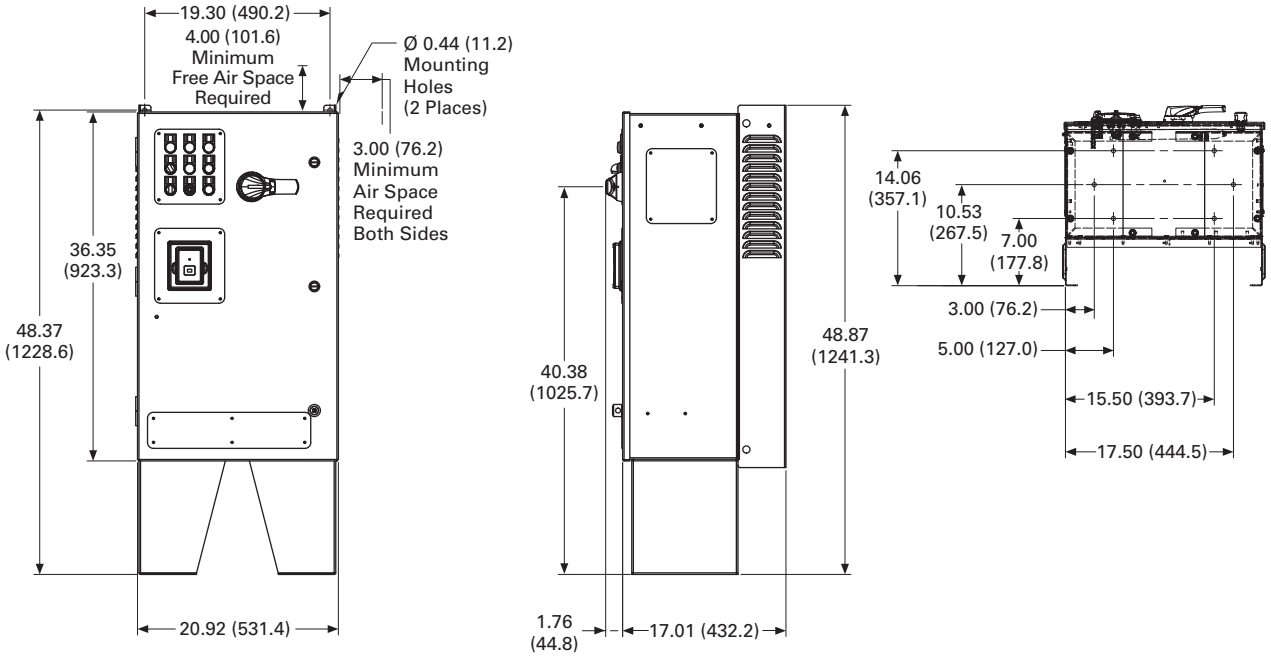

Approximate Dimensions in Inches (mm)

BX Box Type 12—22 Inch Floor Stands

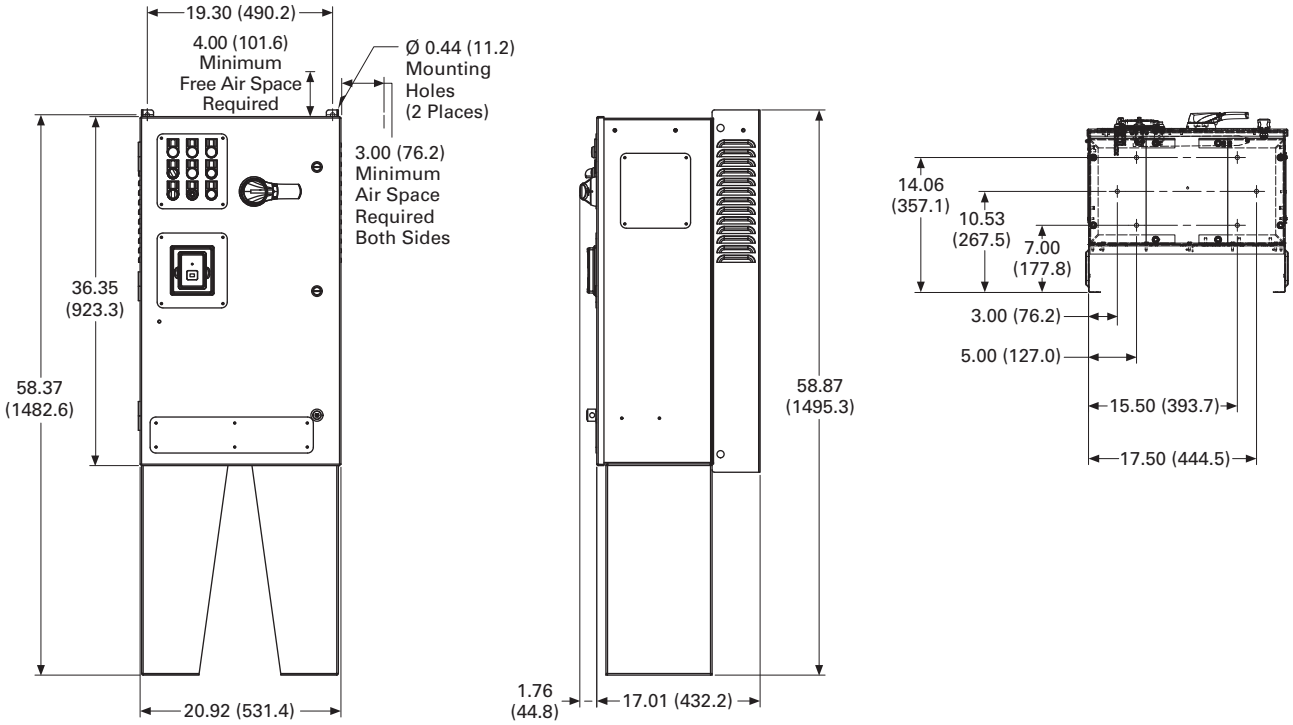

BX Box Type 3R

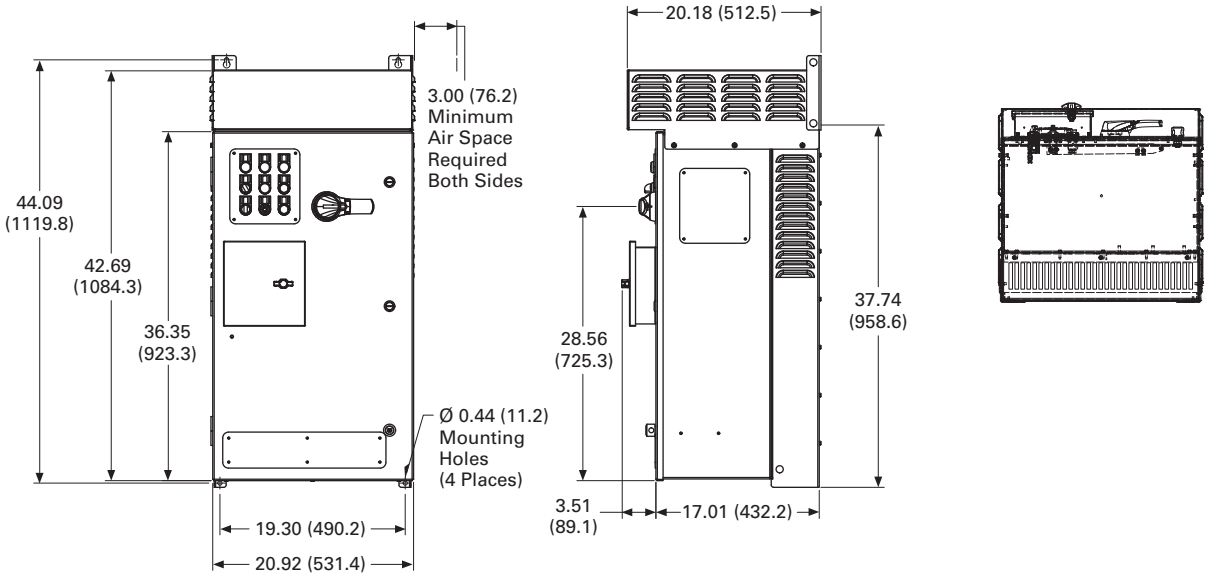

Approximate Dimensions in Inches (mm)

BX Box Type 3R—12 Inch Floor Stands

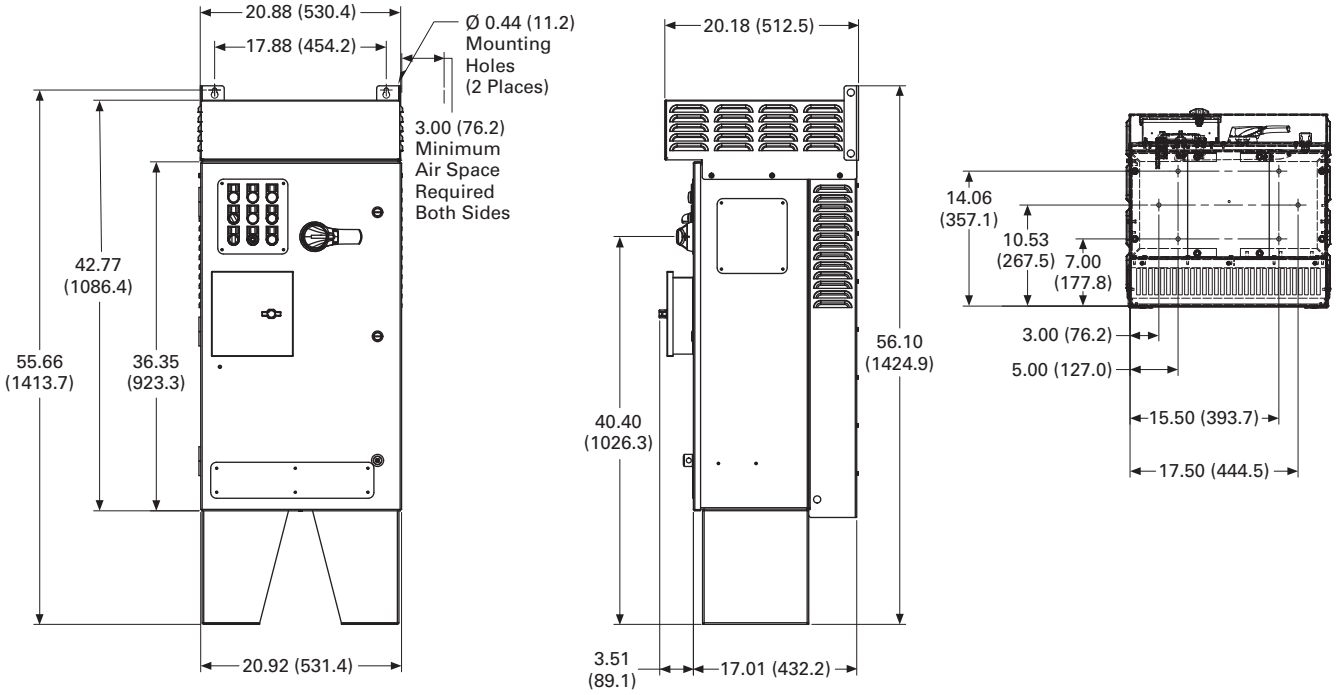

BX Box Type 3R—22 Inch Floor Stands

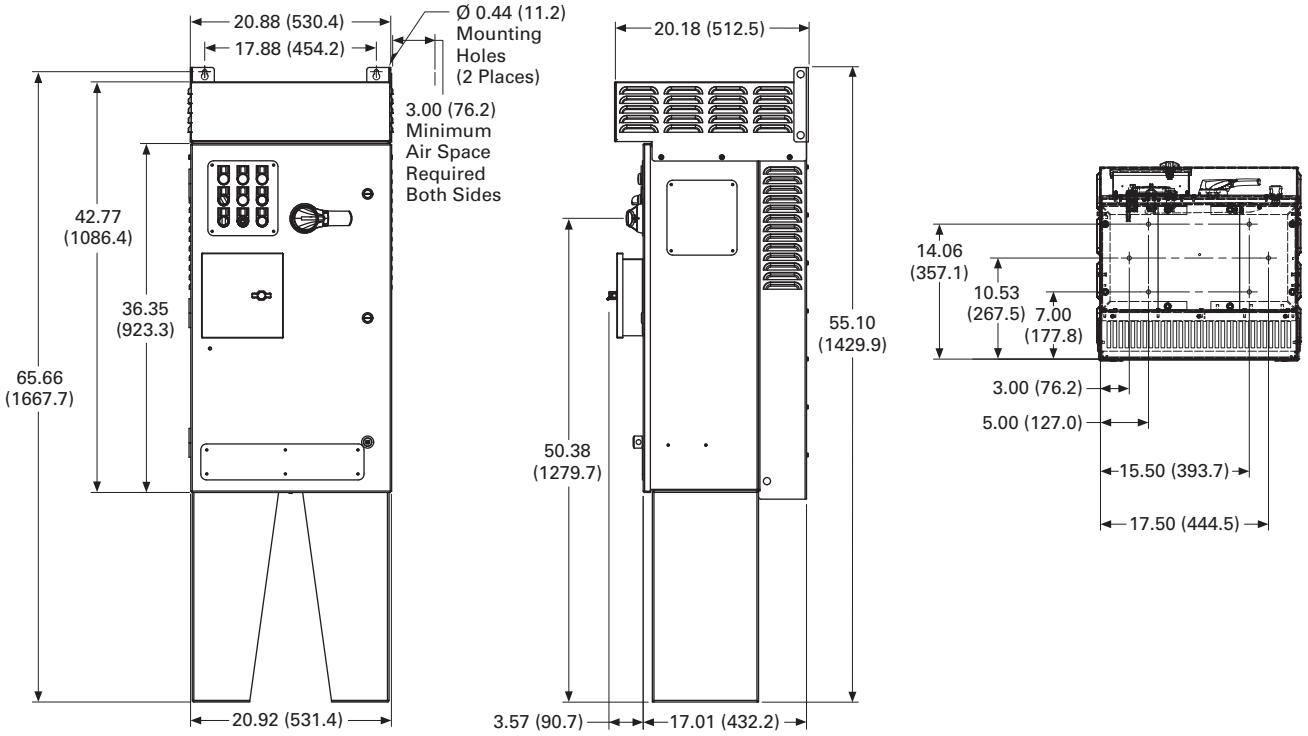

Approximate Dimensions in Inches (mm)

CX Box Type 1

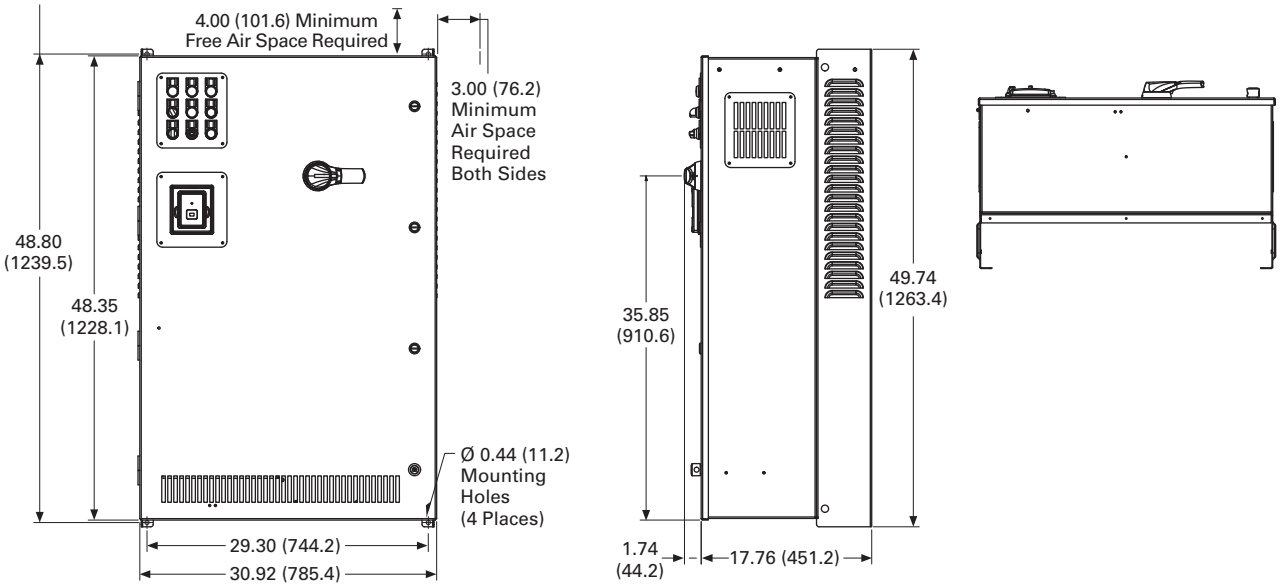

CX Box Type 1—12 Inch Floor Stands

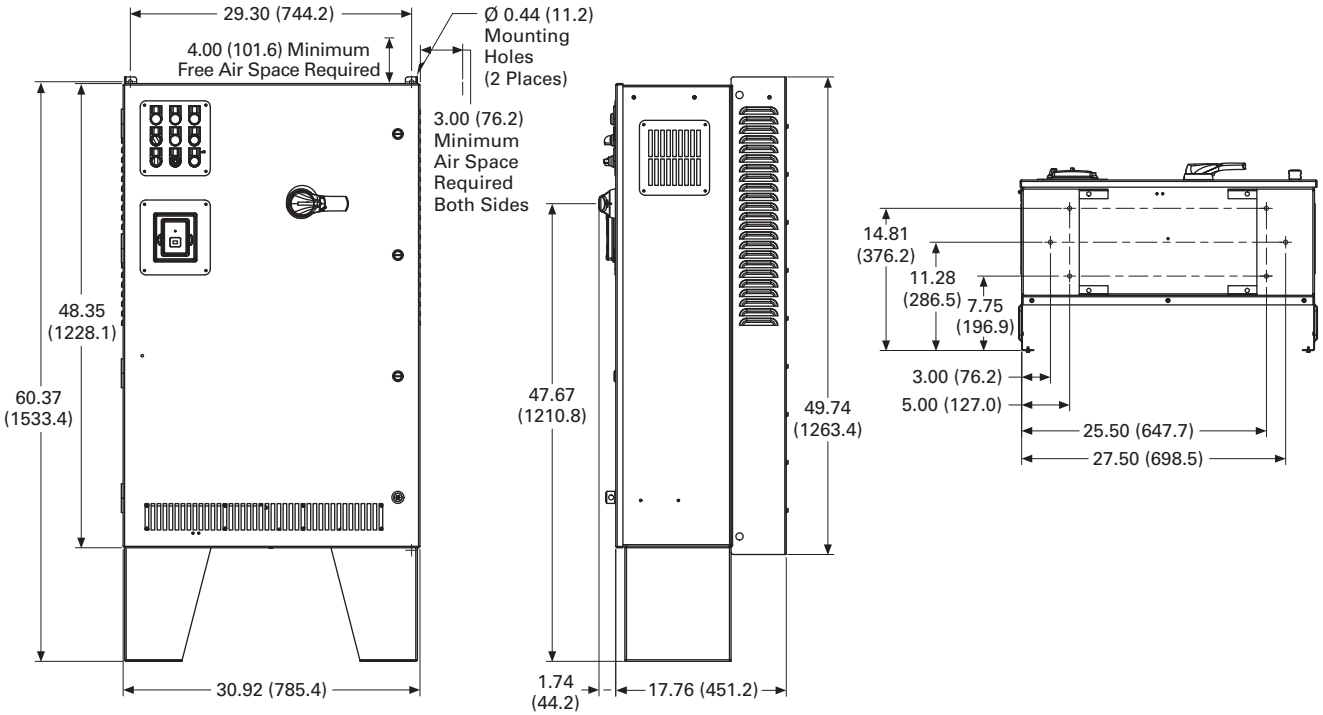

Approximate Dimensions in Inches (mm)

CX Box Type 1—22 Inch Floor Stands

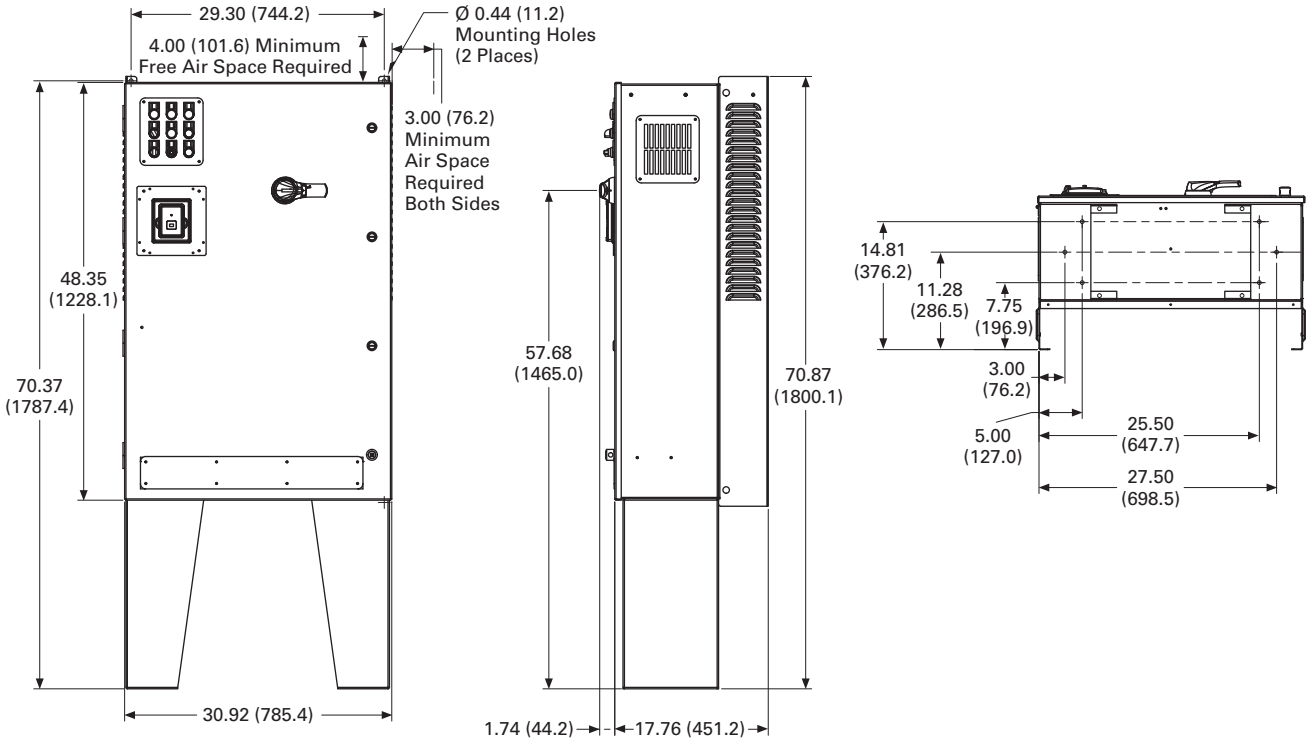

CX Box Type 12

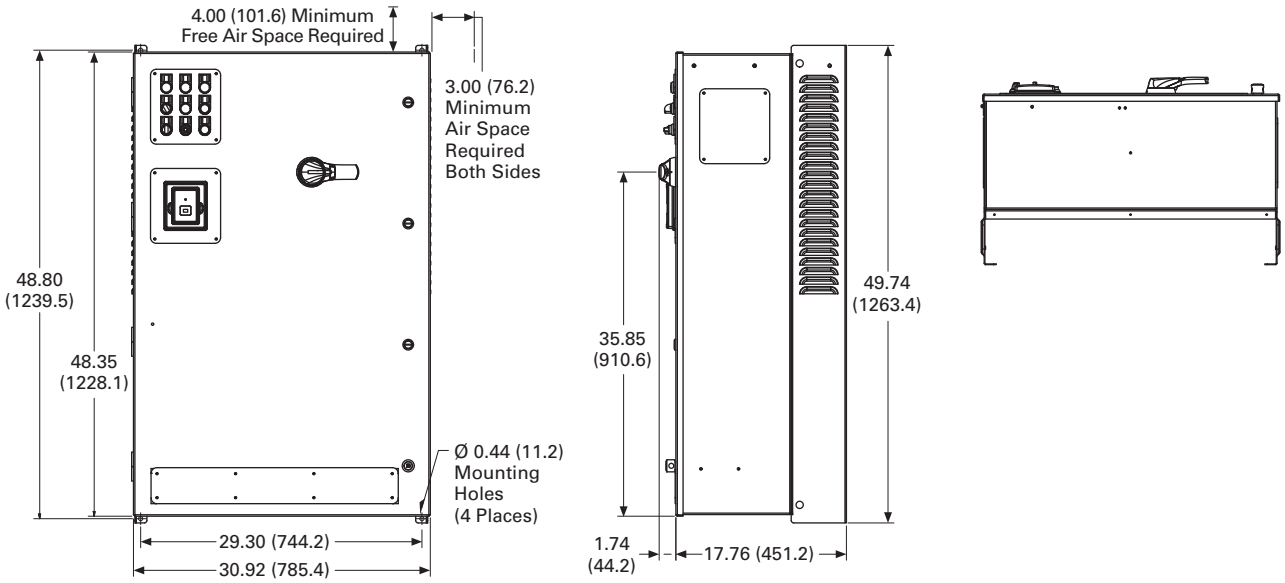

Approximate Dimensions in Inches (mm)

CX Box Type 12—12 Inch Floor Stands

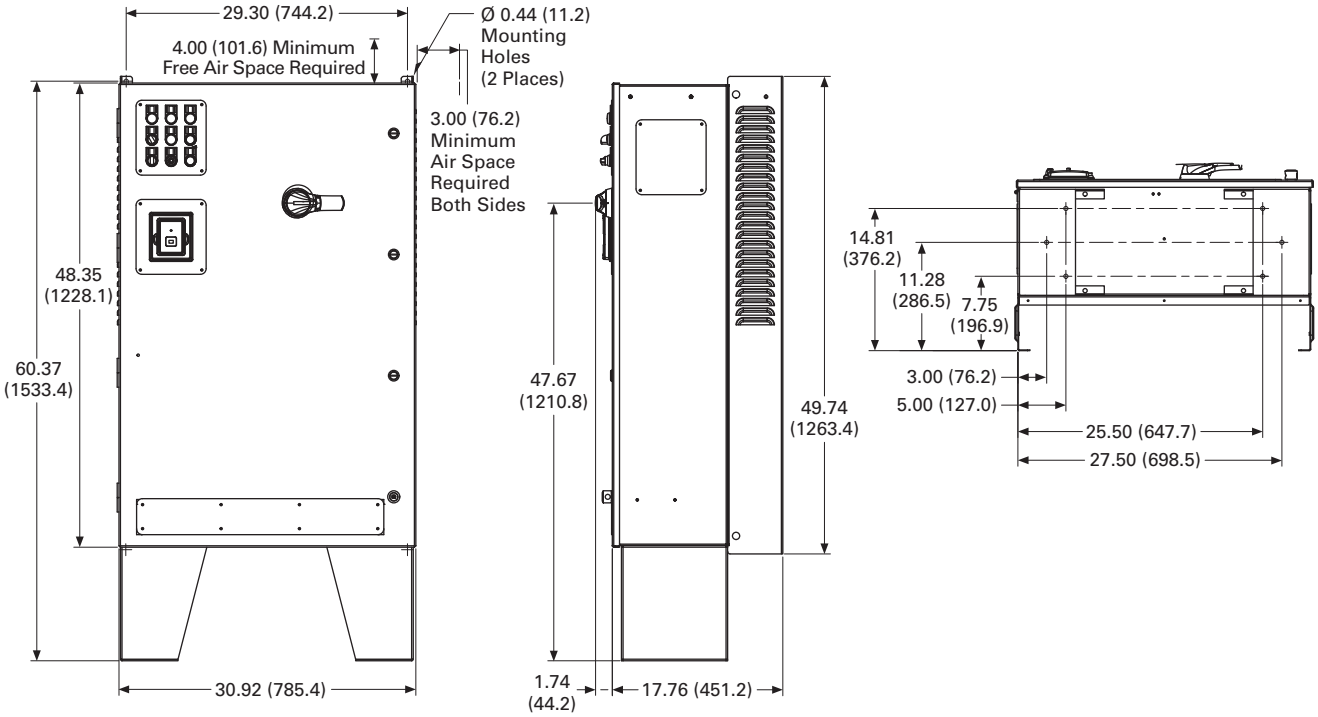

CX Box Type 12—22 Inch Floor Stands

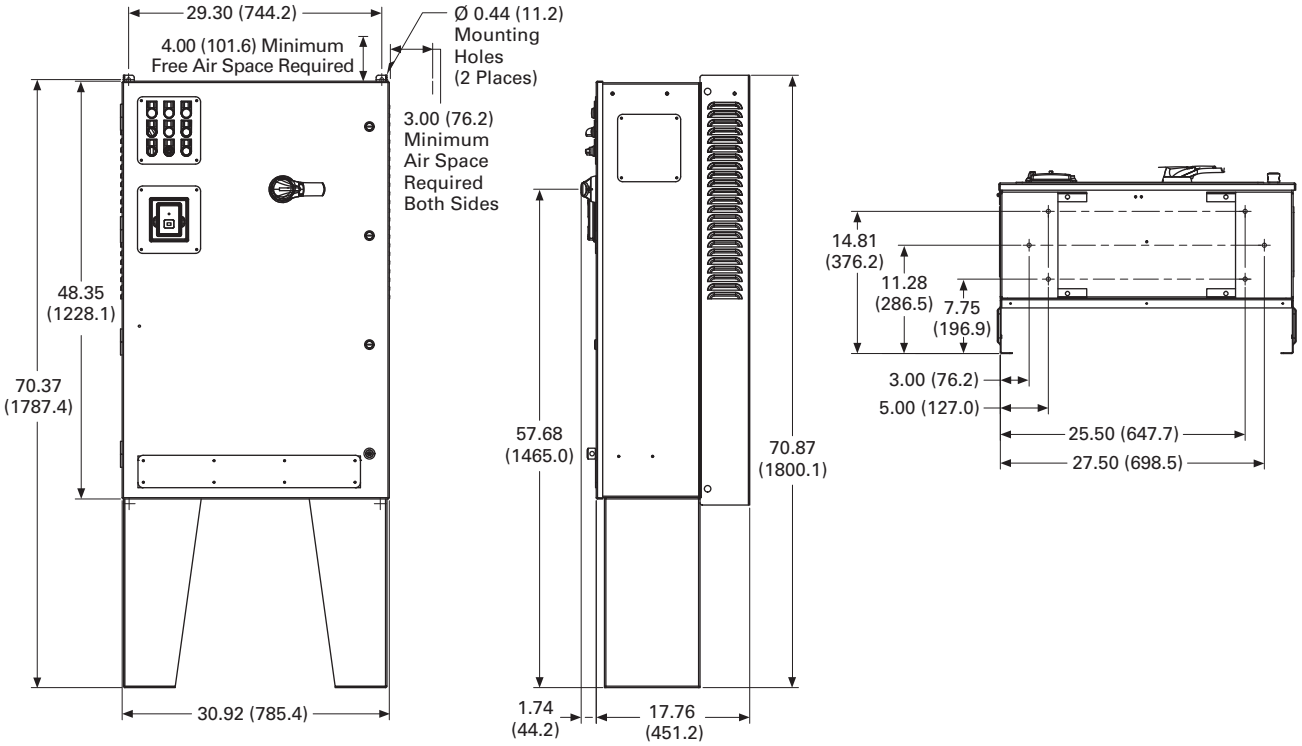

Approximate Dimensions in Inches (mm)

CX Box Type 3R

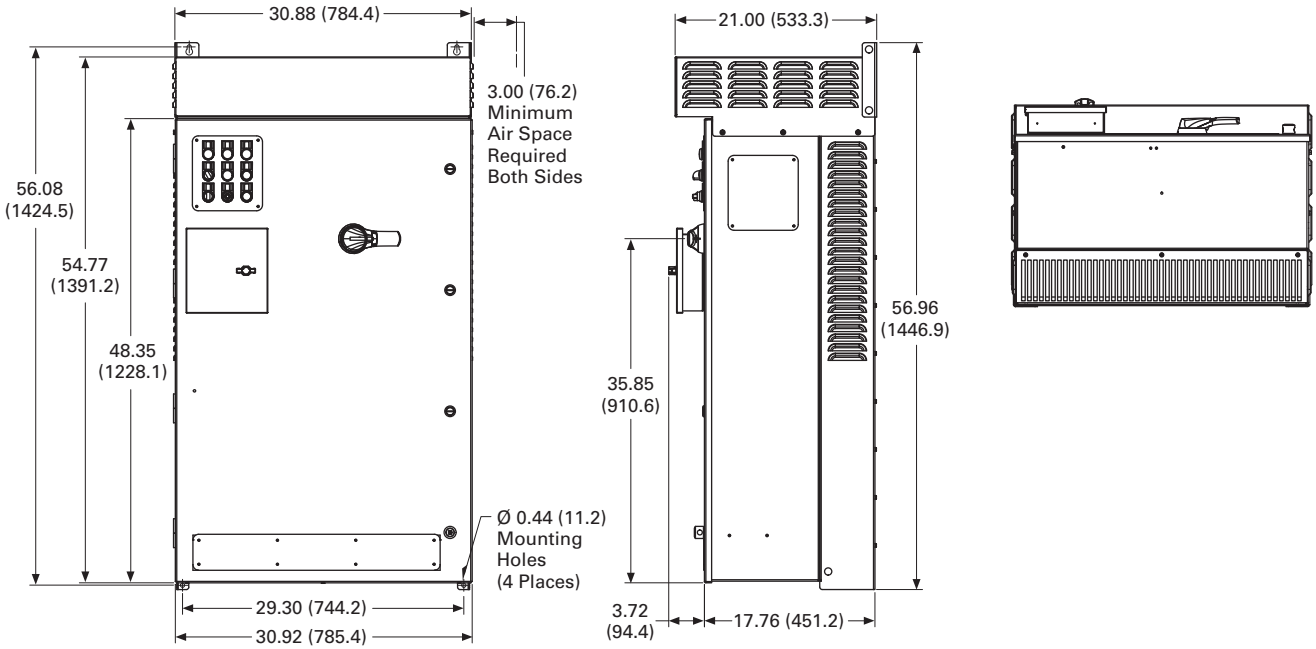

CX Box Type 3R—12 Inch Floor Stands

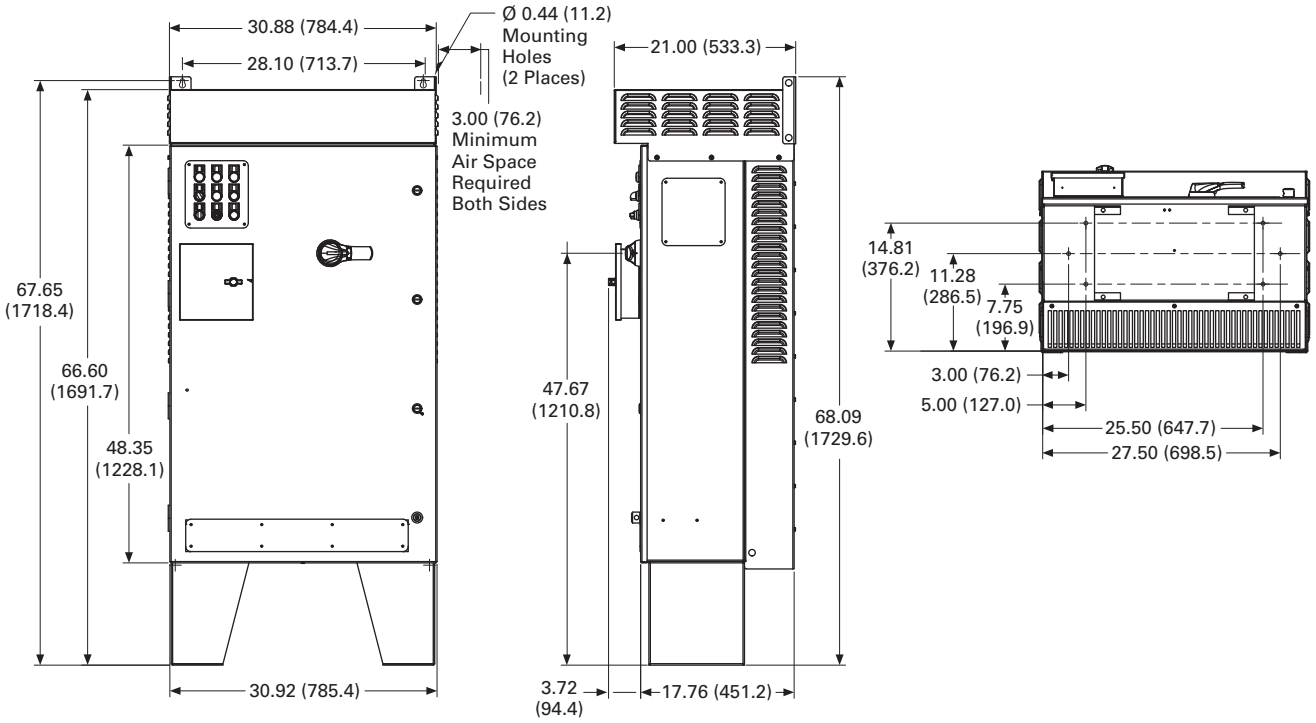

Approximate Dimensions in Inches (mm)

CX Box Type 3R—22 Inch Floor Stands

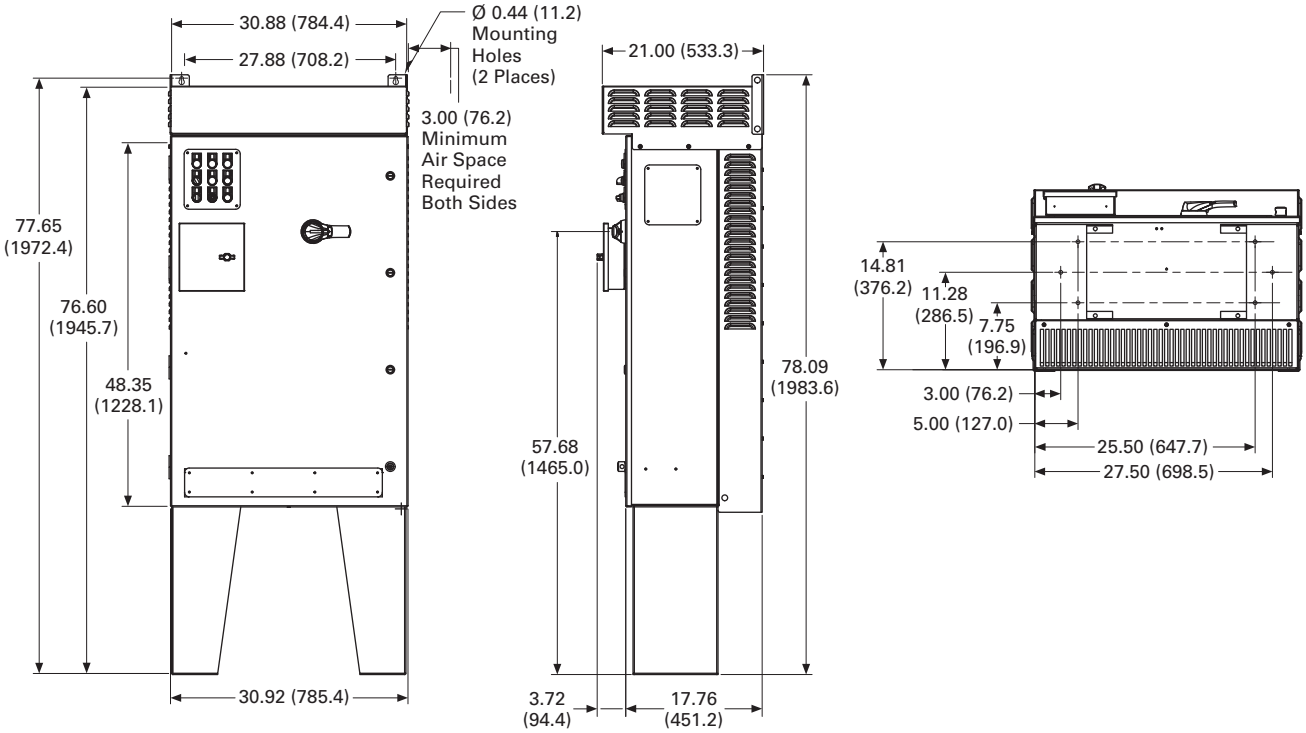

DX Box Type 1

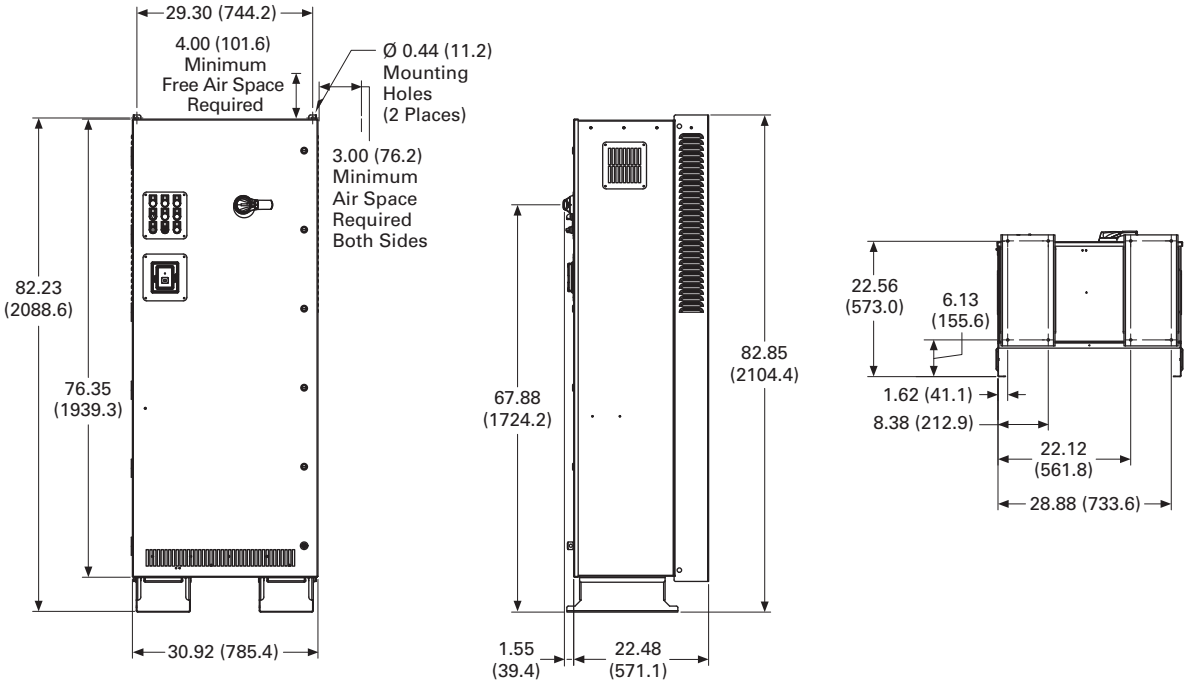

Approximate Dimensions in Inches (mm)

DX Box Type 12

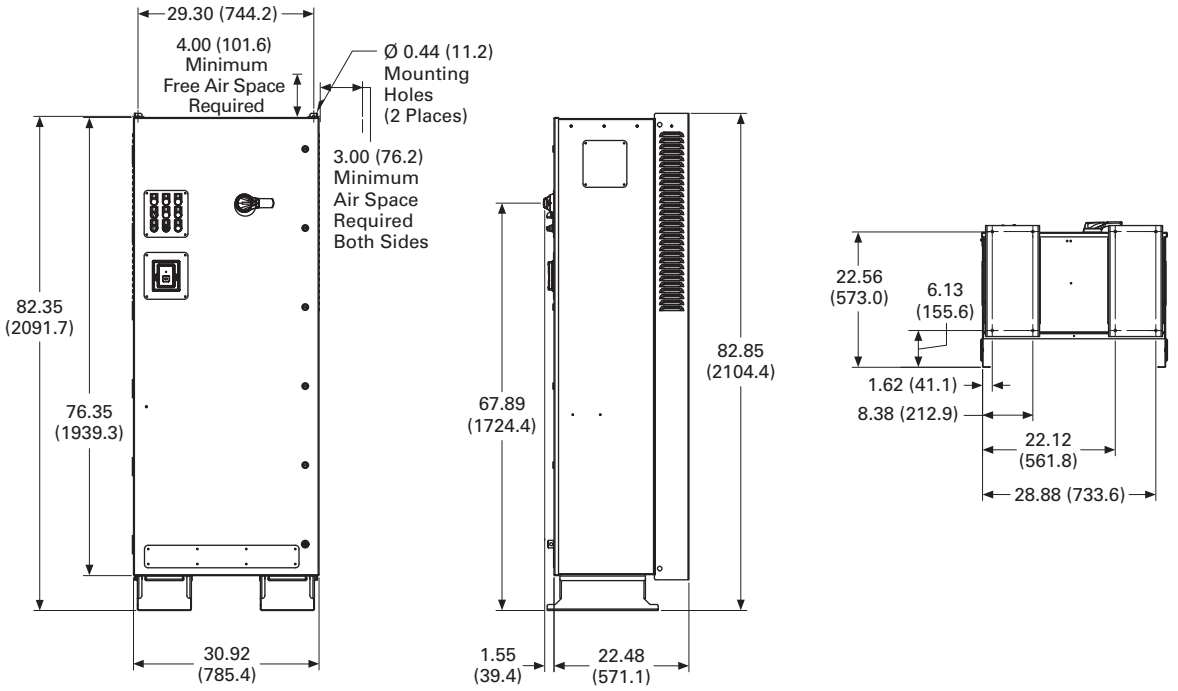

DX Box Type 3R

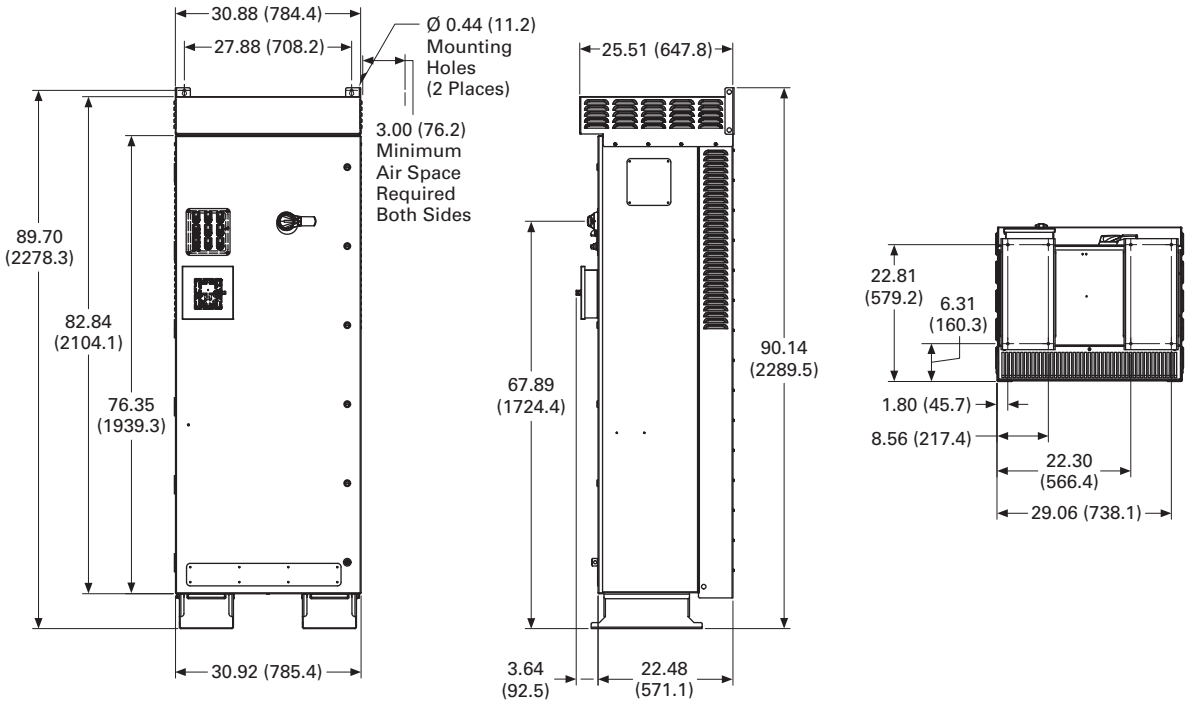

Approximate Dimensions in Inches (mm)

Size 5

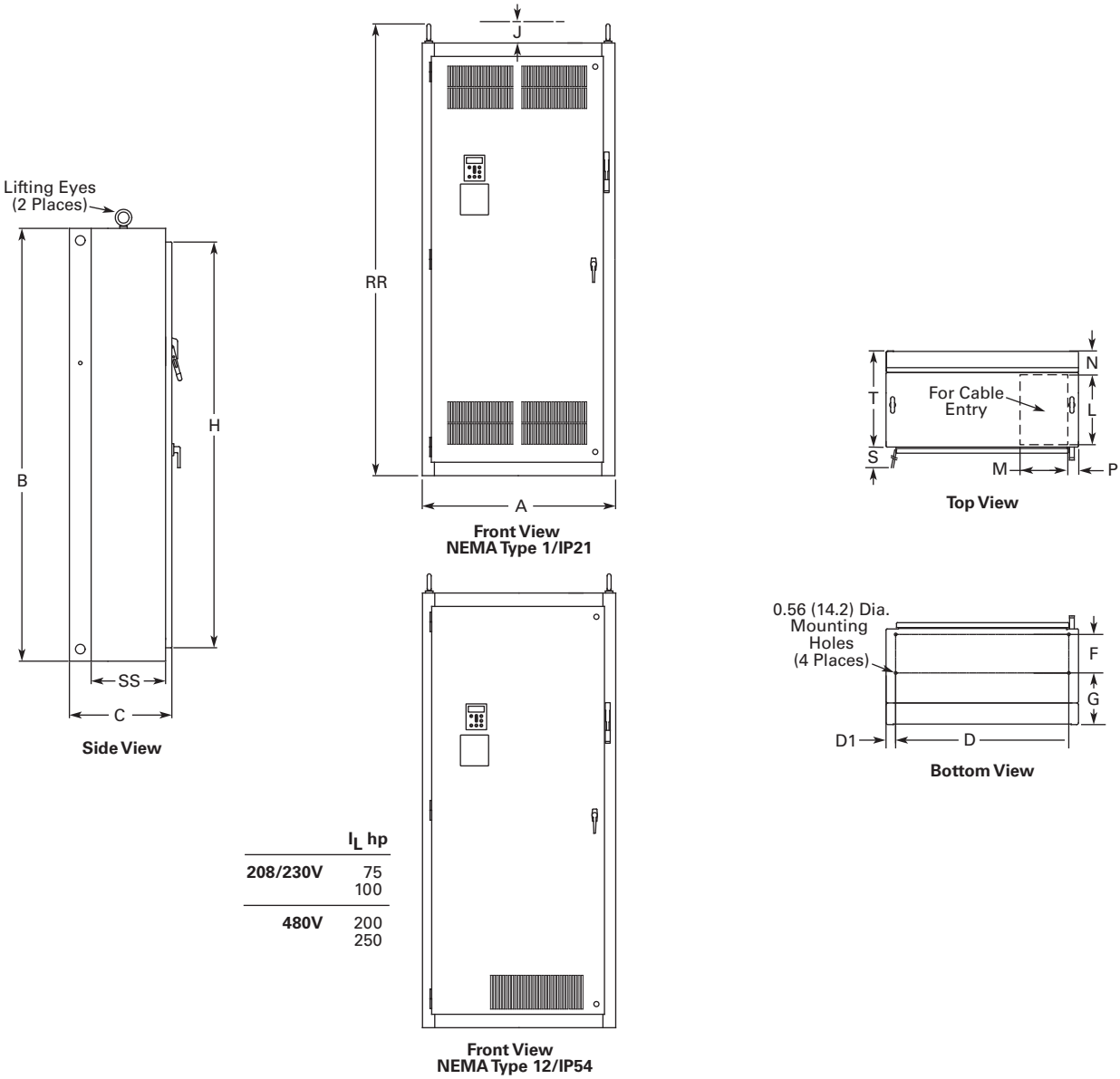

	I_L hp
208/230V	75 100
480V	200 250

For reference only, dimensions are subject to change.

Wide	High	Deep	Mounting							Door Height	Min. Air Space	
A	**B**	**C**	**D**	**D1**	**E**	**E1**	**F**	**G**	**G1**	**H**	**J**	**K**
40.0 (1016)	90.0 (2286)	21.3 (541)	36.0 (914)	2.0 (51)	—	—	8.0 (203)	10.8 (273)	—	84.4 (2143)	4.0 (102)	—

Cable Entry					Door Clearance										Max. Approx. Shipping Weight
L	**M**	**N**	**P**	**R**	**S**	**T**	**U**	**V**	**W**	**RR**	**SS**	**TT**	**UU**	**VV**	**Lbs (kg)**
15.0 (381)	10.0 (254)	4.8 (122)	2.0 (51)	—	36.3 (921)	20.0 (508)	—	—	—	94.0 (2387)	15.5 (394)	—	—	—	1275 (579)

Approximate Dimensions in Inches (mm)

Size 6

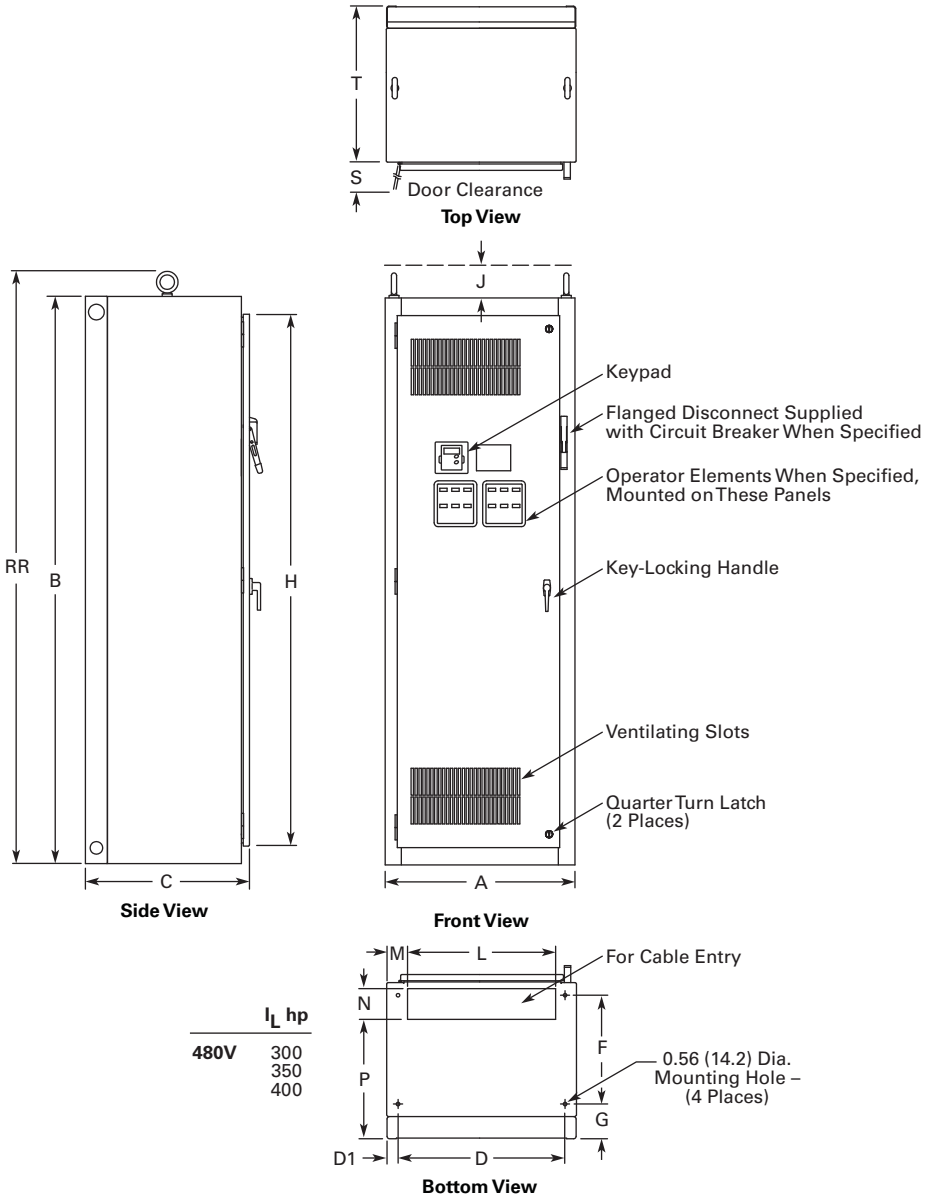

	I_L hp
480V	300 350 400

For reference only, dimensions are subject to change. See **Page V6-T2-140**, notes 3 and 5 for enclosure and option selection.

Wide	High	Deep	Mounting							Door Height	Min. Air Space	
A	B	C	D	D1	E	E1	F	G	G1	H	J	K
30.0 (762)	90.0 (2286)	26.0 (660)	26.5 (673)	1.8 (46)	—	—	17.3 (438)	5.5 (140)	—	84.4 (2143)	4.0 (102)	—

Cable Entry					Door Clearance										Max. Approx. Shipping Weight
L	M	N	P	R	S	T	U	V	W	RR	SS	TT	UU	VV	Lbs (kg)
23.5 (597)	3.3 (84)	4.5 (114)	19.3 (490)	—	26.2 (667)	24.8 (629)	—	—	—	93.9 (2386)	—	—	—	—	1500 (681)

Approximate Dimensions in Inches (mm)

Size 8

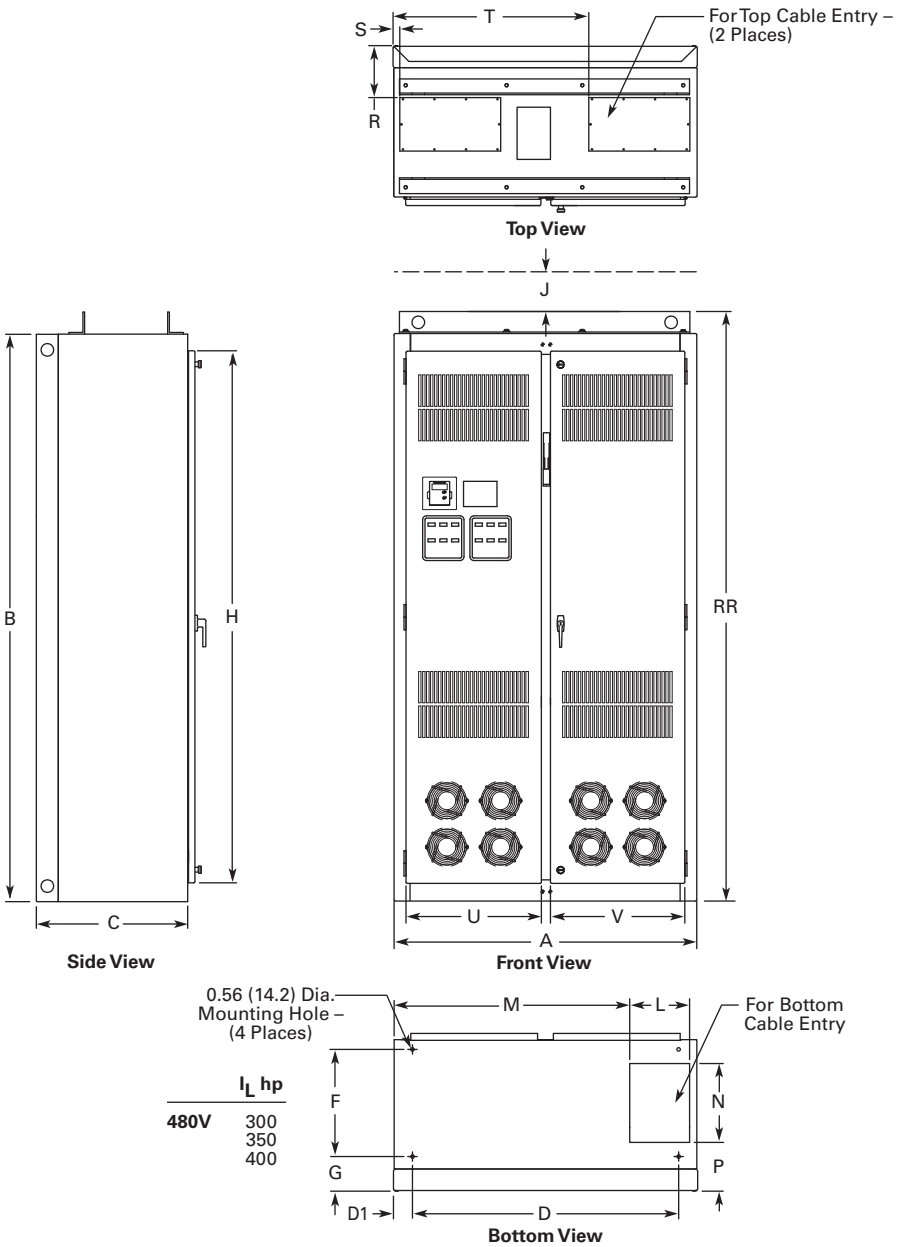

I_L hp	
480V	300
	350
	400

For reference only, dimensions are subject to change. See **Page V6-T2-140**, notes 3 and 5 for enclosure and option selection.

Wide A	High B	Deep C	Mounting D	D1	E	E1	F	G	G1	Door Height H	Min. Air Space J	K
48.0 (1219)	90.0 (2286)	24.0 (610)	42.2 (1072)	3.0 (77)	—	—	—	5.5 (139)	—	84.4 (2143)	4.0 (102)	—

Cable Entry L	M	N	P	R	S	T	U	V	W	RR	SS	TT	UU	VV	Max. Approx. Shipping Weight Lbs (kg)
9.5 (241)	37.5 (952)	12.5 (318)	7.7 (196)	8.3 (210)	1.3 (32)	31.0 (787)	21.5 (545)	21.3 (541)	—	93.5 (2375)	—	—	—	—	2000 (908)

Approximate Dimensions in Inches (mm)

Size 9

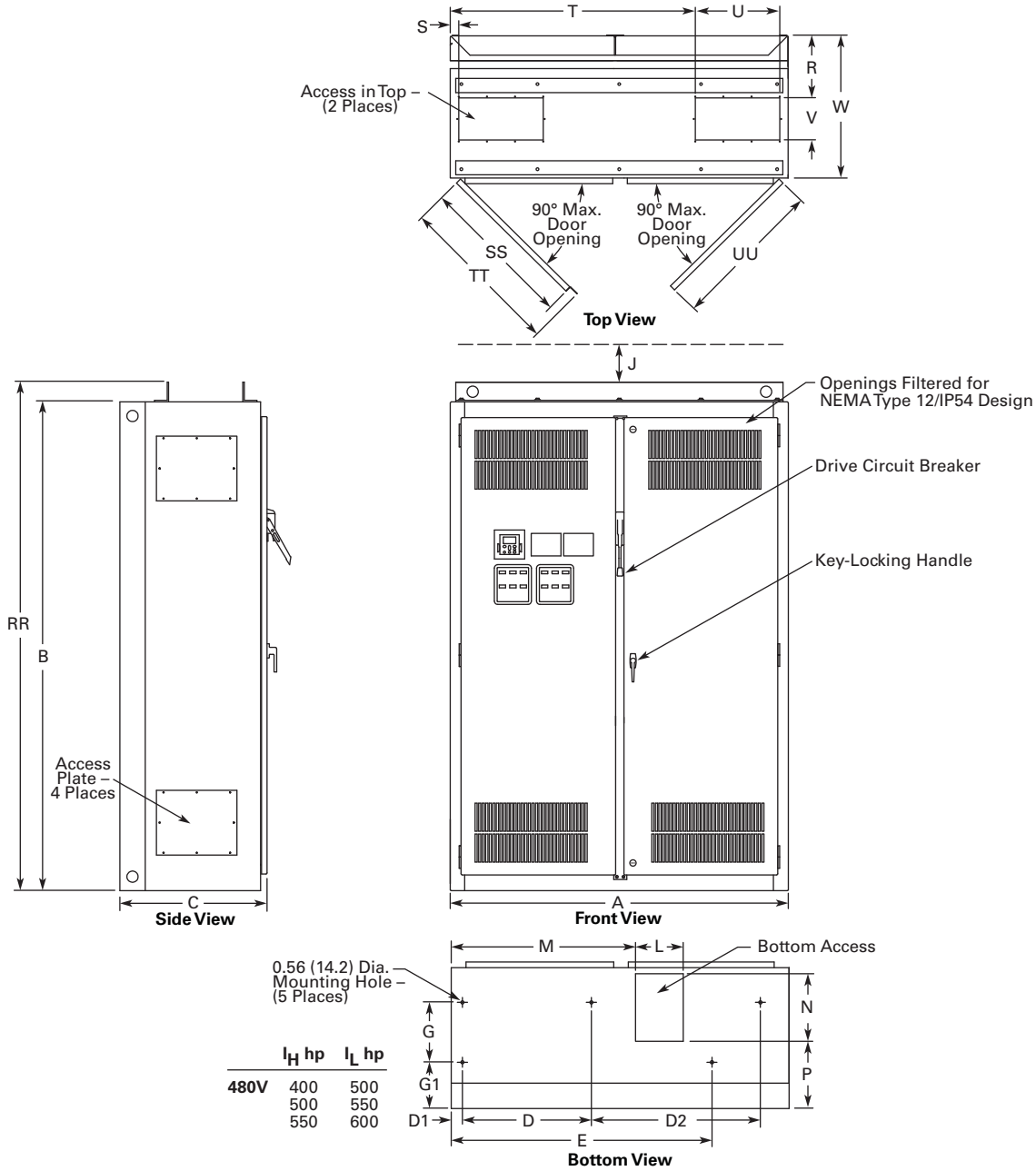

	I_H hp	I_L hp
480V	400	500
	500	550
	550	600

For reference only, dimensions are subject to change. See **Page V6-T2-140**, notes 3 and 5 for enclosure and option selection.

Wide A	High B	Deep C	Mounting D	D1	E	E1	F	G	G1	Door Height H	Min. Air Space J	K
60.0 (1524)	90.0 (2286)	26.1 (664)	22.9 (582)	2.0 (51)	30.0 (762)	44.3 (1125)	10.6 (270)	10.6 (270)	8.2 (208)	—	4.0 (102)	—

Cable Entry L	M	N	P	R	S	T	U	V	W	RR	SS	TT	UU	VV	Max. Approx. Shipping Weight Lbs (kg)
8.5 (216)	32.7 (831)	12.0 (305)	11.9 (303)	9.8 (249)	1.5 (38)	43.5 (1105)	15.0 (381)	7.5 (191)	25.0 (635)	93.5 (2375)	27.4 (696)	290.1 (738)	270.1 (687)	—	2500 (1135)

Approximate Dimensions in Inches (mm)

Enclosure Size F

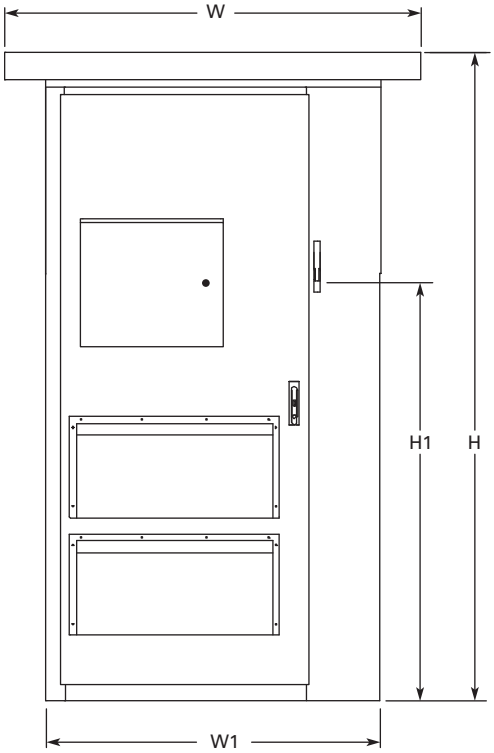

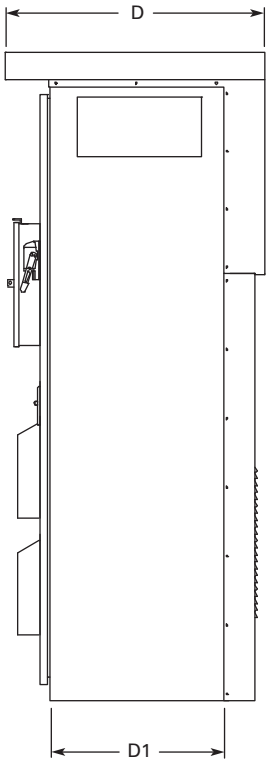

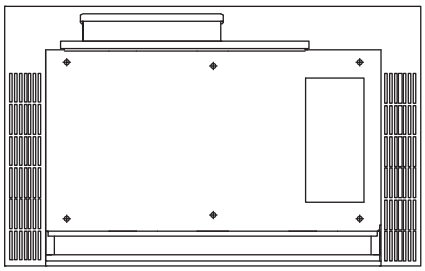

H	H1	W	W1	D	D1	Approximate Weight Lbs (kg)	Approximate Shipping Weight Lbs (kg)
93.58 (2376.9)	69.51 (1765.60)	60.00 (1524.0)	48.00 (1219.2)	37.50 (952.5)	26.00 (660.4)	1700 (771)	1850 (839)

H-Max Drives

Contents

Description	*Page*
H-Max Drives	
Catalog Number Selection	**V6-T2-171**
Product Selection	**V6-T2-172**
Accessories	**V6-T2-176**
Replacement Parts	**V6-T2-176**
Technical Data and Specifications	**V6-T2-179**
Wiring Diagram	**V6-T2-180**
Dimensions	**V6-T2-181**
H-Max IntelliPass and IntelliDisconnect Drives	**V6-T2-182**

H-Max Drives

Product Description

Eaton's H-Max Series VFD has software and hardware designed specifically for the HVAC, pump industry. The ultra-efficient DC capacitor and power structure allows the drive to consume less energy, lowering greenhouse gases.

The I/O configuration is designed with wiring ergonomics in mind by including removable terminal blocks. The main, easily removable, control board used for all drive frames with six digital IN, two analog IN, one analog OUT, three relay OUT accepts two additional I/O or communication board. In addition, the control board has built-in RS-485 and Ethernet communication.

These drives continue the tradition of robust performance, and raise the bar on features and functionality, ensuring the best solution at the right price.

In addition to the Active Energy Control Algorithm to maximize motor efficiency, the drive boasts an ultra-efficient DC capacitor and power structure to allow less energy consumption, lowering greenhouse gases.

Features and Benefits

Hardware

- Thin metal capacitor design—ultra-efficient drive operation and extended self life (up to five years without reforming)
- Integrated 5% DC link choke with Input surge protection—protects against voltage spikes and provides a clean wave form to the motor
- EMI/RFI filters standard on all drives—meets EMC Category 2 for commercial applications
- Real-time clock—supports calendaring and time stamped fault history
- Graphic LCD display and keypad—supports simple menu navigation as well as on-screen diagnostics and troubleshooting
- HAND-OFF-AUTO and drive-bypass selector on keypad—simplifies control
- Standard I/O: 6DI, 2AI, 1AO, 2 Form C RO (NO/NC), 1 Form A RO (NO)—supports requirements for most installations
- Onboard RS 485: Modbus, N2, BACnet—meets needs of most communication requirements
- Onboard Ethernet: BACnet/IP, Modbus/TCP—meets needs of most communication requirements
- Two expansion slots—intended to support additional I/O or communication protocols as necessary
- Quick disconnect terminals for I/O connections—supports fast easy installation

Software

- Active energy control—minimizes energy losses in your motor resulting in industry leading energy efficiency for your application
- Quick Start Wizard upon initial power up—supports fast easy installation
- Copy/paste functionality on drive keypad—allows for fast setup of multiple drives
- Pre-programmed I/O—supports fast easy installation for most applications

Standards and Certifications

Product

- IEC 61800-5-1
- CE
- UL508C
- cUL
- C-Tick Mark
- OSHPD Seismic Certified
- Plenum Rated

Catalog Number Selection

H-Max Series Drives

HMX 3 4 A G 3D4 2 1 - N

Product
HMX = HVAC drive

Phase
3 = Three-phase

Voltage
2 = 200–240 V
4 = 380–480 V
5 = 525–600 V

Software Series
A–Z

Keypad
G = Graphical panel

Amperes

200–240 Volts	380–480 Volts	525–600 Volts
3D7 = 3.7 A–0.75 hp, 0.55 kW	**3D4** = 3.4 A–1.5 hp, 1.1 kW	**3D9** = 3.9 A, 3 hp, 2.2 kW
4D8 = 4.8 A–1 hp, 0.75 kW	**4D8** = 4.8–2 hp, 1.5 kW	**6D1** = 6.1 A, 5 hp, 3.7 kW
6D6 = 6.6 A–1.5 hp, 1.1 kW	**5D6** = 5.6 A–3 hp, 2.2 kW	**9D0** = 9 A, 7.5 hp, 5.5 kW
8D0 = 8 A–2 hp, 1.5 kW	**8D0** = 8 A–4 hp, 3 kW	**011** = 11 A, 10 hp, 7.5 kW
011 = 11 A–3 hp, 2.2 kW	**9D6** = 9.6 A–5 hp, 4 kW	**018** = 18 A, 15 hp, 11 kW
012 = 12 A–4 hp, 3 kW	**012** = 12 A–7.5 hp, 5.5 kW	**022** = 22 A, 20 hp, 15 kW
018 = 18 A–5 hp, 4 kW	**016** = 16 A–10 hp, 7.5 kW	**027** = 27 A, 25 hp, 18 kW
024 = 24 A–7.5 hp, 5.5 kW	**023** = 23 A–15 hp, 11 kW	**034** = 34 A, 30 hp, 22 kW
031 = 31 A–10 hp, 7.5 kW	**031** = 31 A–20 hp, 15 kW	**041** = 41 A, 40 hp, 30 kW
048 = 48 A–15 hp, 11 kW	**038** = 38 A–25 hp, 18.5 kW	**052** = 52 A, 50 hp, 37 kW
062 = 62 A–20 hp, 15 kW	**046** = 46 A–30 hp, 22 kW	**062** = 62 A, 60 hp, 45 kW
075 = 75 A–25 hp, 18.5 kW	**061** = 61 A–40 hp, 30 kW	**080** = 80 A, 75 hp, 55 kW
088 = 88 A–30 hp, 22 kW	**072** = 72 A–50 hp, 37 kW	**100** = 100 A, 100 hp, 75 kW
105 = 105 A–40 hp, 30 kW	**087** = 87 A–60 hp, 45 kW	**125** = 125 A, 125 hp, 90 kW
140 = 140 A–50 hp, 37 kW	**105** = 105 A–75 hp, 55 kW	**144** = 144 A, 150 hp, 110 kW
170 = 170 A–60 hp, 45 kW	**140** = 140 A–100 hp, 75 kW	**208** = 208 A, 200 hp, 160 kW
205 = 205 A–75 hp, 55 kW	**170** = 170 A–125 hp, 90 kW	
261 = 261 A–100 hp, 75 kW	**205** = 205 A–150 hp, 110 kW	
310 = 310 A–125 hp, 90 kW	**261** = 261 A–200 hp, 132 kW	
	310 = 310 A–250 hp, 160 kW	

Enclosure
1 = Open NEMA Type 1 IP21
2 = Open NEMA Type 12 IP54

Input Options Frame and Voltage Specific
2 = EMC C2

Braking/Application
N = No brake chopper (low overload)

Notes

All boards are varnished (conformed coated). Corrosion resistant.
Battery included in all drives for real-time clock.
Keypad kit includes HOA bypass.
Keypad kit includes HOA, back reset for Europe application.
EMI/RFI filters included.
DC link choke included.

Product Selection

H-Max Series Drives—230 Vac

NEMA Type 1

NEMA Type 1/IP21

FS Frame Size	Drive Output Current Low Overload Full Load Amps at 40 °C	Horsepower	Assigned Motor Ratings Drive kW 230 Vac/50 Hz	230 Vac NEC Amps ①	Low Overload Full Load Amps at 50 °C	Catalog Number
4	3.7	0.75	0.55	3.2	2.6	**HMX32AG3D721-N**
	4.8	1	0.75	4.2	3.7	**HMX32AG4D821-N**
	6.6	1.5	1.1	6.6	4.8	**HMX32AG6D621-N**
	8	2	1.5	6.8	6.6	**HMX32AG8D021-N**
	11	3	2.2	9.6	8	**HMX32AG01121-N**
	12.5	4	3	N/A	11	**HMX32AG01221-N**
5	18	5	4	15.2	12.5	**HMX32AG01821-N**
	24	7.5	5.5	22	18	**HMX32AG02421-N**
	31	10	7.5	28	24	**HMX32AG03121-N**
6	48	15	11	42	31	**HMX32AG04821-N**
	62	20	15	54	48	**HMX32AG06221-N**
7	75	25	18.5	68	62	**HMX32AG07521-N**
	88	30	22	80	75	**HMX32AG08821-N**
	105	40	30	104	88	**HMX32AG10521-N**
8	140	50	37	130	105	**HMX32AG14021-N**
	170	60	45	154	140	**HMX32AG17021-N**
	205	75	55	192	170	**HMX32AG20521-N**
9	261	100	75	248	205	**HMX32AG26121-N**
	310	125	90	N/A	261	**HMX32AG31021-N**

NEMA Type 12

NEMA Type 12/IP54

FS Frame Size	Drive Output Current Low Overload Full Load Amps at 40 °C	Horsepower	Assigned Motor Ratings Drive kW 230 Vac/50 Hz	230 Vac NEC Amps ①	Low Overload Full Load Amps at 50 °C	Catalog Number
4	3.7	0.75	0.55	3.2	2.6	**HMX32AG3D722-N**
	4.8	1	0.75	4.2	3.7	**HMX32AG4D822-N**
	6.6	1.5	1.1	6.6	4.8	**HMX32AG6D622-N**
	8	2	1.5	6.8	6.6	**HMX32AG8D022-N**
	11	3	2.2	9.6	8	**HMX32AG01122-N**
	12.5	4	3	N/A	11	**HMX32AG01222-N**
5	18	5	4	15.2	12	**HMX32AG01822-N**
	24	7.5	5.5	22	18	**HMX32AG02422-N**
	31	10	7.5	28	24	**HMX32AG03122-N**
6	48	15	11	42	31	**HMX32AG04822-N**
	62	20	15	54	48	**HMX32AG06222-N**
7	75	25	18.5	68	62	**HMX32AG07522-N**
	88	30	22	80	75	**HMX32AG08822-N**
	105	40	30	104	88	**HMX32AG10522-N**
8	140	50	37	130	105	**HMX32AG14022-N**
	170	60	45	154	140	**HMX32AG17022-N**
	205	75	55	192	170	**HMX32AG20522-N**
9	261	100	75	248	205	**HMX32AG26122-N**
	310	125	90	N/A	261	**HMX32AG31022-N**

Note

① For sizing reference.

H-Max Series Drives—480 Vac

NEMA Type 1

NEMA Type 1/IP21

FS Frame Size	Drive Output Current Low Overload Full Load Amps at 40 °C	Horsepower	Assigned Motor Ratings Drive kW 400 Vac/50 Hz	480 Vac NEC Amps ①	Low Overload Full Load Amps at 50 °C	Catalog Number
4	3.4	1.5	1.1	2.1	2.6	**HMX34AG3D421-N**
	4.8	2	1.5	3.4	3.4	**HMX34AG4D821-N**
	5.6	3	2.2	5.6	4.8	**HMX34AG5D621-N**
	8.0	4	3.0	N/A	5.6	**HMX34AG8D021-N**
	9.6	5	4	7.6	8	**HMX34AG9D621-N**
	12	7.5	5.5	11	9.6	**HMX34AG01221-N**
5	16	10	7.5	14	12	**HMX34AG01621-N**
	23	15	11	21	16	**HMX34AG02321-N**
	31	20	15	27	23	**HMX34AG03121-N**
6	38	25	18.5	34	31	**HMX34AG03821-N**
	46	30	22	40	38	**HMX34AG04621-N**
	61	40	30	52	46	**HMX34AG06121-N**
7	72	50	37	65	61	**HMX34AG07221-N**
	87	60	45	77	72	**HMX34AG08721-N**
	105	75	55	96	87	**HMX34AG10521-N**
8	140	100	75	124	105	**HMX34AG14021-N**
	170	125	90	156	140	**HMX34AG17021-N**
	205	150	110	180	170	**HMX34AG20521-N**
9	261	200	132	240	205	**HMX34AG26121-N**
	310	250	160	302	261	**HMX34AG31021-N**

NEMA Type 12

NEMA Type 12/IP54

FS Frame Size	Drive Output Current Low Overload Full Load Amps at 40 °C	Horsepower	Assigned Motor Ratings Drive kW 400 Vac/50 Hz	480 Vac NEC Amps ①	Low Overload Full Load Amps at 50 °C	Catalog Number
4	3.4	1.5	1.1	2.1	2.6	**HMX34AG3D422-N**
	4.8	2	1.5	3.4	3.4	**HMX34AG4D822-N**
	5.6	3	2.2	5.6	4.8	**HMX34AG5D622-N**
	8.0	4	3.0	N/A	5.6	**HMX34AG8D022-N**
	9.6	5	4	7.6	8	**HMX34AG9D622-N**
	12	7.5	5.5	11	9.6	**HMX34AG01222-N**
5	16	10	7.5	14	12	**HMX34AG01622-N**
	23	15	11	21	16	**HMX34AG02322-N**
	31	20	15	27	23	**HMX34AG03122-N**
6	38	25	18.5	34	31	**HMX34AG03822-N**
	46	30	22	40	38	**HMX34AG04622-N**
	61	40	30	52	46	**HMX34AG06122-N**
7	72	50	37	65	61	**HMX34AG07222-N**
	87	60	45	77	72	**HMX34AG08722-N**
	105	75	55	96	87	**HMX34AG10522-N**
8	140	100	75	124	105	**HMX34AG14022-N**
	170	125	90	156	140	**HMX34AG17022-N**
	205	150	110	180	170	**HMX34AG20522-N**
9	261	200	132	240	205	**HMX34AG26122-N**
	310	250	160	302	261	**HMX34AG31022-N**

Note

① For sizing reference.

H-Max Series Drives—600 Vac

NEMA Type 1

NEMA Type 1/IP21

FS Frame Size	Drive Output Current Low Overload Full Load Amps at 40 °C	Horsepower	Assigned Motor Ratings Drive kW 575 Vac/50 Hz	575 Vac NEC Amps ①	Low Overload Full Load Amps at 50 °C	Catalog Number
5	3.9	3	2.2	4.6	3.3	**HMX35AG3D921-N**
	6.1	5	3.7	6.8	5.2	**HMX35AG6D121-N**
	9	7.5	5.5	9	7.7	**HMX35AG9D021-N**
	11	10	7.5	10.5	9.4	**HMX35AG01121-N**
6	18	15	11	19.9	15.3	**HMX35AG01821-N**
	22	20	15	23.3	18.7	**HMX35AG02221-N**
	27	25	18	27.2	23	**HMX35AG02721-N**
	34	30	22	32.8	28.9	**HMX35AG03421-N**
7	41	40	30	45.3	34.9	**HMX35AG04121-N**
	52	50	37	53.8	44.2	**HMX35AG05221-N**
	62	60	45	62.2	52.7	**HMX35AG06221-N**
8	80	75	55	90	68	**HMX35AG08021-N**
	100	100	75	106	85	**HMX35AG10021-N**
	125	125	90	127	106.3	**HMX35AG12521-N**
9	144	150	110	156	122.4	**HMX35AG14421-N**
	208	200	160	212	176.8	**HMX35AG20821-N**

NEMA Type 12

NEMA Type 12/IP54

FS Frame Size	Drive Output Current Low Overload Full Load Amps at 40 °C	Horsepower	Assigned Motor Ratings Drive kW 575 Vac/50 Hz	575 Vac NEC Amps ①	Low Overload Full Load Amps at 50 °C	Catalog Number
5	3.9	3	2.2	4.6	3.3	**HMX35AG3D922-N**
	6.1	5	3.7	6.8	5.2	**HMX35AG6D122-N**
	9	7.5	5.5	9	7.7	**HMX35AG9D022-N**
	11	10	7.5	10.5	9.4	**HMX35AG01122-N**
6	18	15	11	19.9	15.3	**HMX35AG01822-N**
	22	20	15	23.3	18.7	**HMX35AG02222-N**
	27	25	18	27.2	23	**HMX35AG02722-N**
	34	30	22	32.8	28.9	**HMX35AG03422-N**
7	41	40	30	45.3	34.9	**HMX35AG04122-N**
	52	50	37	53.8	44.2	**HMX35AG05222-N**
	62	60	45	62.2	52.7	**HMX35AG06222-N**
8	80	75	55	90	68	**HMX35AG08022-N**
	100	100	75	106	85	**HMX35AG10022-N**
	125	125	90	127	106.3	**HMX35AG12522-N**
9	144	150	110	156	122.4	**HMX35AG14422-N**
	208	200	160	212	176.8	**HMX35AG20822-N**

Note

① For sizing reference.

Onboard Network Communications

Johnson Controls Metasys N2

H-Max Series provides communication between the drive and a Johnson Controls Metasys™ N2 network. With this connection, the drive can be controlled, monitored and programmed from the Metasys system. N2 can be selected and programmed by the drive keypad.

BACnet

H-Max Series provides communication to BACnet networks. Data transfer is master-slave/token passing (MS/TP) RS-485.

BACnet/IP

100Base-T interface.

Modbus TCP

Ethernet based protocol.

Modbus RTU

H-Max Series provides communication to Modbus RTU RS-485 as a slave on a Modbus network. Other communication parameters include an address range from 1–247; a parity of None, Odd or Even; and the stop bit is 1.

H-Max Series Option Board Kits Available for Slot B

The factory issued relay option board can be replaced with the following option boards to customize the drive for your application needs.

The standard board provides 2 Form C RO (NO/NC) and 1 Form A RO (NO).

Option Boards Mounted in Slot B

Option Kit Description	Option Kit Catalog Number
I/O expander card, 2 RO and thermistor input	**Relay Board 2**

H-Max Series Option Board Kits Available for Slots D and E

The H-Max Series drives can accommodate a wide selection of expander and adapter option boards to customize the drive for your application needs. The drive's control unit is designed to accept a total of two option boards.

The H-Max Series factory-installed standard board configuration includes an I/O board and a relay output board.

Option Boards Mounted in Slots D and E

Option Kit Description	Option Kit Catalog Number
6 x DI /DO, each digital input can be individually programmed as digital output	**XMX-IO-B1-A**
1RO Form C (NO/NC), 1RO Form A (NO), 1 thermistor	**XMX-IO-B2-A**
1 x AI, 2 x AO (isolated)	**XMX-IO-B4-A**
3 x RO Form A (NO)	**XMX-IO-B5-A**
1RO Form A (NO), 5DI 42–240 Vac input	**XMX-IO-B9-A**
1 x AO, 1 x DO, 1 x RO	**XMX-IO-BF-A**
LonWorks®	**XMX-COM-C4-A**

NEMA Type 1 to NEMA Type 12/IP54 Conversion Kit

The NEMA Type 12/IP54 option kit is used to convert a NEMA Type 1 to a NEMA Type 12 drive.

Kit consists of a drive cover, fan kit and plugs.

NEMA Type 12/IP54 Cover

Option Kit Description	Option Kit Catalog Number
FS4-branded N12/IP54 cover with gasket, plastic plug, fans, Eaton logos	**FS4-N12KIT**
FS5-branded N12/IP54 cover with gasket, plastic plug, fans, Eaton logos	**FS5-N12KIT**
FS6-branded N12/IP54 cover with gasket, plastic plug, fans, Eaton logos	**FS6-N12KIT**

Accessories

Flange Kits

The flange kit is used when the power section heat sink is mounted through the back panel of an enclosure.

Flange Kit NEMA Type 12/IP54

Includes flange, mounting brackets, NEMA Type 12 fan components, air shroud screws and plugs.

Frames FS4–FS7 ①②

Description	Catalog Number
NEMA Type 12/IP54	
FS4 N12/IP54 flange kit (mounting N1 drive into N12 enclosure)	**FS4-Flange-N12KIT**
FS5 N12/IP54 flange kit (mounting N1 drive into N12 enclosure)	**FS5-Flange-N12KIT**
FS6 N12/IP54 flange kit (mounting N1 drive into N12 enclosure)	**FS6-Flange-N12KIT**
FS7 N12/IP54 flange kit (mounting N1 drive into N12 enclosure)	**FS7-Flange-N12KIT**

Keypad Accessories

Remote Mounting Keypad Kit

Frames FS4–FS9

Description	Catalog Number
Remote mounting keypad kit—bezel and cable	**OPTRMT-BP-HMAX-WLABL**

Drive Demo

H-Max Series Drive Demo

Demos and Power Supply

Description	Catalog Number
H-Max Series bypass demo	**H-MAX-BYPASS-DEMO**
Hand-held 24 V auxiliary power supply—used to supply power to the control module in order to perform keypad programming before the drive is connected to line voltage	**9000XAUX24 V**

Notes

① For installation of a NEMA Type 1 drive into a NEMA Type 12 oversized enclosure.
② Frame size 8 and 9 must be ordered from the factory as a flange mount unit.

Replacement Parts

Control Board/Keypad

Description	Current Catalog Number
H-Max series graphic bypass, HOA	**KeypadbypassHOA**
H-Max series graphic back, HOA	**KeypadbackHOA**
H-Max control board replacement	**HMX-SPR-CTRLBOARD**

PC Cable

Description	Catalog Number
Remote download USB to RJ-45 cable with software driver disk	**REM-USB-Down**

Replacement Relay Board in Slot B

Description	Catalog Number
Replacement relay board qty 2 Form C relay, qty 1 Form A relay	**Relay board 1**

Main Fan

Description	Catalog Number
FS4 main fan	**FS4-Main Fan**
FS5 main fan	**FS5-Main Fan**
FS6 main fan	**FS6-Main Fan**
FS7 main fan	**FS7-Main Fan**
FS8 main fan	**FS8-Main Fan**
FS9 main fan	**FS9-Main Fan**

Internal Fan

Description	Catalog Number
FS4 internal fan (IP54/NEMA 12)	**FS4-Internal Fan**
FS5 internal fan (IP54/NEMA 12)	**FS5-Internal Fan**
FS6 internal fan (IP54/NEMA 12)	**FS6-Internal Fan**
FS7 internal fan (IP54/NEMA 12)	**FS7-Internal Fan**
FS8 internal fan (IP54/NEMA 12)	**FS8-Internal Fan**
FS9 internal fan (IP54/NEMA 12)	**FS9-Internal Fan**

Line and Load Reactors

A line and load reactor is a three-phase inductance filter that can be placed on the line and load side of the AFD to help improve the harmonic performance of the system. Consult the factory for additional filtering options and further technical details.

DR1 Line Reactor

A line reactor helps to provide a moderate reduction in current harmonics similar to a DC choke. It also provides increased input protection for AFD and its semiconductors from line transients helping to extend the life of the AFD.

DR2 Output Reactor

An output filter is used to reduce the transient voltage (dV/dt) at the motor terminals. The output filter is recommended for cable lengths exceeding 100 ft (30 m) with a drive of 3 hp and above and for cable lengths of 33 ft (10 m) with a drive of 2 hp and below.

Line and Load Reactors—Catalog Number Selection

D R1 – 2 2D0 – 0 5

Basic Naming
D = Drive

Device Series
R1 = Line side reactor
R2 = Load side reactor

Input/Output Voltage
2 = 240 V
4 = 480 V

Current Rating
Examples:
2D0 = 2.0 A
4D0 = 4.0 A
8D0 = 8.0 A
012 = 12 A

Environment Rating
0 = Open
1 = NEMA 1

Impedance
3 = 3%
5 = 5%

Line and Load Reactors—240 V

	Open				NEMA 1			
	Load Reactor		Line Reactor		Load Reactor		Line Reactor	
hp (VT)	3%	5%	3%	5%	3%	5%	3%	5%
0.75	DR2-24D0-03	DR2-24D0-05	DR1-23D2-03	DR1-23D2-05	DR2-24D0-13	DR2-24D0-15	DR1-23D2-13	DR1-23D2-15
1	DR2-24D0-03	DR2-28D0-05	DR1-24D2-03	DR1-24D2-05	DR2-24D0-13	DR2-28D0-15	DR1-24D2-13	DR1-24D2-15
1.5	DR2-28D0-03	DR2-28D0-05	DR1-26D0-03	DR1-26D0-05	DR2-28D0-13	DR2-28D0-15	DR1-26D0-13	DR1-26D0-15
2	DR2-28D0-03	DR2-28D0-05	DR1-26D8-03	DR1-26D8-05	DR2-28D0-13	DR2-28D0-15	DR1-26D8-13	DR1-26D8-15
3	DR2-2012-03	DR2-2012-05	DR1-29D6-03	DR1-29D6-05	DR2-2012-13	DR2-2012-15	DR1-29D6-13	DR1-29D6-15
5	DR2-2018-03	DR2-2018-05	DR1-2015-03	DR1-2015-05	DR2-2018-13	DR2-2018-15	DR1-2015-13	DR1-2015-15
7.5	DR2-2025-03	DR2-2025-05	DR1-2022-03	DR1-2022-05	DR2-2025-13	DR2-2025-15	DR1-2022-13	DR1-2022-15
10	DR2-2035-03	DR2-2035-05	DR1-2028-03	DR1-2028-05	DR2-2035-13	DR2-2035-15	DR1-2028-13	DR1-2028-15
15	DR2-2045-03	DR2-2045-05	DR1-2042-03	DR1-2042-05	DR2-2045-13	DR2-2045-15	DR1-2042-13	DR1-2042-15
20	DR2-2055-03	DR2-2055-05	DR1-2054-03	DR1-2054-05	DR2-2055-13	DR2-2055-15	DR1-2054-13	DR1-2054-15
25	DR2-2080-03	DR2-2080-05	DR1-2068-03	DR1-2068-05	DR2-2080-13	DR2-2080-15	DR1-2068-13	DR1-2068-15
30	DR2-2080-03	DR2-2100-05	DR1-2080-03	DR1-2080-05	DR2-2080-13	DR2-2100-15	DR1-2080-13	DR1-2080-15
40	DR2-2100-03	DR2-2100-05	DR1-2104-03	DR1-2104-05	DR2-2100-13	DR2-2100-15	DR1-2104-13	DR1-2104-15
50	DR2-2130-03	DR2-2130-05	DR1-2130-03	DR1-2130-05	DR2-2130-13	DR2-2130-15	DR1-2130-13	DR1-2130-15
60	DR2-2160-03	DR2-2200-15	DR1-2154-03	DR1-2154-05	DR2-2160-13	DR2-2200-15	DR1-2154-13	DR1-2154-15
75	DR2-2200-13	DR2-2200-15	DR1-2192-03	DR1-2192-05	DR2-2200-13	DR2-2200-15	DR1-2192-13	DR1-2192-15
100	DR2-2225-13	DR2-2225-15	DR1-2248-03	DR1-2248-05	DR2-2225-13	DR2-2225-15	DR1-2248-13	DR1-2248-15
125	DR2-2320-13	DR2-2320-15	DR1-2312-03	DR1-2312-05	DR2-2320-13	DR2-2320-15	DR1-2312-13	DR1-2312-15

Line and Load Reactors—480 V

	Open				NEMA 1			
	Load Reactor		Line Reactor		Load Reactor		Line Reactor	
hp (VT)	3%	5%	3%	5%	3%	5%	3%	5%
1.5	DR2-44D0-05	DR2-44D0-05	DR1-43D0-03	DR1-43D0-05	DR2-44D0-13	DR2-44D0-15	DR1-43D0-13	DR1-43D0-15
2	DR2-44D0-03	DR2-44D0-05	DR1-43D4-03	DR1-43D4-05	DR2-44D0-13	DR2-44D0-15	DR1-43D4-13	DR1-43D4-15
3	DR2-48D0-03	DR2-48D0-05	DR1-44D8-03	DR1-44D8-05	DR2-48D0-13	DR2-48D0-15	DR1-44D8-13	DR1-44D8-15
5	DR2-48D0-03	DR2-48D0-05	DR1-47D6-03	DR1-47D6-05	DR2-48D0-13	DR2-48D0-15	DR1-47D6-13	DR1-47D6-15
7.5	DR2-4012-03	DR2-4012-05	DR1-4011-03	DR1-4011-05	DR2-4012-13	DR2-4012-15	DR1-4011-13	DR1-4011-15
10	DR2-4018-03	DR2-4018-05	DR1-4014-03	DR1-4014-05	DR2-4018-13	DR2-4018-15	DR1-4014-13	DR1-4014-15
15	DR2-4025-03	DR2-4025-05	DR1-4021-03	DR1-4021-05	DR2-4025-13	DR2-4025-15	DR1-4021-13	DR1-4021-15
20	DR2-4025-03	DR2-4025-05	DR1-4027-03	DR1-4027-05	DR2-4025-13	DR2-4025-15	DR1-4027-13	DR1-4027-15
25	DR2-4035-03	DR2-4035-05	DR1-4034-03	DR1-4034-05	DR2-4035-13	DR2-4035-15	DR1-4034-13	DR1-4034-15
30	DR2-4045-03	DR2-4045-05	DR1-4040-03	DR1-4040-05	DR2-4045-13	DR2-4045-15	DR1-4040-13	DR1-4040-15
40	DR2-4055-03	DR2-4055-05	DR1-4052-03	DR1-4052-05	DR2-4055-13	DR2-4055-15	DR1-4052-13	DR1-4052-15
50	DR2-4080-03	DR2-4080-05	DR1-4065-03	DR1-4065-05	DR2-4080-13	DR2-4080-15	DR1-4065-13	DR1-4065-15
60	DR2-4100-03	DR2-4080-05	DR1-4077-03	DR1-4077-05	DR2-4100-13	DR2-4080-15	DR1-4077-13	DR1-4077-15
75	DR2-4100-03	DR2-4100-05	DR1-4096-03	DR1-4096-05	DR2-4100-13	DR2-4100-15	DR1-4096-13	DR1-4096-15
100	DR2-4130-03	DR2-4130-05	DR1-4124-03	DR1-4124-05	DR2-4130-13	DR2-4130-15	DR1-4124-13	DR1-4124-15
125	DR2-4160-03	DR2-4160-05	DR1-4156-03	DR1-4156-05	DR2-4160-13	DR2-4160-15	DR1-4156-13	DR1-4156-15
150	DR2-4200-13	DR2-4200-15	DR1-4180-03	DR1-4180-05	DR2-4200-13	DR2-4200-15	DR1-4180-13	DR1-4180-15
200	DR2-4250-13	DR2-4250-15	DR1-4240-03	DR1-4240-05	DR2-4250-13	DR2-4250-15	DR1-4240-13	DR1-4240-15

Technical Data and Specifications

H-Max Series Drives

Description	Specification
Input Ratings	
Input voltage (V_{in})	200–240 Vac, 380–480 Vac, 525–600 Vac, –10%/+10%
Input frequency (f_{in})	50/60 Hz (variation up to 47–66 Hz)
Connection to power	Once per minute or less (typical operation)
Short-circuit withstand rating	100 kAIC
Output Ratings	
Output voltage	0 to V_{in}/U_{in} line voltage in
Continuous output current	Ambient temperature max. 104 °F (40 °C)
I_L overload	1.1 x I_L (1 min./10 min.)
Overload current	110% (1 min./10 min.)
Initial output current	150% for two seconds
Output frequency	0 to 320 Hz
Frequency resolution	0.01 Hz
Control Characteristics	
Control method	Frequency control (V/f) open loop sensorless vector control
Switching frequency	1–310 amps FS4–9: default 6 kHz
Frequency reference	Analog input: Resolution 0.1% (10-bit), accuracy ±1% Panel reference: Resolution 0.01 Hz
Field weakening point	8 to 320 Hz
Acceleration time	0.1 to 3000 seconds
Deceleration time	0.1 to 3000 seconds
Braking torque	DC brake: 30% x T_n
Ambient Conditions	
Ambient operating temperature	FS4–FS9: 14 °F (–10 °C), no frost to 104 °F (40 °C) (Drive can operate at 122 °F (50 °C), see **Pages V6-T2-172** and **V6-T2-173**)
Storage temperature	–40° to 158 °F (–40° to 70 °C)
Relative humidity	0 to 95% RH, noncondensing, non-corrosive, no dripping water
Air quality	Chemical vapors: IEC 60721-3-3, unit in operation, Class 3C2; Mechanical particles: IEC 60721-3-3, unit in operation, Class 3S2
Altitude	100% load capacity (no derating) up to 3280 ft (1000 m); 1% derating for each 328 ft (100 m) above 3280 ft (1000 m); max. 9842 ft (3000 m); 380–480 V
Vibration	FS4–FS9: EN 61800-5-1, EN 60068-2-6; 5 to 150 Hz, displacement amplitude 1 mm (peak) at 5 to 15.8 Hz, max. acceleration amplitude 1G at 15.8 to 150 Hz
Shock	EN 61800-5-1, EN 60068-2-27 UPS Drop test (for applicable UPS weights) Storage and shipping: max. 15 g, 11 ms (in package)
Enclosure class	NEMA Type 1/IP21 or NEMA Type 12/IP54 (keypad required for IP54/Type 12)
Standards	
EMC	Immunity: Fulfills all EMC immunity requirements; Emissions: EN 61800-3, LEVEL H (EMC C2)
Emissions	EMC level dependent— +EMC 2: EN61800-3 (2004) Category C2 Delivered with Class C2 EMC filtering as default.
Efficiency	97.5% at 480 V 96.6% at 208/230 V

Description	Specification
Control Connections	
Analog input voltage	0 to 10 V, R = 200 kohms differential Resolution 0.1%; Accuracy ±1% DIP switch selection (voltage/current)
Analog input current	0(4) to 20 mA; R_i –250 ohms differential
Digital inputs (6)	Positive or negative logic; 18 to 30 Vdc
Auxiliary voltage	+24 V ±10%, max. 250 mA
Output reference voltage	+10 V +3%, max. load 10 mA
Analog output	0–10 V, 0(4) to 20 mA; R_L max. 500 ohms; Resolution 10 bit; Accuracy ±2% DIP switch selection (voltage/current)
Relay outputs	3 programmable, 2 Form C, 1 Form A relay outputs Switching capacity: 24 Vdc/8 A, 250 Vac/8 A, 125 Vdc/0.4 A
Hard wire jumper	Between terminal 6 and 10 factory default
DIP switch setting default	RS-485 = off A01 = current A12 = current A11 = voltage
Protections	
Overcurrent protection	Yes
Overvoltage protection	Yes
DC bus regulation anti-trip	Yes (accelerates or decelerates the load)
Undervoltage protection	Yes
Earth fault protection	Yes (in case of earth fault in motor or motor cable, only the frequency converter is protected)
Input phase supervision	Yes (trips if any of the input phases are missing)
Motor phase supervision	Yes (trips if any of the output phases are missing)
Overtemperature protection	Yes
Motor overload protection	Yes
Motor stall protection	Yes
Motor underload protection	Yes
Short-circuit protection	Yes
Surge protection	Yes (varistor input)
Conformed coated (varnished) boards	Yes (prevents corrosion)

Wiring Diagram

Control Input/Output, PID Application

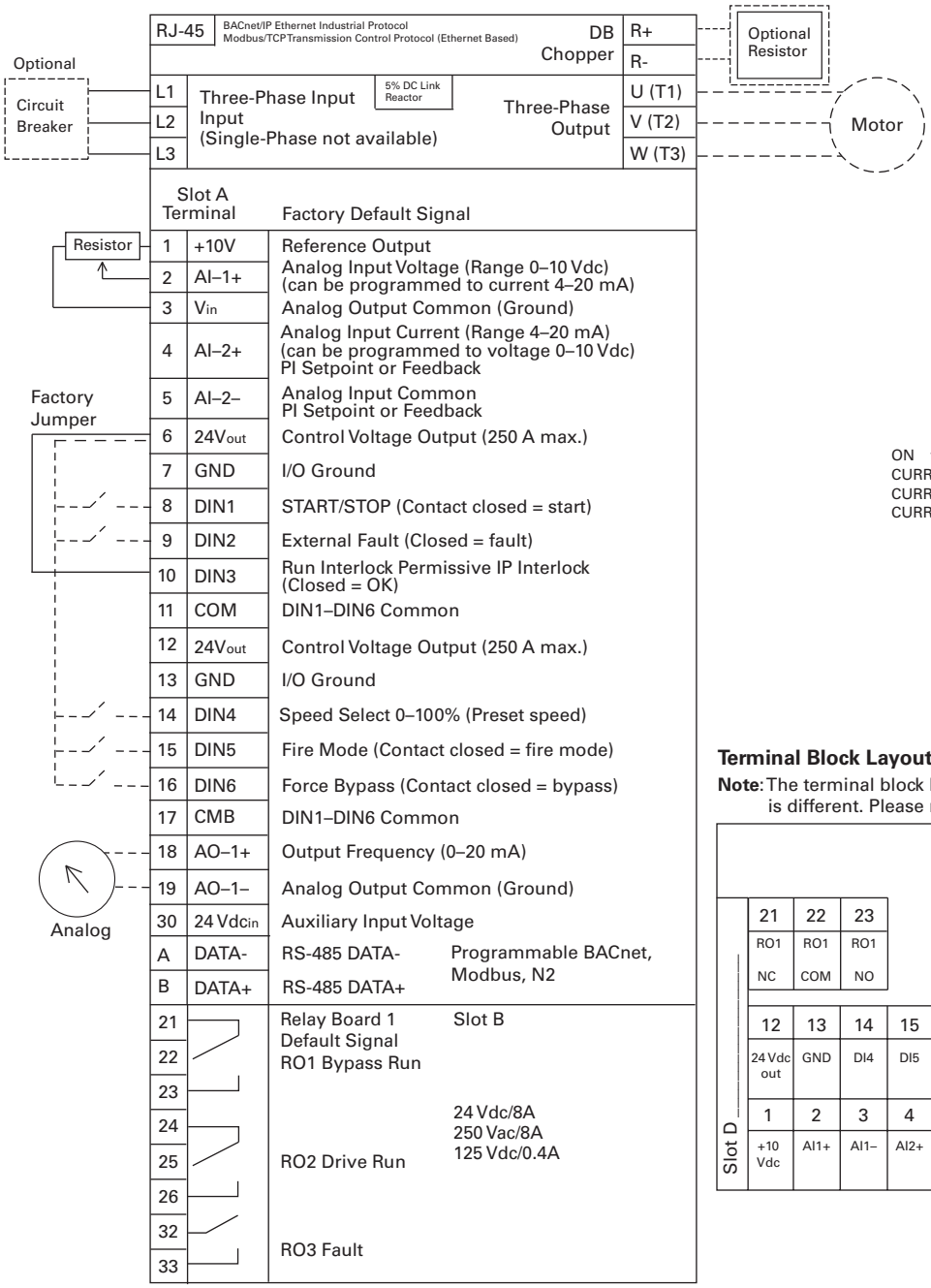

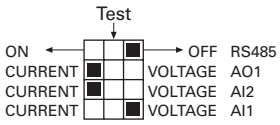

Terminal Block Layout

Note: The terminal block layout for the 525–600 V rated drives is different. Please refer to manual MN040021EN.

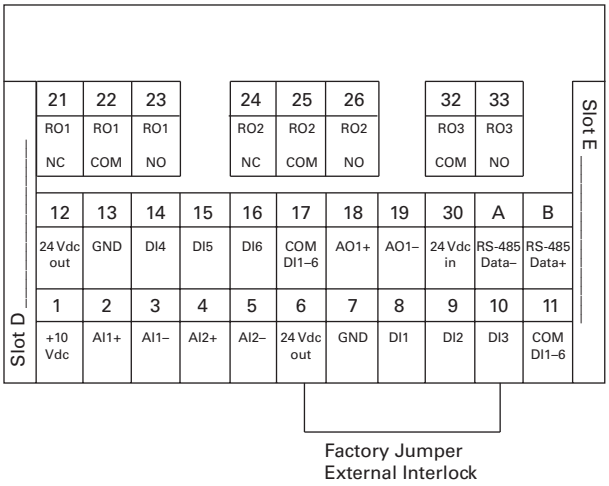

Standards

- Digital inputs D1–D6, relay out, analog in/out are freely programmed
- The user can assign a single input to multiple functions

Includes

- Six digital input
- Two analog input
- One analog output
- Three relay output
- RS-485
- Ethernet (BACnet and Modbus)

Reliability

- Pretested components
- Conformal coated (varnished) boards
- 40 °C rated
- 110% overload for one minute
- Eaton Electrical Services & Systems national network of AF drive specialists

Dimensions

Approximate Dimensions in Inches (mm)

H-Max Series Frames FS4–FS7

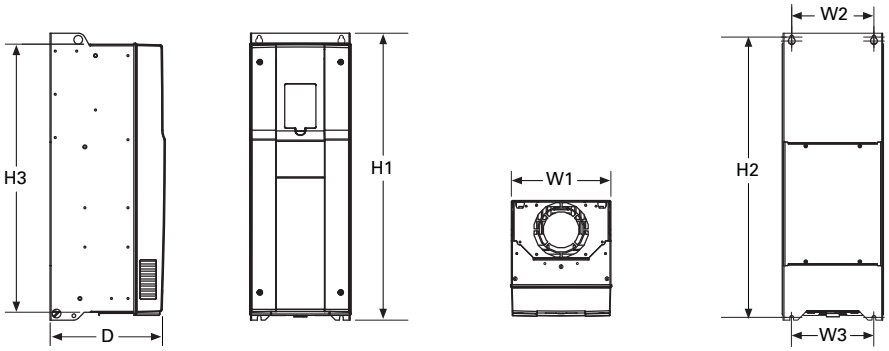

Voltage	hp	kW	Amps	D	H1	Hole Center-to-Center H2	H3	W1	W2	W3	Weight in Lbs (kg)
FS4											
230 Vac	0.75–4	0.55–3.0	3.7–12.5	7.77 (197.3)	12.89 (327.5)	12.32 (313.0)	11.22 (285.0)	5.04 (128.0)	3.94 (100.0)	3.94 (100.0)	13.2 (6)
480 Vac	1.5–7.5	1.1–5.5	3.4–12								
FS5											
230 Vac	5–10	4–7.5	18–31	8.73 (221.6)	16.50 (419.0)	15.98 (406.0)	15.04 (382.0)	5.67 (144.0)	4.53 (115.0)	3.94 (100.0)	22.0 (10)
480 Vac	10–20	7.5–15	16–31								
FS6											
230 Vac	15–20	11–15	48–62	9.29 (236.0)	21.93 (557.0)	21.28 (540.5)	20.24 (514.0)	7.68 (195.0)	5.83 (148.0)	5.83 (148.0)	44.1 (20)
480 Vac	25–40	18.5–30	38–61								
FS7											
230 Vac	25–30	18.5–30	75–105	10.49 (266.5)	25.98 (660.0)	25.39 (645.0)	24.29 (617.0)	9.06 (230.0)	7.48 (190.0)	7.48 (190.0)	82.6 (37.5)
480 Vac	50–75	37–55	72–105								

H-Max Series Frames FS8 and FS9

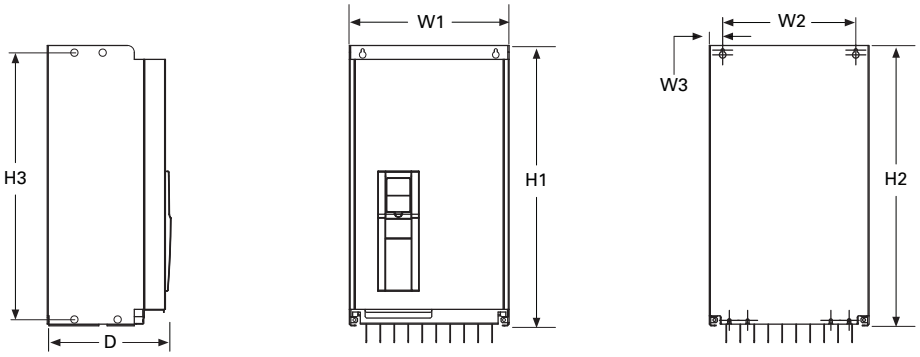

Voltage	hp	kW	Amps	D	H1	Hole Center-to-Center H2	H3	W1	W2	W3	Weight in Lbs (kg)
FS8											
230 Vac	50–75	37–55	140–205	13.76 (349.6)	38.02 (965.7)	37.26 (946.4)	37.26 (946.4)	11.42 (290.1)	9.29 (236.0)	1.42 (36.0)	154.3 (70)
480 Vac	100–150	75–110									
FS9											
230 Vac	100–120	75–90	261–310	14.63 (371.6)	33.09 (890.4)	31.89 (810.0)	31.89 (810.0)	18.90 (480.0)	15.75 (400.0)	1.57 (40.0)	238.1 (108)
480 Vac	200–250	132–160									

Note: For flange dimension, please reference User Manual.

H-Max IntelliPass and IntelliDisconnect Drives

Contents

Description	*Page*
H-Max Drives	**V6-T2-170**
H-Max IntelliPass and IntelliDisconnect Drives	
Catalog Number Selection	**V6-T2-183**
Product Selection	**V6-T2-184**
Technical Data and Specifications	**V6-T2-194**
Wiring Diagrams	**V6-T2-195**
Dimensions	**V6-T2-197**

H-Max IntelliPass and IntelliDisconnect Drives

Product Description

The IntelliPass electronic bypass is a two or optional three contactor design using a 24 Vdc ***XT*** Series contactor with an optional manual override switch that allows the unit to run in bypass without the H-Max Series drive.

The IntelliPass software parameters utilize engineering units common to the HVAC industry. Onboard startup wizard guarantees flawless commissioning with plug-and-play screen entry. Available in NEMA/UL Type 1, Type 12 and Type 3R with optional pre-engineered operator devices to meet all customized specification requirements.

The IntelliPass construction features allow for easy installation, reliable operation and serviceability with additional onboard wire space, and removable conduit plates with knockouts.

Features and Benefits

Industry-leading energy saving solution—uses the Eaton H-Max drive with Active Energy Control algorithm.

Built to be as tough as the application—Eaton's robust design boasts an industrial grade enclosure and industry proven components.

- Industrial Power Supply
- ***XT*** Contactors
- 22 mm Pilot Devices

Built-in electronic bypass capability with external 24 Vdc power supply allows the H-Max drive to control the bypass circuit through the keypad, digital input or BMS communications and in fault conditions.

Designed with Our Customers in Mind

- Removable top and bottom entry panels
- Door-mounted graphic display and keypad
- Easily accessible connection terminals with removable I/O terminal connections

Engineered Product Solution

- The Eaton H-Max IntelliPass and IntelliDisconnect products are available with a variety of factory tested and certified options meeting or exceeding UL508C requirements

Standards and Certifications

Product

- IEC 61800-5-1
- UL508C
- cUL
- OSHPD Seismic Certified

Catalog Number Selection

H-Max Series IntelliPass and IntelliDisconnect Drives

HMX 011 3 4 N A _ _ _ _ _ _ _ _ _ _

Build options alphabetically and numerically.

Product

HMX = HVAC drive (VT) (low overload)

NEC Ampere Ratings

208 Volts	480 Volts
4D6 = 4.6 A–1 hp	**2D1** = 2.1 A–1 hp
7D5 = 7.5 A–2 hp	**3D4** = 3.4 A–2 hp
011 = 11 A–3 hp	**5D6** = 5.6 A–3 hp
017 = 17 A–5 hp	**7D6** = 7.6 A–5 hp
025 = 25 A–7.5 hp	**011** = 11 A–7.5 hp
031 = 31 A–10 hp	**014** = 14 A–10 hp
047 = 47 A–15 hp	**021** = 21 A–15 hp
060 = 60 A–20 hp	**027** = 27 A–20 hp
075 = 75 A–25 hp	**034** = 34 A–25 hp
088 = 88 A–30 hp	**040** = 40 A–30 hp
114 = 114 A–40 hp	**052** = 52 A–40 hp
143 = 143 A–50 hp	**065** = 65 A–50 hp
169 = 169 A–60 hp	**077** = 77 A–60 hp
211 = 211 A–75 hp	**096** = 96 A–75 hp
273 = 273 A–100 hp	**124** = 124 A–100 hp
230 Volts	**156** = 156 A–125 hp
4D2 = 4.2 A–1 hp	**180** = 180 A–150 hp
6D8 = 6.8 A–2 hp	**240** = 240 A–200 hp
9D6 = 9.6 A–3 hp	**302** = 302 A–250 hp
016 = 16 A–5 hp	
022 = 22 A–7.5 hp	
028 = 28 A–10 hp	
042 = 42 A–15 hp	
054 = 54 A–20 hp	
068 = 68 A–25 hp	
080 = 80 A–30 hp	
104 = 104 A–40 hp	
130 = 130 A–50 hp	
154 = 154 A–60 hp	
192 = 192 A–75 hp	
248 = 248 A–100 hp	

Voltage

1 = 208V
2 = 230 V
4 = 480 V

Enclosure Style

3 = IntelliPass NEMA Type 1
4 = IntelliPass NEMA Type 12
5 = IntelliPass NEMA Type 3R
6 = IntelliPass oversized NEMA Type 1
7 = IntelliPass oversized NEMA Type 12
A = IntelliDisconnect NEMA Type 1
B = IntelliDisconnect NEMA Type 12
C = IntelliDisconnect NEMA Type 3R
D = IntelliDisconnect oversized NEMA Type 1
E = IntelliDisconnect oversized NEMA Type 12

Braking/Application

N = No brake chopper (low overload)

Software Series

A–Z

Extended I/O Options in Slot D and E

B1 = 6 x DI /DO, Each digital input can be individually programmed as digital output
B2 = 1RO (NC/NO), 1RO (NO), 1 Thermistor
B4 = 1 x AI, 2 x AO (isolated)
B5 = 3 x RO
B9 = 1RO (NO), 5 DI 42–240 Vac input
BF = Expander IO, 1 AO, 1 DO, 1 RO

Optional Communications in Slot D and E

C4 = LonWorks

EMC Upgrade Option

EMC C2 Standard

Keypad Options

None available

IntelliDisconnect Options

L3 = Pilot lights (Power ON, RUN, Fault)
P3 = Fused drive isolation
PE = Output contactor
SA = Space heater w/transformer (Type 3R only)

IntelliPass Bypass Options

L4 = Pilot lights (Power ON, RUN, Fault, Bypass)
P3 = Fused drive isolation (can not be used with IS, P6 or M1)
P6 = Third contactor drive isolation (cannot be used with P3, IS or MI)
M1 = Manual bypass, includes isolation contactor and pilot lights (not available with P3, L4, P6 or IS)
SA = Space heater w/transformer (Type 3R only)
K9 = Auxiliary contacts
IS = Isolation switch (cannot be used with P3, P6 or M1)

Standard Onboard Communications

RS-485 Communications

BACnet MS/TP = Master slave/token protocol (Universal BACnet) RS-485
Modbus RTU RS-485, ASCII or RTU, remote terminal unit 32 nodes
N2 = Johnson Controls Metasys N2 network

Onboard Ethernet-Based Communications (port left side of keypad)

BACnet/IP Ethernet industrial protocol
Modbus/TCP Transmission control protocol (Ethernet-based)

Notes

IntelliPass—two contactor electronic bypass standard.
All boards are varnished. Corrosion resistant.
Battery included in all drives for real-time clock. Three year lifetime.
Keypad kit includes HOA bypass.
EMI/RFI filters included.
DC link choke included.
IntelliDisconnect includes 1 Form C and 1 Form A
IntelliPass includes 1 Form A.
When L3 or L4 option is selected, 1 Form A relay is used as well.
For more relays required, select/order the B5 option card.

Product Selection

H-Max Series IntelliPass NEMA Type 1—Two Contactor Bypass Standard

HMX_

208 Vac

Enclosure Frame Size	Horsepower	Drive Rated NEC Amps	Catalog Number
FS4	1	4.6	**HMX4D631NA**
	2	7.5	**HMX7D531NA**
	3	11	**HMX01131NA**
FS5	5	17	**HMX01731NA**
	7.5	25	**HMX02531NA**
	10	31	**HMX03131NA**
FS6	15	47	**HMX04731NA**
FS7	20	60	**HMX06031NA**
	25	75	**HMX07531NA**
	30	88	**HMX08831NA**

230 Vac

Enclosure Frame Size	Horsepower	Drive Rated NEC Amps	Catalog Number
FS4	1	4.2	**HMX4D232NA**
	2	6.8	**HMX6D832NA**
	3	9.6	**HMX9D632NA**
FS5	5	16	**HMX01632NA**
	7.5	22	**HMX02232NA**
	10	28	**HMX02832NA**
FS6	15	42	**HMX04232NA**
FS7	20	54	**HMX05432NA**
	25	68	**HMX06832NA**
	30	80	**HMX08032NA**

480 Vac

Enclosure Frame Size	Horsepower	Drive Rated NEC Amps	Catalog Number
FS4	1	2.1	**HMX2D134NA**
	2	3.4	**HMX3D434NA**
	3	5.6	**HMX5D634NA**
	5	7.6	**HMX7D634NA**
	7.5	11	**HMX01134NA**
FS5	10	14	**HMX01434NA**
	15	21	**HMX02134NA**
	20	27	**HMX02734NA**
FS6	25	34	**HMX03434NA**
	30	40	**HMX04034NA**
	40	52	**HMX05234NA**
FS7	50	65	**HMX06534NA**
	60	77	**HMX07734NA**
	75	96	**HMX09634NA**

Notes

For Wiring Diagrams, see **Page V6-T2-196**.
For NEMA 12 or 3R enclosures, see Catalog Number Selection on **Page V6-T2-183**.
Call Technical Support for NEMA 3R specifics. Enclosure size and weight differ from NEMA 1 and 12 products.

H-Max Series IntelliPass NEMA Type 12—Two Contactor Bypass Standard

HMX_

208 Vac

Enclosure Frame Size	Horsepower	Drive Rated NEC Amps	Catalog Number
FS4	1	4.6	**HMX4D641NA**
	2	7.5	**HMX7D541NA**
	3	11	**HMX01141NA**
FS5	5	17	**HMX01741NA**
	7.5	25	**HMX02541NA**
	10	31	**HMX03141NA**
FS6	15	47	**HMX04741NA**
FS7	20	60	**HMX06041NA**
	25	75	**HMX07541NA**
	30	88	**HMX08841NA**
D	40	114	**HMX11471NA**
	50	143	**HMX14371NA**
	60	169	**HMX16971NA**
5	75	211	**HMX21171NA**
	100	273	**HMX27371NA**

230 Vac

Enclosure Frame Size	Horsepower	Drive Rated NEC Amps	Catalog Number
FS4	1	4.2	**HMX4D242NA**
	2	6.8	**HMX6D842NA**
	3	9.6	**HMX9D642NA**
FS5	5	16	**HMX01642NA**
	7.5	22	**HMX02242NA**
	10	28	**HMX02842NA**
FS6	15	42	**HMX04242NA**
FS7	20	54	**HMX05442NA**
	25	68	**HMX06842NA**
	30	80	**HMX08042NA**
D	40	104	**HMX10472NA**
	50	130	**HMX13072NA**
	60	154	**HMX15472NA**
	75	192	**HMX19272NA**
5	100	248	**HMX24872NA**

Notes

For Wiring Diagrams, see **Page V6-T2-196**.
For NEMA 12 or 3R enclosures, see Catalog Number Selection on **Page V6-T2-183**.
Call Technical Support for NEMA 3R specifics. Enclosure size and weight differ from NEMA 1 and 12 products.

HMX_

480 Vac

Enclosure Frame Size	Horsepower	Drive Rated NEC Amps	Catalog Number
FS4	1	2.1	**HMX2D144NA**
	2	3.4	**HMX3D444NA**
	3	5.6	**HMX5D644NA**
	5	7.6	**HMX7D644NA**
	7.5	11	**HMX01144NA**
FS5	10	14	**HMX01444NA**
	15	21	**HMX02144NA**
	20	27	**HMX02744NA**
FS6	25	34	**HMX03444NA**
	30	40	**HMX04044NA**
	40	52	**HMX05244NA**
FS7	50	65	**HMX06544NA**
	60	77	**HMX07744NA**
	75	96	**HMX09644NA**
D	100	124	**HMX12747NA**
	125	156	**HMX15674NA**
	150	180	**HMX18074NA**
5	200	240	**HMX24074NA**
	250	302	**HMX30274NA**

H-Max Series IntelliPass NEMA Type 3R—Two Contactor Bypass Standard

HMX_

208 Vac

Enclosure Frame Size	Horsepower	Drive Rated NEC Amps	Catalog Number
A	1	4.6	**HMX4D651NA**
	2	7.5	**HMX7D551NA**
	3	11	**HMX01151NA**
A	5	17	**HMX01751NA**
	7.5	25	**HMX02551NA**
	10	31	**HMX03151NA**
B	15	47	**HMX04751NA**
C	20	60	**HMX06051NA**
	25	75	**HMX07551NA**
	30	88	**HMX08851NA**
D	40	114	**HMX11451NA**
	50	143	**HMX14351NA**
	60	169	**HMX16951NA**
F	75	211	**HMX21151NA**
	100	273	**HMA27351NA**

Notes

For Wiring Diagrams, see **Page V6-T2-196**.
For NEMA 12 or 3R enclosures, see Catalog Number Selection on **Page V6-T2-183**.
Call Technical Support for NEMA 3R specifics. Enclosure size and weight differ from NEMA 1 and 12 products.

HMX_

230 Vac

Enclosure Frame Size	Horsepower	Drive Rated NEC Amps	Catalog Number
A	1	4.2	**HMX4D252NA**
	2	6.8	**HMX6D852NA**
	3	9.6	**HMX9D652NA**
A	5	16	**HMX01652NA**
	7.5	22	**HMX02252NA**
	10	28	**HMX02852NA**
	15	42	**HMX04252NA**
B	20	54	**HMX05452NA**
C	25	68	**HMX06852NA**
	30	80	**HMX08052NA**
D	40	104	**HMX10452NA**
	50	130	**HMX13052NA**
	60	154	**HMX15452NA**
	75	192	**HMX19252NA**
F	100	248	**HMX24852NA**

480 Vac

Enclosure Frame Size	Horsepower	Drive Rated NEC Amps	Catalog Number
A	1	2.1	**HMX2D154NA**
	2	3.4	**HMX3D454NA**
	3	5.6	**HMX5D654NA**
	5	7.6	**HMX7D654NA**
	7.5	11	**HMX01154NA**
A	10	14	**HMX01454NA**
	15	21	**HMX02154NA**
	20	27	**HMX02754NA**
B	25	34	**HMX03454NA**
	30	40	**HMX04054NA**
	40	52	**HMX05254NA**
C	50	65	**HMX06554NA**
	60	77	**HMX07754NA**
	75	96	**HMX09654NA**
D	100	124	**HMX12544NA**
	125	156	**HMX15654NA**
	150	180	**HMX18054NA**
F	200	240	**HMX24054NA**
	250	302	**HMX30254NA**

Notes

For Wiring Diagrams, see **Page V6-T2-196**.
For NEMA 12 or 3R enclosures, see Catalog Number Selection on **Page V6-T2-183**.
Call Technical Support for NEMA 3R specifics. Enclosure size and weight differ from NEMA 1 and 12 products.

H-Max Series IntelliDisconnect NEMA Type 1—Main Disconnect Standard

HMX_

208 Vac

Enclosure Frame Size	Horsepower	Drive Rated NEC Amps	Catalog Number
FS4	1	4.6	**HMX4D6A1NA**
	2	7.5	**HMX7D5A1NA**
	3	11	**HMX011A1NA**
FS5	5	17	**HMX017A1NA**
	7.5	25	**HMX025A1NA**
	10	31	**HMX031A1NA**
FS6	15	47	**HMX047A1NA**
FS7	20	60	**HMX060A1NA**
	25	75	**HMX075A1NA**
	30	88	**HMX088A1NA**

230 Vac

Enclosure Frame Size	Horsepower	Drive Rated NEC Amps	Catalog Number
FS4	1	4.2	**HMX4D2A2NA**
	2	6.8	**HMX6D8A2NA**
	3	9.6	**HMX9D6A2NA**
FS5	5	16	**HMX016A2NA**
	7.5	22	**HMX022A2NA**
	10	28	**HMX028A2NA**
FS6	15	42	**HMX042A2NA**
FS7	20	54	**HMX054A2NA**
	25	68	**HMX068A2NA**
	30	80	**HMX080A2NA**

480 Vac

Enclosure Frame Size	Horsepower	Drive Rated NEC Amps	Catalog Number
FS4	1	2.1	**HMX2D1A4NA**
	2	3.4	**HMX3D4A4NA**
	3	5.6	**HMX5D6A4NA**
	5	7.6	**HMX7D6A4NA**
	7.5	11	**HMX011A4NA**
FS5	10	14	**HMX014A4NA**
	15	21	**HMX021A4NA**
	20	27	**HMX027A4NA**
FS6	25	34	**HMX034A4NA**
	30	40	**HMX040A4NA**
	40	52	**HMX052A4NA**
FS7	50	65	**HMX065A4NA**
	60	77	**HMX077A4NA**
	75	96	**HMX096A4NA**

Notes

For Wiring Diagrams, see **Page V6-T2-196**.
For NEMA 12 or 3R enclosures, see Catalog Number Selection on **Page V6-T2-183**.
Call Technical Support for NEMA 3R specifics. Enclosure size and weight differ from NEMA 1 and 12 products.

H-Max Series IntelliDisconnect NEMA Type 12—Main Disconnect Standard

HMX_

208 Vac

Enclosure Frame Size	Horsepower	Drive Rated NEC Amps	Catalog Number
FS4	1	4.6	**HMX4D6B1NA**
	2	7.5	**HMX7D5B1NA**
	3	11	**HMX011B1NA**
FS5	5	17	**HMX017B1NA**
	7.5	25	**HMX025B1NA**
	10	31	**HMX031B1NA**
FS6	15	47	**HMX047B1NA**
FS7	20	60	**HMX060B1NA**
	25	75	**HMX075B1NA**
	30	88	**HMX088B1NA**
D	40	114	**HMX114E1NA**
	50	143	**HMX143E1NA**
	60	169	**HMX169E1NA**
5	75	211	**HMX211E1NA**
	100	273	**HMA273E1NA**

230 Vac

Enclosure Frame Size	Horsepower	Drive Rated NEC Amps	Catalog Number
FS4	1	4.2	**HMX4D2B2NA**
	2	6.8	**HMX6D8B2NA**
	3	9.6	**HMX9D6B2NA**
FS5	5	16	**HMX016B2NA**
	7.5	22	**HMX022B2NA**
	10	28	**HMX028B2NA**
FS6	15	42	**HMX042B2NA**
FS7	20	54	**HMX054B2NA**
	25	68	**HMX068B2NA**
	30	80	**HMX080B2NA**
D	40	104	**HMX104E2NA**
	50	130	**HMX130E2NA**
	60	154	**HMX154E2NA**
	75	192	**HMX192E2NA**
5	100	248	**HMX248E2NA**

Notes

For Wiring Diagrams, see **Page V6-T2-196**.
For NEMA 12 or 3R enclosures, see Catalog Number Selection on **Page V6-T2-183**.
Call Technical Support for NEMA 3R specifics. Enclosure size and weight differ from NEMA 1 and 12 products.

HMX_

480 Vac

Enclosure Frame Size	Horsepower	Drive Rated NEC Amps	Catalog Number
FS4	1	2.1	**HMX2D1B4NA**
	2	3.4	**HMX3D4B4NA**
	3	5.6	**HMX5D6B4NA**
	5	7.6	**HMX7D6B4NA**
	7.5	11	**HMX011B4NA**
FS5	10	14	**HMX014B4NA**
	15	21	**HMX021B4NA**
	20	27	**HMX027B4NA**
FS6	25	34	**HMX034B4NA**
	30	40	**HMX040B4NA**
	40	52	**HMX052B4NA**
FS7	50	65	**HMX065B4NA**
	60	77	**HMX077B4NA**
	75	96	**HMX096B4NA**
D	100	124	**HMX12E44NA**
	125	156	**HMX156E4NA**
	150	180	**HMX180E4NA**
5	200	240	**HMX240E4NA**
	250	302	**HMX302E4NA**

Notes

For Wiring Diagrams, see **Page V6-T2-196**.
For NEMA 12 or 3R enclosures, see Catalog Number Selection on **Page V6-T2-183**.
Call Technical Support for NEMA 3R specifics. Enclosure size and weight differ from NEMA 1 and 12 products.

H-Max Series IntelliDisconnect NEMA Type 3R—Main Disconnect Standard

HMX_

208 Vac

Enclosure Frame Size	Horsepower	Drive Rated NEC Amps	Catalog Number
A	1	4.6	**HMX4D6C1NA**
	2	7.5	**HMX7D5C1NA**
	3	11	**HMX011C1NA**
A	5	17	**HMX017C1NA**
	7.5	25	**HMX025C1NA**
	10	31	**HMX031C1NA**
	15	47	**HMX047C1NA**
B	20	60	**HMX060C1NA**
C	25	75	**HMX075C1NA**
	30	88	**HMX088C1NA**
D	40	114	**HMX114C1NA**
	50	143	**HMX143C1NA**
	60	169	**HMX169C1NA**
F	75	211	**HMX211C1NA**
	100	273	**HMA273C1NA**

230 Vac

Enclosure Frame Size	Horsepower	Drive Rated NEC Amps	Catalog Number
A	1	4.2	**HMX4D2C2NA**
	2	6.8	**HMX6D8C2NA**
	3	9.6	**HMX9D6C2NA**
A	5	16	**HMX016C2NA**
	7.5	22	**HMX022C2NA**
	10	28	**HMX028C2NA**
	15	42	**HMX042C2NA**
B	20	54	**HMX054C2NA**
C	25	68	**HMX068C2NA**
	30	80	**HMX080C2NA**
D	40	104	**HMX104C2NA**
	50	130	**HMX130C2NA**
	60	154	**HMX154C2NA**
	75	192	**HMX192C2NA**
F	100	248	**HMX248C2NA**

Notes

For Wiring Diagrams, see **Page V6-T2-196**.
For NEMA 12 or 3R enclosures, see Catalog Number Selection on **Page V6-T2-183**.
Call Technical Support for NEMA 3R specifics. Enclosure size and weight differ from NEMA 1 and 12 products.

HMX_

480 Vac

Enclosure Frame Size	Horsepower	Drive Rated NEC Amps	Catalog Number
A	1	2.1	**HMX2D1C4NA**
	2	3.4	**HMX3D4C4NA**
	3	5.6	**HMX5D6C4NA**
	5	7.6	**HMX7D6C4NA**
	7.5	11	**HMX011C4NA**
A	10	14	**HMX014C4NA**
	15	21	**HMX021C4NA**
	20	27	**HMX027C4NA**
B	25	34	**HMX034C4NA**
	30	40	**HMX040C4NA**
	40	52	**HMX052C4NA**
C	50	65	**HMX065C4NA**
	60	77	**HMX077C4NA**
	75	96	**HMX096C4NA**
D	100	124	**HMX124C4NA**
	125	156	**HMX156C4NA**
	150	180	**HMX180C4NA**
F	200	240	**HMX240C4NA**
	250	302	**HMX302C4NA**

Notes

For Wiring Diagrams, see **Page V6-T2-196**.
For NEMA 12 or 3R enclosures, see Catalog Number Selection on **Page V6-T2-183**.
Call Technical Support for NEMA 3R specifics. Enclosure size and weight differ from NEMA 1 and 12 products.

Onboard Network Communications

Johnson Controls Metasys N2

H-Max Series provides communication between the drive and a Johnson Controls Metasys™ N2 network. With this connection, the drive can be controlled, monitored and programmed from the Metasys system. N2 can be selected and programmed by the drive keypad.

BACnet

H-Max Series provides communication to BACnet networks. Data transfer is master-slave/token passing (MS/TP) RS-485.

BACnet/IP

100Base-T interface.

Modbus TCP

Ethernet based protocol.

Modbus RTU

H-Max Series provides communication to Modbus RTU RS-485 as a slave on a Modbus network. Other communication parameters include an address range from 1 to 247; a parity of None, Odd or Even; and the stop bit is 1.

H-Max Series Option Board Kits Available for Slots D and E

The H-Max Series drives can accommodate a wide selection of expander and adapter option boards to customize the drive for your application needs. The drive's control unit is designed to accept a total of two option boards.

The H-Max Series factory-installed standard board configuration includes an I/O board and a relay output board.

Option Boards Mounted in Slots D and E

Option Kit Description	Option Kit Catalog Number
6 x DI /DO, each digital input can be individually programmed as digital output	**XMX-IO-B1-A**
1RO Form C (NO/NC), 1RO Form A (NO), 1 thermistor	**XMX-IO-B2-A**
1 x AI, 2 x AO (isolated)	**XMX-IO-B4-A**
3 x RO Form A (NO)	**XMX-IO-B5-A**
1RO Form A (NO), 5DI 42–240 Vac input	**XMX-IO-B9-A**
LonWorks	**XMX-COM-C4-A**
1 x AO, 1 x DO, 1 x RO	**XMX-IO-BF-A**

Extended I/O Options in Slot D and E

Description	Suffix Number
6 x DI /DO, Each digital input can be individually programmed as digital output	**B1**
1RO (NC/NO), 1RO (NO), 1 Thermistor	**B2**
1 x AI, 2 x AO (isolated)	**B4**
3 x RO	**B5**
1RO (NO), 5 DI 42–240 Vac input	**B9**
Expander IO, 1 AO, 1 DO, 1 RO	**BF**

Optional Communications in Slot D and E

Description	Suffix Number
LonWorks	**C4**

IntelliDisconnect Options

Description	Suffix Number
Pilot lights (Power ON, RUN, Fault)	**L3**
Fused drive isolation (cannot be used with PE)	**P3**
Output contactor (cannot be used with P3)	**PE**
Space heater w/transformer (Type 3R only)	**SA**

IntelliPass Bypass Options

Description	Suffix Number
Pilot lights (Power ON, RUN, Fault)	**L4**
Fused drive isolation (can not be used with P6)	**P3**
Third contactor drive isolation (cannot be used with P3 or IS)	**P6**
Manual bypass switch located on front door	**M1**
Space heater w/transformer (Type 3R only)	**SA**
Auxiliary contacts	**K9**
Isolation switch	**IS**

Standard Onboard Communications

Description	Suffix Number
RS-485 Communications	
BACnet MS/TP = Master slave/token protocol (Universal BACnet) RS-485	**BACnet**
Modbus RTU RS-485, ASCII or RTU, remote terminal unit 32 nodes	**Modbus**
Johnson Controls Metasys N2 network	**N2**
Onboard Ethernet-Based Communications (port left side of keypad)	
BACnet/IP Ethernet industrial protocol	**BACnet**
Modbus/TCP Transmission control protocol (Ethernet-based)	**Modbus**

Technical Data and Specifications

Primary Design Features

Description	IntelliPass	IntelliDisconnect
CB MMP	Standard	Standard
2 contactor bypass	Standard	N/A
Electrical interlock	Standard	N/A
Third contactor (isolation)	Optional	N/A

Description	IntelliPass	IntelliDisconnect
Isolation switch	Optional	N/A
Top entry (power)	Standard	Standard
Bottom entry (power)	Standard	Standard
Output contactor	Standard	Optional

H-Max Series Drives

Description	Specification
Input Ratings	
Input voltage (V_{in})	208, 230, 480 Vac, –10%/+10%
Input frequency (f_{in})	50/60 Hz (variation up to 47–66 Hz)
Connection to power	Once per minute or less (typical operation)
Short-circuit withstand rating	65 kAIC combination
Output Ratings	
Output voltage	0 to V_{in}/U_{in} line voltage in
Continuous output current	Ambient temperature max. 104 °F (40 °C)
I_L overload	1.1 x I_L (1 min./10 min.)
Overload current	110% (1 min./10 min.)
Initial output current	150% for two seconds
Output frequency	0 to 320 Hz
Frequency resolution	0.01 Hz
Control Characteristics	
Control method	Frequency control (V/f) open loop sensorless vector control
Switching frequency	1–310 amps; adjustable with parameter 2.6.9 FS4–FS7: default 6 kHz
Frequency reference	Analog input: Resolution 0.1% (10-bit), accuracy ±1% Panel reference: Resolution 0.01 Hz
Field weakening point	8 to 320 Hz
Acceleration time	0.1 to 3000 seconds
Deceleration time	0.1 to 3000 seconds
Braking torque	DC brake: 30% x T_n
Ambient Conditions	
Ambient operating temperature	FS4–FS7: 14 °F (–10 °C), no frost to 104 °F (40 °C) (Drive can operate at 122 °F (50 °C)
Storage temperature	–40° to 158 °F (–40° to 70 °C)
Relative humidity	0 to 95% RH, noncondensing, non-corrosive, no dripping water
Air quality	Chemical vapors: IEC 60721-3-3, unit in operation, Class 3C2; Mechanical particles: IEC 60721-3-3, unit in operation, Class 3S2
Altitude	100% load capacity (no derating) up to 3280 ft (1000 m); 1% derating for each 328 ft (100 m) above 3280 ft (1000 m); max. 9842 ft (3000 m); 380–480 V
Enclosure class	NEMA Type 1/IP21 or NEMA Type 12/IP54 (keypad required for IP54/Type 12)

Description	Specification
Standards	
EMC	Immunity: Fulfills all EMC immunity requirements; Emissions: EN 61800-3, LEVEL H (EMC C2)
Emissions	EMC level dependent— +EMC 2: EN61800-3 (2004) Category C2 Delivered with Class C2 EMC filtering as default.
Control Connections	
Analog input voltage	0 to 10 V, R = 200 kohms differential Resolution 0.1%; Accuracy ±1% DIP switch selection (voltage/current)
Analog input current	0(4) to 20 mA; R_i –250 ohms differential
Digital inputs (6)	Positive or negative logic; 18 to 30 Vdc
Auxiliary voltage	+24 V ±10%, max. 250 mA
Output reference voltage	+10 V +3%, max. load 10 mA
Analog output	0–10 V, 0(4) to 20 mA; R_L max. 500 ohms; Resolution 10 bit; Accuracy ±2%; DIP switch selection (voltage/current)
Relay outputs	IntelliDisconnect: 2 programmable, 1 Form C, 1 Form A IntelliPass: 1 programmable, 1 Form A With L3 or L4 option, 1 Form A relay is used Switching capacity: 24 Vdc/8 A, 250 Vac/8 A, 125 Vdc/0.4 A
Hard wire jumper	Between terminal 6 and 10 factory default
DIP switch setting default	RS-485 = off A01 = current A12 = current A11 = voltage
Protections	
Overcurrent protection	Yes
Overvoltage protection	Yes
DC bus regulation anti-trip	Yes (accelerates or decelerates the load)
Undervoltage protection	Yes
Earth fault protection	Yes (in case of earth fault in motor or motor cable, only the frequency converter is protected)
Input phase supervision	Yes (trips if any of the input phases are missing)
Motor phase supervision	Yes (trips if any of the output phases are missing)
Overtemperature protection	Yes
Motor overload protection	Yes
Motor stall protection	Yes
Motor underload protection	Yes
Short-circuit protection	Yes
Surge protection	Yes (varistor input)
Conformed coated (varnished) board	Yes (prevents corrosion)

Wiring Diagrams

Control Input/Output, PID Application

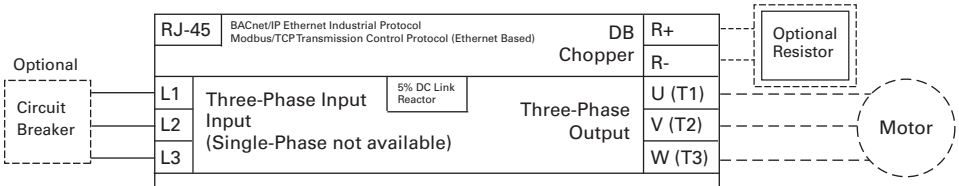

Slot A Terminal		Factory Default Signal
1	+10V	Reference Output
2	AI–1+	Analog Input Voltage (Range 0–10 Vdc) (can be programmed to current 4–20 mA)
3	V_{in}	Analog Output Common (Ground)
4	AI–2+	Analog Input Current (Range 4–20 mA) (can be programmed to voltage 0–10 Vdc) PI Setpoint or Feedback
5	AI–2–	Analog Input Common PI Setpoint or Feedback
6	$24V_{out}$	Control Voltage Output (0.1A max.)
7	GND	I/O Ground
8	DIN1	START/STOP (Contact closed = start)
9	DIN2	External Fault (Closed = fault)
10	DIN3	Run Interlock Permissive IP Interlock (Closed = OK)
11	COM	DIN1–DIN6 Common
12	$24V_{out}$	Control Voltage Output (0.1A max.)
13	GND	I/O Ground
14	DIN4	Speed Select 0–100% (Preset speed)
15	DIN5	Fire Mode (Contact closed = fire mode)
16	DIN6	Force Bypass (Contact closed = bypass)
17	CMB	DIN1–DIN6 Common
18	AO–1+	Output Frequency (0–20 mA)
19	AO–1–	Analog Output Common (Ground)
30	$24\ V_{dcin}$	Auxiliary Input Voltage
A	DATA-	RS-485 DATA- — Programmable BACnet, Modbus, N2
B	DATA+	RS-485 DATA+
21		Relay Board 1 Default Signal RO1 Bypass Run — Slot B
22		
23		
24		24 Vdc/8A 250 Vac/8A 125 Vdc/0.4A
25		RO2 Drive Run
26		
32		RO3 Fault
33		

Resistor

Factory Jumper

Analog

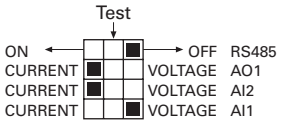

Terminal Block Layout

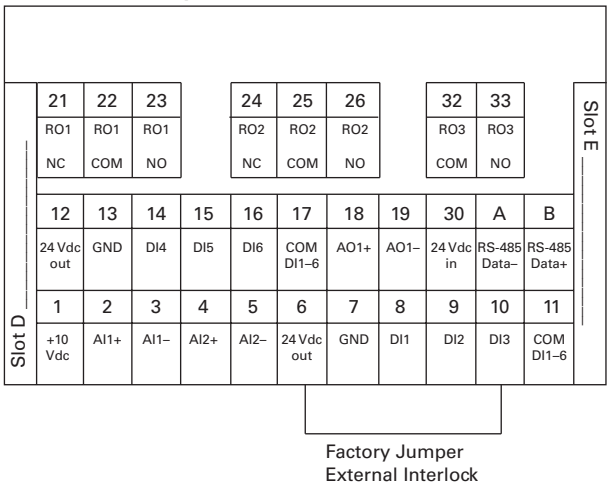

Standards

- Digital inputs D1–D6, relay out, analog in/out are freely programmed
- The user can assign a single input to multiple functions

Includes

- Six digital input
- Two analog input
- One analog output
- Three relay outputs (2 relays are factory wired for bypass operation in IntelliPass configurations)
- RS-485
- Ethernet

Reliability

- Pretested components
- Conformal coated (varnished) boards
- 40 °C rated
- 110% overload for one minute
- Eaton Electrical Services & Systems national network of AF drive specialists

H-Max Series IntelliPass

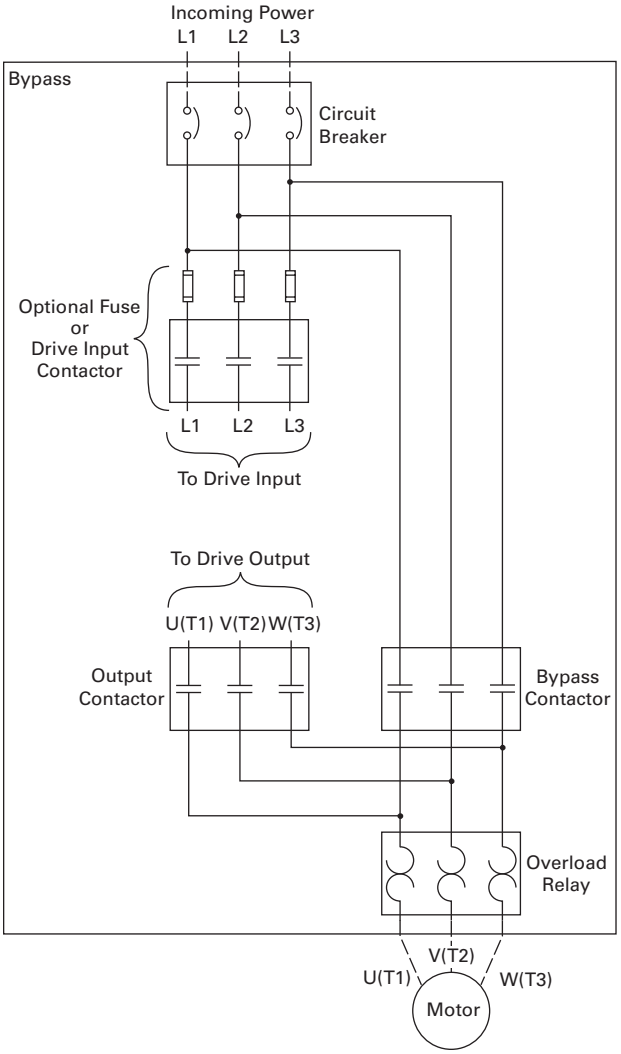

H-Max Series IntelliDisconnect Power Wiring

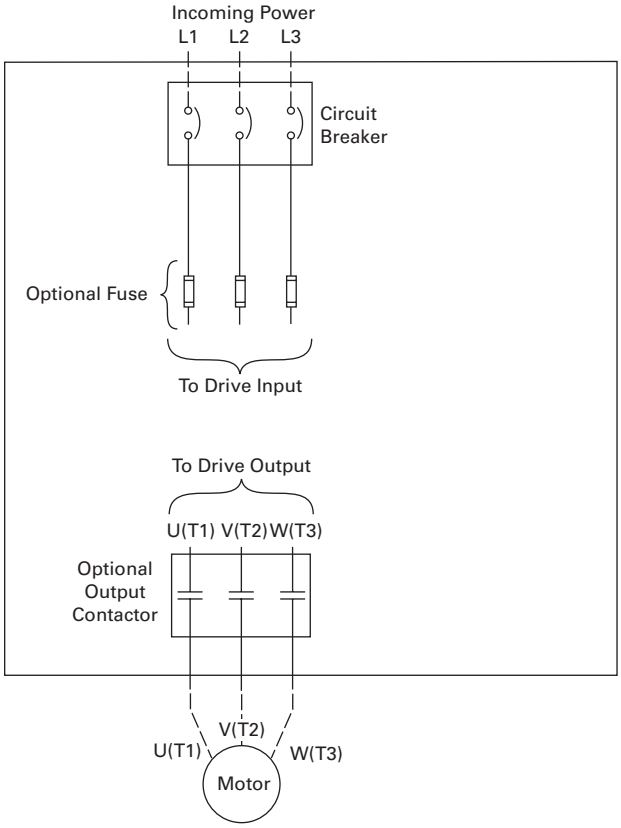

Dimensions

Approximate Dimensions in Inches (mm)

H-Max Series IntelliPass and IntelliDisconnect Drives

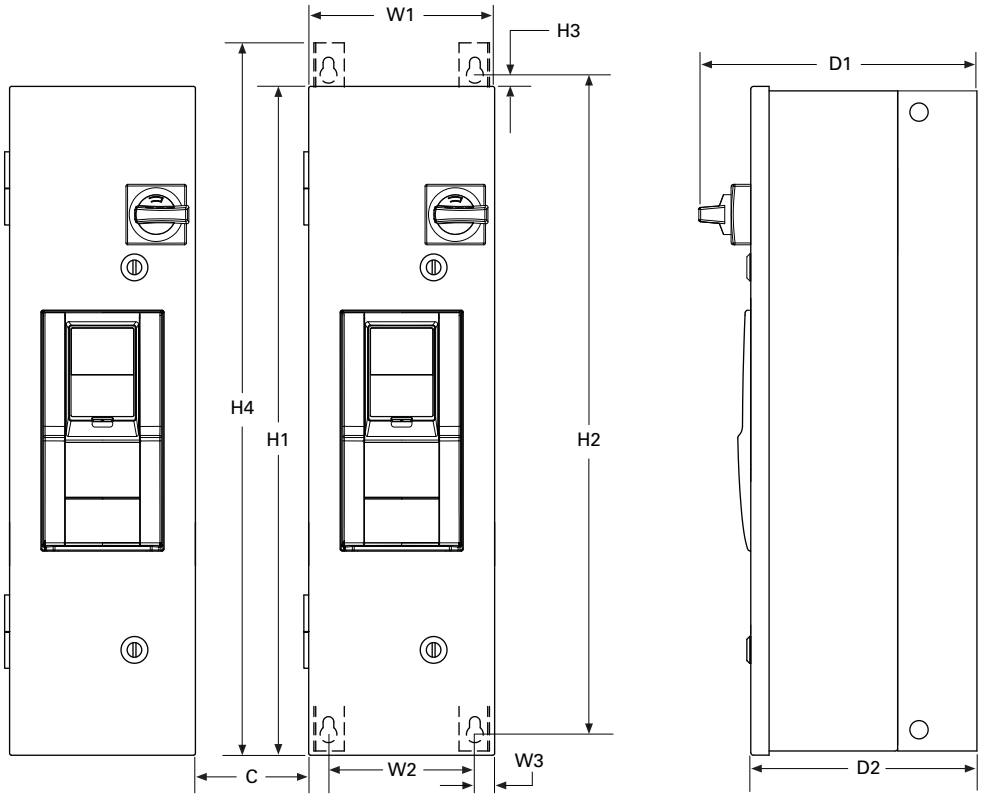

Distance to mount multiple drives.

	Top	Bottom
FR4	4.00 (101.6)	2.00 (50.8)
FR5	4.75 (120.7)	2.50 (63.5)
FR6	6.50 (165.1)	3.25 (82.6)
FR7	10.00 (254.0)	4.00 (101.6)

Consult factory or use manual for final dimensions.

Frame Size	Voltage	Horsepower (I_L)	H1	H2	H3	H4	C	W1	W2	W3	D1	D2	Weight in Lbs (kg)
FS4	208	1–3	30.00 (762.0)	29.41 (747.1)	0.25 (6.35)	31.00 (787.4)	3.00 (76.2)	7.88 (200.2)	6.25 (158.8)	0.75 (19.1)	12.49 (317.2)	10.36 (263.1)	45 (20.41)
	230	1–3											
	480	1–7.5											
FS5	208	5–10	37.00 (939.8)	36.72 (932.7)	0.25 (6.35)	38.31 (973.0)	3.00 (76.2)	9.60 (243.8)	7.97 (202.4)	0.75 (19.1)	15.35 (390.0)	13.22 (335.8)	57.5 (26.10)
	230	5–10											
	480	10–20											
FS6	208	15–20	45.45 (1154.4)	44.81 (1138.2)	0.25 (6.35)	46.4 (1178.6)	4.00 (101.6)	11.44 (290.6)	9.75 (247.6)	0.75 (19.1)	15.80 (401.3)	13.67 (347.2)	98.0 (44.45)
	230	15–20											
	480	25–40											
FS7	208	25–30	58.51 (1486.2)	57.87 (1470.0)	0.25 (6.35)	59.46 (1510.3)	5.00 (127.0)	14.52 (368.8)	12.83 (325.9)	0.75 (19.1)	15.68 (398.3)	13.72 (348.5)	165.0 (74.84)
	230	25–30											
	480	50–75											

Note: C distance is spacing required to mount multiple drives.

Approximate Dimensions in Inches (mm)

Enclosure Box A NEMA Type 3R

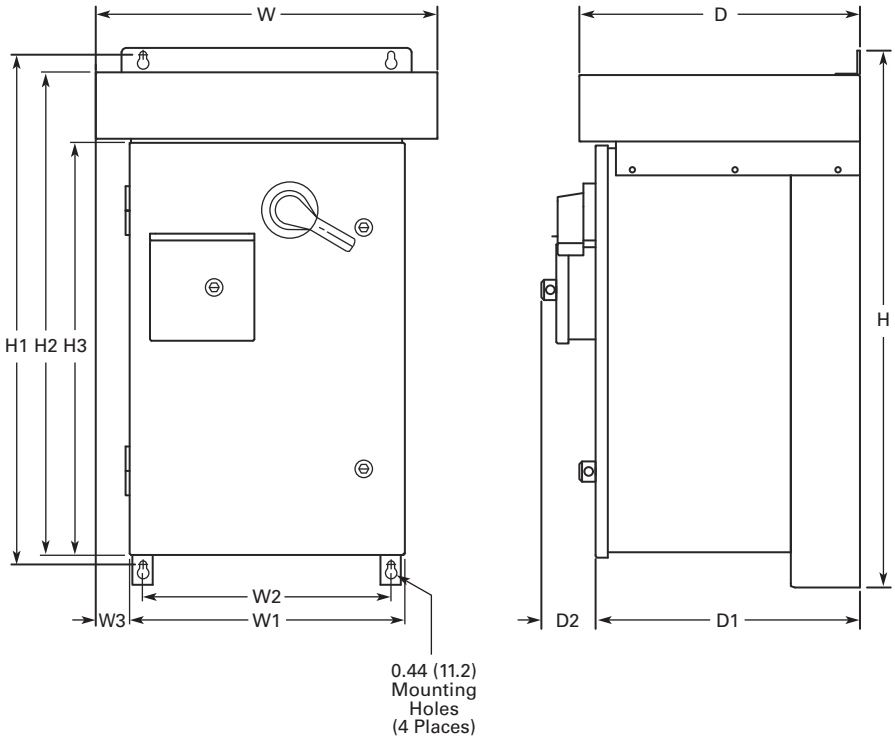

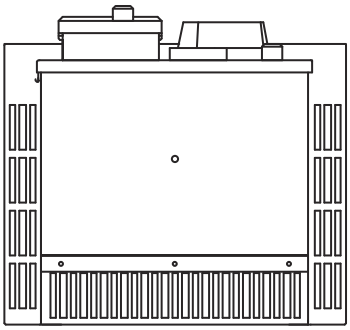

Voltage AC	hp (I_L)	H	H1	H2	H3	W	W1	W2	W3	D	D1	D2	Approx. Weight Lbs (kg)	Approx. Shipping Weight Lbs (kg)
Three-Phase														
208 V	1–10	33.00 (838.2)	31.36 (796.5)	29.67 (753.6)	25.35 (643.9)	21.05 (534.7)	16.92 (429.8)	15.30 (388.6)	2.07 (52.6)	17.24 (437.9)	16.26 (413.0)	3.31 (84.1)	170 (77)	215 (98)
230 V	1–10													
480 V	1–20													

Approximate Dimensions in Inches (mm)

Enclosure Box B NEMA Type 3R

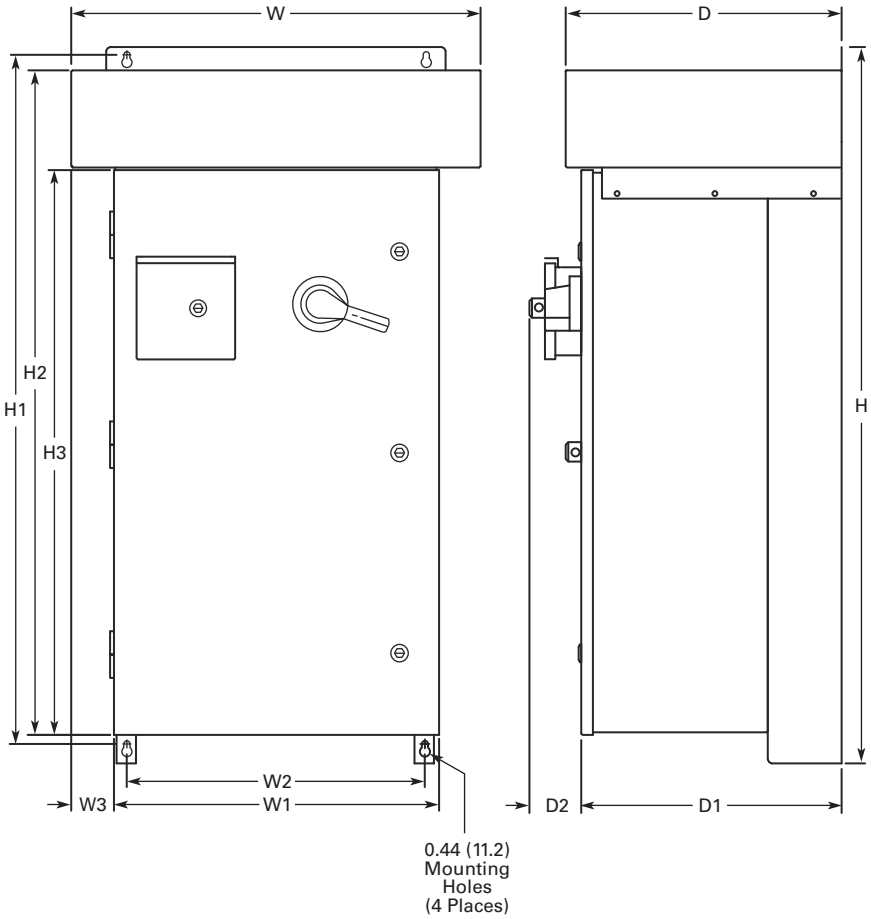

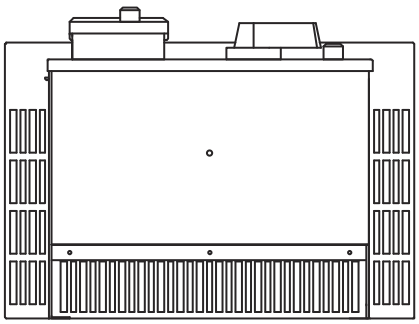

Voltage AC	hp (I_L)	H	H1	H2	H3	W	W1	W2	W3	D	D1	D2	Approx. Weight Lbs (kg)	Approx. Shipping Weight Lbs (kg)
Three-Phase														
208 V	15	46.09 (1170.7)	44.45 (1129.0)	42.77 (1086.4)	36.35 (923.3)	26.31 (668.3)	20.92 (531.4)	19.30 (490.2)	2.69 (68.3)	17.74 (450.6)	16.76 (425.7)	3.31 (84.1)	235 (107)	290 (132)
230 V	15													
480 V	25–40													

Approximate Dimensions in Inches (mm)

Enclosure Box C NEMA Type 3R

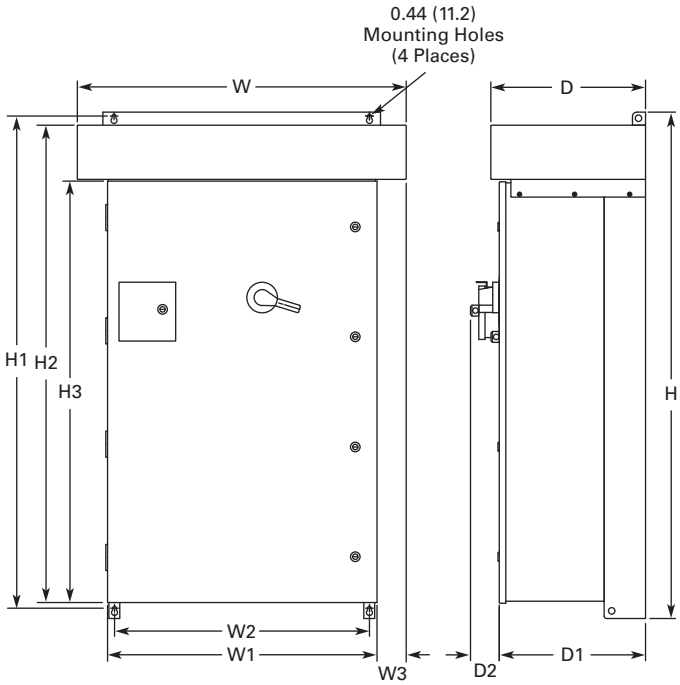

Voltage AC	hp (I_L)	H	H1	H2	H3	W	W1	W2	W3	D	D1	D2	Approx. Weight Lbs (kg)
Three-Phase													
208	20–30	58.09 (1475.5)	56.45 (1433.8)	54.77 (1391.2)	48.35 (1228.1)	37.73 (958.3)	30.92 (785.4)	29.30 (744.2)	3.34 (84.8)	17.74 (450.6)	16.77 (426.0)	3.31 (84.1)	①
230	20–30												
480	50–75												

Note

① Consult factory.

Approximate Dimensions in Inches (mm)

Enclosure Box D

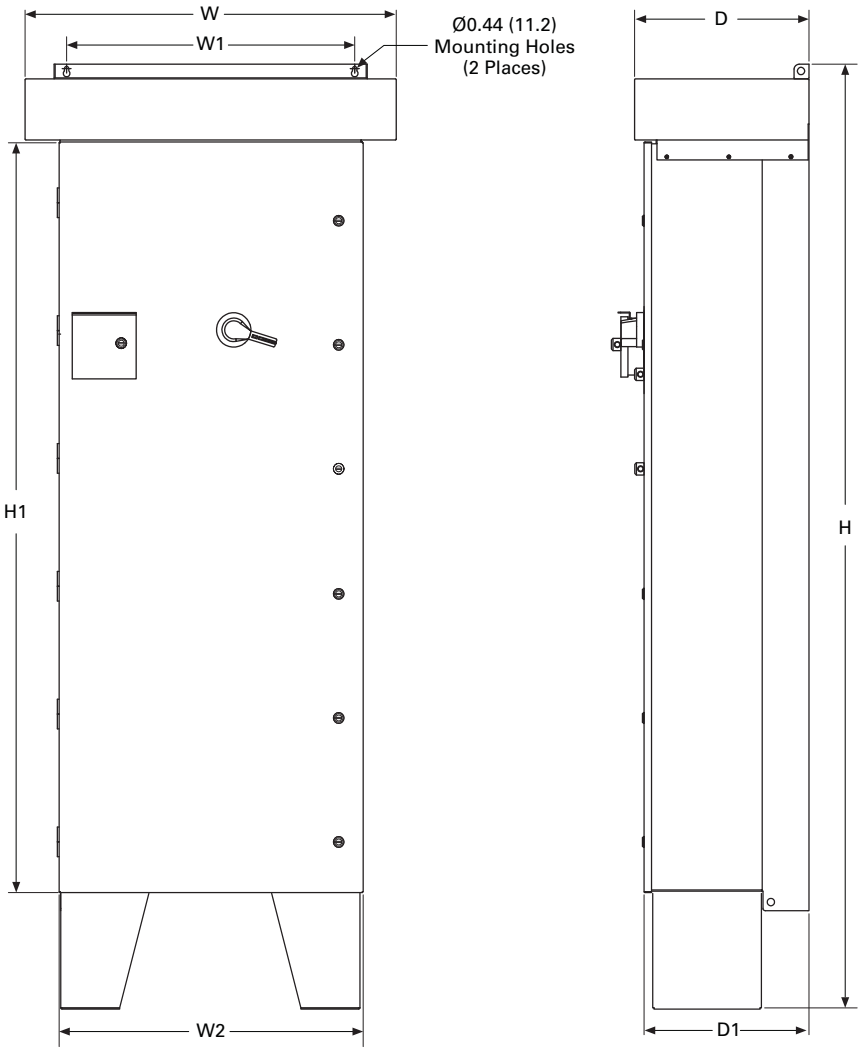

Voltage AC	hp (I_L)	H	H1	W	W1	W2	D	D1	Approx. Weight Lbs (kg)
NEMA Type 12									
208	40–60	80.00 (2032.0)	76.27 (1937.3)	31.00 (787.4)	29.30 (744.2)	30.92 (785.4)	16.76 (425.7)	16.76 (425.7)	850 (386)
230	40–75								
480	100–150								
NEMA Type 3R									
208	40–60	96.00 (2438.4)	76.27 (1937.3)	37.73 (958.3)	29.30 (744.2)	30.92 (785.4)	17.74 (450.6)	16.76 (425.7)	900 (409)
230	40–75								
480	100–150								

Approximate Dimensions in Inches (mm)

Enclosure Box 5

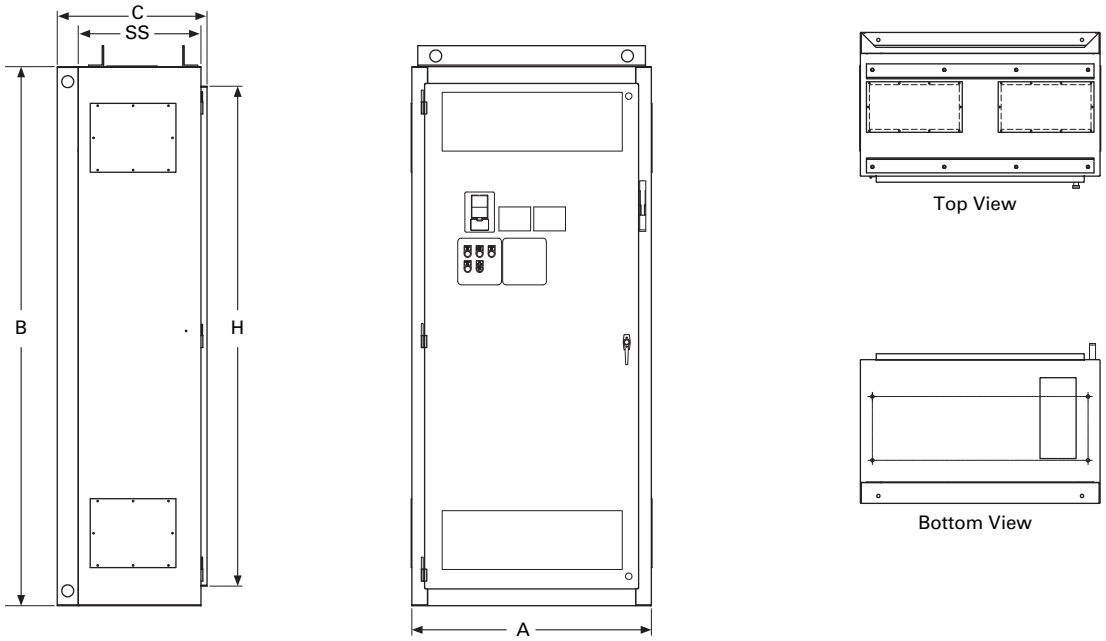

Voltage AC	hp (I_L)	Wide A	High B	Deep C	SS	Mounting D	D1	F	G	Door Height (H)	Approx.Weight Lbs (kg)
Three-phase											
208	75–100	40.00 (1016.0)	90.00 (2286.0)	25.00 (635.0)	20.50 (520.7)	36.00 (914.4)	2.00 (50.8)	8.00 (203.2)	10.80 (274.3)	83.45 (2119.6)	1275 (578)
230	100										
480	200–250										

Approximate Dimensions in Inches (mm)

Enclosure Box F

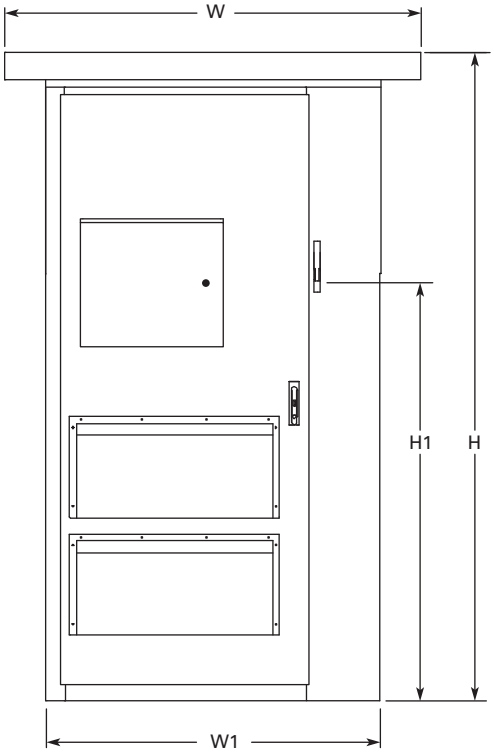

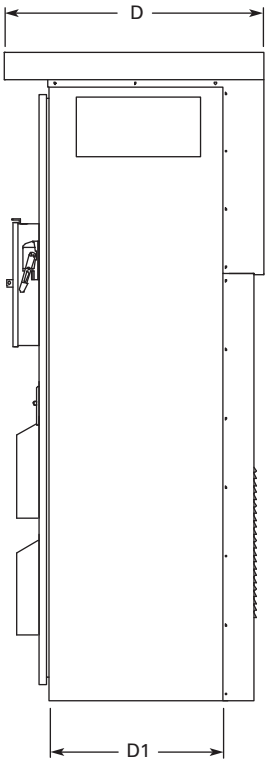

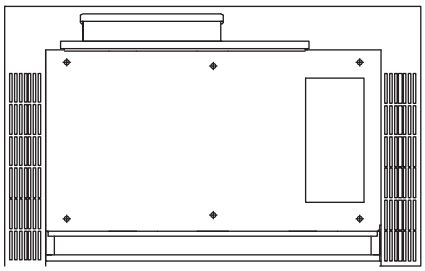

Voltage AC	hp (I_L)	H	H1	W	W1	D	D1	Approx. Weight Lbs (kg)
Three-Phase								
208	75–100	93.58 (2377.0)	69.51 (1765.5)	60.00 (1524.0)	48.00 (1219.2)	37.50 (952.5)	26.00 (660.4)	1700 (772)
230	100							
480	200–250							

SPX Drives

Contents

Description	*Page*
SPX Drives	
Features and Benefits	**V6-T2-205**
Standards and Certifications	**V6-T2-205**
Catalog Number Selection	**V6-T2-206**
Product Selection	**V6-T2-207**
Accessories	**V6-T2-212**
Options	**V6-T2-213**
Replacement Parts	**V6-T2-220**
Technical Data and Specifications	**V6-T2-227**
Dimensions	**V6-T2-228**

Product Description

The SPX Series Adjustable Frequency Drives from Eaton's Electrical Sector are specifically designed for high performance applications. Equipped with high processing power, the SPX can use information from an encoder or a resolver in order to provide very precise motor control. Sensorless vector and simple frequency control are also supported. Typical applications requiring high performance are: master-slave drives, positioning applications, winder tension control and synchronization.

The core of the SPX is a fast microprocessor, providing high dynamic performance for applications where good motor handling and reliability are required. It can be used both in open loop applications as well as in applications requiring encoder feedback.

The SPX supports fast drive-to-drive communication. It also offers an integrated data logger functionality for analysis of dynamic events without the need of additional hardware. Simultaneous fast monitoring of several drives can be done by using the 9000Xdrive tool and CAN communication. In applications where reliability and quality are essential for high-performance, the SPX is the logical choice.

The Eaton family of drives includes DA1, DC1, H-Max, M-Max, SVX and SPX. 9000X Series drive ratings are rated for either high overload (I_H) or low overload (I_L). I_L indicates 110% overload capacity for 1 minute out of 10 minutes. I_H indicates 150% overload capacity for 1 minute out of 10 minutes.

Features and Benefits

- Speed error <0.01%, depending on the encoder
- Incremental or absolute encoder support
- Encoder voltages of 5 V (RS-422), 15 V or 24 V, depending on the option card
- Full torque control at all speeds, including zero
- Torque accuracy <2%; <5% down to zero speed
- Starting torque >200%, depending on motor and drive sizing
- Integrated datalogger for system analysis
- Fast multiple drive monitoring with PC
- Full capability for master/slave configurations
- High-speed bus (12 Mbit/s) for fast inter-drive communication
- High-speed applications (up to 7200 Hz) possible with special software
- Robust design—proven 500,000 hours MTBF
- Integrated 3% line reactors standard on drives from FR4 through FR9
- Line reactor is included but is separated from chassis
- EMI/RFI Filters H standard up to 200 hp I_H 480 V, 100 hp I_H 230 V
- Simplified operating menu allows for typical programming changes, while programming mode provides control of everything
- Quick Start Wizard built into the programming of the drive ensures a smooth start-up
- Keypad can display up to three monitored parameters simultaneously
- LOCAL/REMOTE operation from keypad
- Copy/paste function allows transfer of parameter settings from one drive to the next
- Standard NEMA Type 12/IP54 keypad on all drives
- Hand-held auxiliary 240 power supply allows programming/monitoring of control module without applying full power to the drive
- The SPX can be flexibly adapted to a variety of needs using our pre-installed "Seven in One" precision application programs consisting of:
  - Basic
  - Standard
  - Local/remote
  - Multi-step speed control
  - PID control
  - Multi-purpose control
  - Pump and fan control with auto change
- Additional I/O and communication cards provide plug and play functionality
- I/O connections with simple quick connection terminals
- Control logic can be powered from an external auxiliary control panel, internal drive functions and fieldbus if necessary
- Brake chopper standard from: 1–30 hp/380–500 V 3/4–15 hp/208–230 V
- NEMA Type 1/IP21 enclosures available Frame Sizes FR4–FR11, NEMA Type 12/IP54 enclosures available Frame Sizes FR4–FR10 (FR10 and FR11 freestanding drives)
- Open chassis FR10 and greater
- Standard option board configuration includes an A9 I/O board and an A2 relay output board installed in slots A and B

Standards and Certifications

Product

- IEC 61800-2

Safety

- UL 508C

EMC (at default settings)

- Immunity: Fulfills all EMC immunity requirements; Emissions: EN 61800-3, LEVEL H

- UL Listed
- CE

Catalog Number Selection

SPX Adjustable Frequency Drives

2

SPX 010 A 1 – 4 A 1 B 1 _ _ _ _ _ _

Product Family

SPX = Open drives

Horsepower Rating

F07 = 3/4	**125** = 125
001 = 1	**150** = 150
F15 = 1-1/2	**250** = 250
002 = 2	**300** = 300
003 = 3	**350** = 350
004 = 5 (I_L)	**400** = 400
005 = 5	**500** = 500
006 = 7-1/2 (I_L)	**550** = 550
007 = 7-1/2	**600** = 600
010 = 10	**650** = 650
015 = 15	**700** = 700
020 = 20	**800** = 800
025 = 25	**900** = 900
030 = 30	**H10** = 1000
040 = 40	**H12** = 1200
050 = 50	**H13** = 1350
060 = 60	**H15** = 1500
075 = 75	**H16** = 1600
100 = 100	**H20** = 2000

AFD Software Series

A = Standard software

Enclosure ③

0 = Chassis
1 = NEMA Type 1/IP21
2 = NEMA Type 12/IP54

Voltage Rating

2 = 230 V (208–240)
4 = 480 V (380–500)
5 = 575 V (525–690)

Keypad

A = Alphanumeric

Input Options ①

1 = Three-phase, EMC H
2 = Three-phase, EMC N
3 = Three-phase, EMC T
4 = Three-phase, EMC L

Brake Chopper Options ②

N = No brake chopper circuit
B = Internal brake chopper circuit

Board Modifications

1 = Standard boards
2 = Conformal (varnished) coating ④

Options

Options appear in alphabetical order.

Extended I/O Card Options

A3 = 2 RO, Therm
A4 = Encoder low volt +5 V/15 V24 V
A5 = Encoder high volt +15 V/24 V
A7 = Double Encoder
A8 = 6 DI, 1 DO, 2 AI, 1 AO
AE = 3 DI (Encoder 10–24 V), Out +15 V/+24 V 2 DO (pulse + direction)
B1 = 6 DI, 1 ext +24 Vdc/EXT +24 Vdc
B2 = 1 RO (NC-NO), 1 RO (NO), 1 therm
B4 = 1 AI (mA isolated), 2 AO (mA isolated), 1 ext +24 Vdc/EXT + 24 Vdc
B5 = 3 RO (NO)
B8 = 1 ext +24 Vdc/EXT +24 Vdc, 3 Pt100
B9 = 1 RO (NO), 5 DI 42–240 Vac input
BB = SPI, absolute encoder

Communication Cards

CA = Johnson Controls N2	**C5** = PROFIBUS DP (D9 connector)
CI = Modbus TCP	**C6** = CANopen (slave)
CJ = BACnet	**C7** = DeviceNet
CQ = EtherNet/IP	**C8** = Modbus (D9 type connector)
C2 = Modbus	**D1** = Adapter—SPX only
C3 = PROFIBUS DP	**D2** = Adapter—SPX only
C4 = LonWorks	**D3** = RS-232 with D9 connection

Notes

① All 230 V drives and 480 V drives up to 200 hp (I_H) are only available with input option **1** (EMC level H). 480 V drives 250 hp (I_H) or larger are available with input option **2** (EMC level N). 575 V drives 200 hp (I_H) or larger are available with input option **2**. 575 V drives up to 150 hp (I_H) are available with input option **4** (EMC level L). 480 V and 690 V freestanding drives are available with input option **4** (EMC level L).

② 480 V drives up to 30 hp (I_H) are only available with brake chopper option **B**. 480 V drives 40 hp (I_H) or larger come standard with brake chopper option **N**. 230 V drives up to 15 hp (I_H) are only available with brake chopper option **B**. 230 V drives 20 hp and larger come standard with brake chopper option **N**. All 575 V drives come standard without brake chopper option (**N**). **N** = **No** brake chopper.

③ 480 V drives 250–350 hp (I_H) and 690 V drives 200–300 hp (I_H) are available with enclosure style **0** (chassis). 480 V and 690 V FR10 freestanding drives are available with **1** (NEMA Type 1/IP21) or **2** (NEMA Type 12/IP54). FR11 freestanding drives are only available with enclosure style **1** (NEMA Type 1/IP21).

④ Factory promise delivery. Consult sales office for availability.

⑤ For High-Resistance Ground systems, any SVX/SPX drive can be used if the HRG system has ground supervision. If no ground supervision feature is available, use EMC class N or T.

Product Selection

230 V Drives

SPX Open Drives

208–240 V, NEMA Type 1/IP21 Drives

Frame Size	hp (I_H)	Current (I_H)	hp (I_L)	Current (I_L)	Catalog Number
FR4	3/4	3.7	1	4.8	**SPXF07A1-2A1B1**
	1	4.8	1-1/2	6.6	**SPX001A1-2A1B1**
	1-1/2	6.6	2	7.8	**SPXF15A1-2A1B1**
	2	7.8	3	11	**SPX002A1-2A1B1**
	3	11	—	12.5	**SPX003A1-2A1B1**
FR5	—	12.5	5	17.5	**SPX004A1-2A1B1**
	5	17.5	7-1/2	25	**SPX005A1-2A1B1**
	7-1/2	25	10	31	**SPX007A1-2A1B1**
FR6	10	31	15	48	**SPX010A1-2A1B1**
	15	48	20	61	**SPX015A1-2A1B1**
FR7	20	61	25	75	**SPX020A1-2A1N1**
	25	75	30	88	**SPX025A1-2A1N1**
	30	88	40	114	**SPX030A1-2A1N1**
FR8	40	114	50	140	**SPX040A1-2A1N1**
	50	140	60	170	**SPX050A1-2A1N1**
	60	170	75	205	**SPX060A1-2A1N1**
FR9	75	205	100	261	**SPX075A1-2A1N1**
	100	261	—	—	**SPX100A1-2A1N1**

208–240 V, NEMA Type 12/IP54 Drives

Frame Size	hp (I_H)	Current (I_H)	hp (I_L)	Current (I_L)	Catalog Number
FR4	3/4	3.7	1	4.8	**SPXF07A2-2A1B1**
	1	4.8	1-1/2	6.6	**SPX001A2-2A1B1**
	1-1/2	6.6	2	7.8	**SPXF15A2-2A1B1**
	2	7.8	3	11	**SPX002A2-2A1B1**
	3	11	—	12.5	**SPX003A2-2A1B1**
FR5	—	12.5	5	17.5	**SPX004A2-2A1B1**
	5	17.5	7-1/2	25	**SPX005A2-2A1B1**
	7-1/2	25	10	31	**SPX007A2-2A1B1**
FR6	10	31	15	48	**SPX010A2-2A1B1**
	15	48	20	61	**SPX015A2-2A1B1**
FR7	20	61	25	75	**SPX020A2-2A1N1**
	25	75	30	88	**SPX025A2-2A1N1**
	30	88	40	114	**SPX030A2-2A1N1**
FR8	40	114	50	140	**SPX040A2-2A1N1**
	50	140	60	170	**SPX050A2-2A1N1**
	60	170	75	205	**SPX060A2-2A1N1**
FR9	75	205	100	261	**SPX075A2-2A1N1**
	100	261	—	—	**SPX100A2-2A1N1**

480 V Drives

SPX Open Drives

380–500 V, NEMA Type 1/IP21 Drives

Frame Size	hp (I_H)	Current (I_H)	hp (I_L)	Current (I_L)	Catalog Number
FR4	1	2.2	1-1/2	3.3	**SPX001A1-4A1B1**
	1-1/2	3.3	2	4.3	**SPXF15A1-4A1B1**
	2	4.3	3	5.6	**SPX002A1-4A1B1**
	3	5.6	5	7.6	**SPX003A1-4A1B1**
	5	7.6	—	9	**SPX005A1-4A1B1**
	—	9	7-1/2	12	**SPX006A1-4A1B1**
FR5	7-1/2	12	10	16	**SPX007A1-4A1B1**
	10	16	15	23	**SPX010A1-4A1B1**
	15	23	20	31	**SPX015A1-4A1B1**
FR6	20	31	25	38	**SPX020A1-4A1B1**
	25	38	30	46	**SPX025A1-4A1B1**
	30	46	40	61	**SPX030A1-4A1B1**
FR7	40	61	50	72	**SPX040A1-4A1N1**
	50	72	60	87	**SPX050A1-4A1N1**
	60	87	75	105	**SPX060A1-4A1N1**
FR8	75	105	100	140	**SPX075A1-4A1N1**
	100	140	125	170	**SPX100A1-4A1N1**
	125	170	150	205	**SPX125A1-4A1N1**
FR9	150	205	200	261	**SPX150A1-4A1N1**
	200	245	250	300	**SPX200A1-4A1N1**

380–500 V, NEMA Type 1/IP21 Freestanding Drives

Frame Size	hp (I_H)	Current (I_H)	hp (I_L)	Current (I_L)	Catalog Number
FR10	250	330	300	385	**SPX250A1-4A4N1**
	300	385	350	460	**SPX300A1-4A4N1**
	350	460	400	520	**SPX350A1-4A4N1**
FR11	400	520	500	590	**SPX400A1-4A4N1**
	500	590	550	650	**SPX500A1-4A4N1**
	550	650	600	730	**SPX550A1-4A4N1**

Note

Integrated fuses as standard. Limited option selection available; 115 V transformer (KB), light kit (L1), HOA (K4), speed potentiometer w/HOA (K2), Disconnect switch (P2). See Freestanding Option selection on **Page V6-T2-219**.

SPX Open Drives

380–500 V, NEMA Type 12/IP54 Drives

Frame Size	hp (I_H)	Current (I_H)	hp (I_L)	Current (I_L)	Catalog Number
FR4	1	2.2	1-1/2	3.3	**SPX001A2-4A1B1**
	1-1/2	3.3	2	4.3	**SPXF15A2-4A1B1**
	2	4.3	3	5.6	**SPX002A2-4A1B1**
	3	5.6	5	7.6	**SPX003A2-4A1B1**
	5	7.6	—	9	**SPX005A2-4A1B1**
	—	9	7-1/2	12	**SPX006A2-4A1B1**
FR5	7-1/2	12	10	16	**SPX007A2-4A1B1**
	10	16	15	23	**SPX010A2-4A1B1**
	15	23	20	31	**SPX015A2-4A1B1**
FR6	20	31	25	38	**SPX020A2-4A1B1**
	25	38	30	46	**SPX025A2-4A1B1**
	30	46	40	61	**SPX030A2-4A1B1**
FR7	40	61	50	72	**SPX040A2-4A1N1**
	50	72	60	87	**SPX050A2-4A1N1**
	60	87	75	105	**SPX060A2-4A1N1**
FR8	75	105	100	140	**SPX075A2-4A2N1**
	100	140	125	170	**SPX100A2-4A1N1**
	125	170	150	205	**SPX125A2-4A1N1**
FR9	150	205	200	261	**SPX150A2-4A1N1**
	200	245	250	300	**SPX200A2-4A1N1**

380–500 V, NEMA Type 12/IP54 Freestanding Drives

Frame Size	hp (I_H)	Current (I_H)	hp (I_L)	Current (I_L)	Catalog Number
FR10	250	330	300	385	**SPX250A2-4A4N1**
	300	385	350	460	**SPX300A2-4A4N1**
	350	460	400	520	**SPX350A2-4A4N1**

380–500 V, Open Chassis Drives

Frame Size	hp (I_H)	Current (I_H)	hp (I_L)	Current (I_L)	Catalog Number
FR10	250	330	300	385	**SPX250A0-4A2N1**
	300	385	—	460	**SPX300A0-4A2N1**
	350	460	400	520	**SPX350A0-4A2N1**
FR11	400	520	500	590	**SPX400A0-4A2N1**
	500	590	—	650	**SPX500A0-4A2N1**
	—	650	600	730	**SPX550A0-4A2N1**
FR12	600	730	—	820	**SPX600A0-4A2N1**
	—	820	700	920	**SPX650A0-4A2N1**
	700	920	800	1030	**SPX700A0-4A2N1**
FR13	800	1030	900	1150	**SPX800A0-4A2N1**
	900	1150	1000	1300	**SPX900A0-4A2N1**
	1000	1300	1200	1450	**SPXH10A0-4A2N1**
FR14	1200	1600	1500	1770	**SPXH12A0-4A2N1**
	1600	1940	1800	2150	**SPXH16A0-4A2N1**

Notes

Integrated fuses as standard. Limited option selection available; 115 V transformer (KB), light kit (L1), HOA (K4), speed potentiometer w/HOA (K2), disconnect switch (P2). See Freestanding Option selection on **Page V6-T2-219**.

① FR10–FR14 includes 3% line reactor, but it is not integral to chassis.

575 V Drives

SPX Open Drives

525–690 V, NEMA Type 1/IP21 Drives

Frame Size	hp (I_H)	Current (I_H)	hp (I_L)	Current (I_L)	Catalog Number
FR6	2	3.3	3	4.5	**SPX002A1-5A4N1**
	3	4.5	—	5.5	**SPX003A1-5A4N1**
	—	5.5	5	7.5	**SPX004A1-5A4N1**
	5	7.5	7-1/2	10	**SPX005A1-5A4N1**
	7-1/2	10	10	13.5	**SPX007A1-5A4N1**
	10	13.5	15	18	**SPX010A1-5A4N1**
	15	18	20	22	**SPX015A1-5A4N1**
	20	22	25	27	**SPX020A1-5A4N1**
	25	27	30	34	**SPX025A1-5A4N1**
FR7	30	34	40	41	**SPX030A1-5A4N1**
	40	41	50	52	**SPX040A1-5A4N1**
FR8	50	52	60	62	**SPX050A1-5A4N1**
	60	62	75	80	**SPX060A1-5A4N1**
	75	80	100	100	**SPX075A1-5A4N1**
FR9	100	100	125	125	**SPX100A1-5A4N1**
	125	125	150	144	**SPX125A1-5A4N1**
	150	144	—	170	**SPX150A1-5A4N1**
	—	170	200	208	**SPX175A1-5A4N1**

525–690 V, NEMA Type 1/IP21 Freestanding Drives

Frame Size	hp (I_H)	Current (I_H)	hp (I_L)	Current (I_L)	Catalog Number
FR10	200	208	250	261	**SPX200A1-5A4N1**
	250	261	300	325	**SPX250A1-5A4N1**
	300	325	400	385	**SPX300A1-5A4N1**
FR11	400	385	450	460	**SPX400A1-5A4N1**
	450	460	500	502	**SPX450A1-5A4N1**
	500	502	550	590	**SPX500A1-5A4N1**

Note

Integrated fuses as standard. Limited option selection available; 115 V transformer (KB), light kit (L1), HOA (K4), speed potentiometer w/HOA (K2), disconnect switch (P2). See Freestanding Option selection on **Page V6-T2-219**.

SPX Open Drives

525–690 V, NEMA Type 12/IP54 Drives

Frame Size	hp (I_H)	Current (I_H)	hp (I_L)	Current (I_L)	Catalog Number
FR6	2	3.3	3	4.5	**SPX002A2-5A4N1**
	3	4.5	—	5.5	**SPX003A2-5A4N1**
	—	5.5	5	7.5	**SPX004A2-5A4N1**
	5	7.5	7-1/2	10	**SPX005A2-5A4N1**
	7-1/2	10	10	13.5	**SPX007A2-5A4N1**
	10	13.5	15	18	**SPX010A2-5A4N1**
	15	18	20	22	**SPX015A2-5A4N1**
	20	22	25	27	**SPX020A2-5A4N1**
	25	27	30	34	**SPX025A2-5A4N1**
FR7	30	34	40	41	**SPX030A2-5A4N1**
	40	41	50	52	**SPX040A2-5A4N1**
FR8	50	52	60	62	**SPX050A2-5A4N1**
	60	62	75	80	**SPX060A2-5A4N1**
	75	80	100	100	**SPX075A2-5A4N1**
FR9	100	100	125	125	**SPX100A2-5A4N1**
	125	125	150	144	**SPX125A2-5A4N1**
	150	144	—	170	**SPX150A2-5A4N1**
	—	170	200	208	**SPX175A2-5A4N1**

525–690 V, NEMA Type 12/IP54 Freestanding Drives

Frame Size	hp (I_H)	Current (I_H)	hp (I_L)	Current (I_L)	Catalog Number
FR10	200	208	250	261	**SPX200A2-5A4N1**
	250	261	300	325	**SPX250A2-5A4N1**
	300	325	400	385	**SPX300A2-5A4N1**

525–690 V, Open Chassis Drives

Frame Size	hp (I_H)	Current (I_H)	hp (I_L)	Current (I_L)	Catalog Number
FR10	200	208	250	261	**SPX200A0-5A2N1**
	250	261	300	325	**SPX250A0-5A2N1**
	300	325	400	385	**SPX300A0-5A2N1**
FR11	400	385	450	460	**SPX400A0-5A2N1**
	450	460	500	502	**SPX450A0-5A2N1**
	500	502	—	590	**SPX500A0-5A2N1**
FR12	—	590	600	650	**SPX550A0-5A2N1**
	600	650	700	750	**SPX600A0-5A2N1**
	700	750	800	820	**SPX700A0-5A2N1**
FR13	800	820	900	920	**SPX800A0-5A2N1**
	900	920	1000	1030	**SPX900A0-5A2N1**
	1000	1030	1250	1180	**SPXH10A0-5A2N1**
FR14	1350	1300	1500	1500	**SPXH13A0-5A2N1**
	1500	1500	2000	1900	**SPXH15A0-5A2N1**
	2000	1900	2300	2250	**SPXH20A0-5A2N1**

Notes

Integrated fuses as standard. Limited option selection available; 115 V transformer (KB), light kit (L1), HOA (K4), speed potentiometer w/HOA (K2), disconnect switch (P2). See Freestanding Option selection on **Page V6-T2-219**.

① FR10–FR14 includes 3% line reactor, but it is not integral to chassis.

Accessories

Demo Drive and Power Supply

Demo Drive and Power Supply

Description	Catalog Number
9000X demo drive	**9000XDEMO**

9000X Series—SVX/SPX Conversion and Flange Kits

The Type 12/IP54 option kit is used to convert a Type 1/IP21 to a Type 12/IP54 drive. The kit includes:

NEMA Type 12 / IP54 Conversion Kits

Frame Size	Catalog Number
Frame 4 Type 12/IP54 kit	**OPTN12FR4**
Frame 5 Type 12/IP54 kit	**OPTN12FR5**
Frame 6 Type 12/IP54 kit	**OPTN12FR6**

Flange Kits

The flange kit is used when the power section heat sink is mounted through the back panel of an enclosure. The kit includes hardware and supporting steel plates.

NEMA Type 12 / IP54 Conversion Kits

Kit

Frame Size	Catalog Number
Frame 4 flange kit Type 12/IP54	**OPTTHR4**
Frame 5 flange kit Type 12/IP54	**OPTTHR5**
Frame 6 flange kit Type 12/IP54	**OPTTHR6**
Frame 7 flange kit Type 12/IP54	**OPTTHR7**
Frame 8 flange kit Type 12/IP54	**OPTTHR8**
Frame 9 flange kit Type 12/IP54	**OPTTHR9**

Options

9000X Series Option Board Kits

The 9000X Series drives can accommodate a wide selection of expander and adapter option boards to customize the drive for your application needs. The drive's control unit is designed to accept a total of five option boards.

The 9000X Series factory installed standard board configuration includes an A9 I/O board and an A2 relay output board, which are installed in slots A and B.

Option Boards

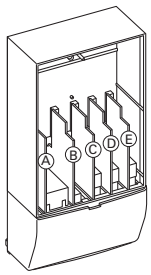

Option Board Kits

Option Kit Description ①	Allowed Slot Locations ②	Field Installed Catalog Number	Factory Installed Option Designator	SVX Ready Programs Basic	Local/ Remote	Standard	MSS	PID	Multi-P.	PFC
Standard I/O Cards										
6 DI, 1 DO, 2 AI, 1 AO, 1 +10 Vdc ref, 2 ext +24 Vdc/EXT +24 Vdc	A	**OPTA9**	—	■	■	■	■	■	■	■
2 RO (NC-NO)	B	**OPTA2**	—	■	■	■	■	■	■	■
Extended I/O Cards										
2 RO, therm	B	**OPTA3**	**A3**	—	■	■	■	■	■	■
Encoder low volt +5 V/15 V/24 V	C	**OPTA4**	**A4**	—	■	■	■	■	■	■
Encoder high volt +15 V/24 V	C	**OPTA5**	**A5**	—	■	■	■	■	■	■
Double encoder—SPX only	C	**OPTA7**	**A7**	■	■	■	■	■	■	■
6 DI, 1 DO, 2 AI, 1 AO	A	**OPTA8**	**A8**	—	■	■	■	■	■	■
6 DI, 1 DO, 2 AI, 1 AO, 1 +10 Vdc ref, 2 ext +24 Vdc/EXT +24 Vdc	A	**OPTA1**	—	■	■	■	■	■	■	■
3 DI (encoder 10–24 V), out +15 V/+24 V, 2 DO (pulse+direction)—SPX only	C	**OPTAE**	**AE**	■	■	■	■	■	■	■
6 DI, 1 DO, 2 AI, 1 AO, 1 +10 Vdc ref, 2 ext +24 Vdc/EXT +24 Vdc	A	**OPTAFA1**	—	■	■	■	■	■	■	■
6 DI, 1 ext +24 Vdc/EXT +24 Vdc	B, C, **D**, E	**OPTB1**	**B1**	—	—	—	—	—	■	■
1 RO (NC-NO), 1 RO (NO), 1 therm	B, C, **D**, E	**OPTB2**	**B2**	—	—	—	—	—	■	■
1 AI (mA isolated), 2 AO (mA isolated), 1 ext +24 Vdc/EXT +24 Vdc	B, C, **D**, E	**OPTB4**	**B4**	—	■	■	■	■	■	■
3 RO (NO)	B, C, **D**, E	**OPTB5**	**B5**	—	—	—	—	—	■	■
1 ext +24 Vdc/EXT +24 Vdc, 3 Pt100	B, C, **D**, E	**OPTB8**	**B8**	—	—	—	—	—	—	—
1 RO (NO), 5 DI 42–240 Vac input	B, C, **D**, E	**OPTB9**	**B9**	—	—	—	—	—	■	■
SPI, absolute encoder	C	**OPTBB**	**BB**	—	—	—	—	—	—	—
Communication Cards										
Modbus RTU	D, E	OPTC2	C2	■	■	■	■	■	■	■
Modbus RTU (D9 connector)	D, E	OPTC8	C8	■	■	■	■	■	■	■
PROFIBUS DP	D, E	OPTC3	C3	■	■	■	■	■	■	■
PROFIBUS DP (D9 connector)	D, E	OPTC5	C5	■	■	■	■	■	■	■
Johnson Controls N2	D, E	OPTC2	CA	—	—	—	—	—	—	—
BACnet MSTP	D, E	OPTCJ	CJ	■	■	■	■	■	■	■
LonWorks	D, E	OPTC4	C4	■	■	■	■	■	■	■
CANopen (slave)	D, E	OPTC6	C6	■	■	■	■	■	■	■
DeviceNet	D, E	OPTC7	C7	■	■	■	■	■	■	■
Modbus TCP	D, E	OPTCI	CI	■	■	■	■	■	■	■
EtherNet/IP	D, E	OPTCQ	CQ	■	■	■	■	■	■	■
PROFINET, Modbus TCP, EtherNet/IP (dual-port) ④	D, E	OPTE9	E9	■	■	■	■	■	■	■
EtherCAT (dual-port) ④	D, E	OPTEC	EC	■	■	■	■	■	■	■
SPX adapter	D, E	OPTD1	D1	■	■	■	■	■	■	■
SPX adapter	D, E	OPTD2	D2	■	■	■	■	■	■	■
RS-232 adapter	D, E	OPTD3	D3	■	■	■	■	■	■	■

Notes

① AI = Analog Input; AO = Analog Output, DI = Digital Input, DO = Digital Output, RO = Relay Output

② Option card must be installed in one of the slots listed for that card. Slot indicated in bold is the preferred location.

③ OPTC2 is a multi-protocol option card.

Modbus RTU Network Communications

The Modbus Network Card OPTC2 is used for connecting the SVX Drive as a slave on a Modbus network. The interface is connected by a 9-pin DSUB connector (female) and the baud rate ranges from 300 to 19,200 baud. Other communication parameters include an address range from 1 to 247; a parity of None, Odd or Even; and the stop bit is 1.

PROFIBUS Network Communications

The PROFIBUS Network Card OPTC3 is used for connecting the SVX Drive as a slave on a PROFIBUS-DP network. The interface is connected by a 9-pin DSUB connector (female). The baud rates range from 9.6 Kbaud to 12 Mbaud, and the addresses range from 1 to 127.

LonWorks Network Communications

The LonWorks Network Card OPTC4 is used for connecting the SVX Drive on a LonWorks network. This interface uses Standard Network Variable Types (SNVT) as data types. The channel connection is achieved using a FTT-10 A Free Topology transceiver via a single twisted transfer cable. The communication speed with LonWorks is 78 kBits/s.

CANopen (Slave) Communications

The CANopen (Slave) Network Card OPTC6 is used for connecting the SVX Drive to a host system. According to ISO11898 standard cables to be chosen for CANbus should have a nominal impedance of 120 ohms, and specific line delay of nominal 5 nS/m. 120 ohms line termination resistors required for installation.

DeviceNet Network Communications

The DeviceNet Network Card OPTC7 is used for connecting the SVX Drive on a DeviceNet Network. It includes a 5.08 mm pluggable connector. Transfer method is via CAN using a two-wire twisted shielded cable with two-wire bus power cable and drain. The baud rates used for communication include 125 Kbaud, 250 Kbaud and 500 Kbaud.

Johnson Controls Metasys N2 Network Communications

The OPTC2 fieldbus board provides communication between the SVX Drive and a Johnson Controls Metasys™ N2 network. With this connection, the drive can be controlled, monitored and programmed from the Metasys system. The N2 fieldbus is available as a factory installed option and as a field installable kit.

Modbus/TCP Network Communications

The Modbus/TCP Network Card OPTCI is used for connecting the SVX Drive to Ethernet networks utilizing Modbus protocol. It includes an RJ-45 pluggable connector. This interface provides a selection of standard and custom register values to communicate drive parameters. The board supports 10 Mbps and 100 Mbps communication speeds. The IP address of the board is configurable over Ethernet using a supplied software tool.

BACnet Network Communications

The BACnet Network Card OPTCJ is used for connecting the SVX Drive to BACnet networks. It includes a 5.08 mm pluggable connector. Data transfer is Master-Slave/Token Passing (MS/TP) RS-485. This interface uses a collection of 30 Binary Value Objects (BVOs) and 35 Analog Value Objects (AVOs) to communicate drive parameters. The card supports 9.6, 19.2 and 38.4 Kbaud communication speeds and supports network addresses 1–127.

EtherNet/IP Network Communications

The OPTCQ is used for connecting the SVX Drive to Ethernet/Industrial Protocol networks. It includes an RJ-45 pluggable connector. The interface uses CIP objects to communicate drive parameters (CIP is "Common Industrial Protocol", the same protocol used by DeviceNet). The board supports 10 Mbps and 100 Mbps communication speeds. The IP address of the board is configurable by Static, BOOTP and DHCP methods.

Control Panel Options

Factory Options

Description	Factory Installed Option Code	Field Installed NEMA Type 1/IP21 Catalog Number
Local/Remote Keypad SVX Control Panel—This option is standard on all drives and consists of an RS-232 connection, backlit alphanumeric LCD display with nine indicators for the RUN status and two indicators for the control source. The nine pushbuttons on the panel are used for panel programming and monitoring of all SVX parameters. The panel is detachable and isolated from the input line potential. Include LOC/REM key to choose control location.	**A**	**KEYPAD-LOC/REM**
Keypad Remote Mounting Kit—This option is used to remote mount the SVX keypad. The footprint is compatible to the SV9000 remote mount kit. Includes 10 ft cable, keypad holder and mounting hardware.	—	**OPTRMT-KIT-9000X**
Keypad Blank—9000X Series select keypad for use with special and custom applications.	—	**KEYPAD-BLANK**

Miscellaneous Options

Description	Catalog Number
9000XDrive—A PC-based tool for controlling and monitoring of the SVX. Features include: loading parameters that can be saved to a file or printed, setting references, starting and stopping the motor, monitoring signals in graphical or text form, and real-time display. To avoid damage to the drive or computer, SVDrivecable must be used.	**9000XDRIVE**
SVDrivecable—6 ft (1.8 m) RS-232 cable (22 gauge) with a 7-pin connector on each end. Should be used in conjunction with the 9000XDrive option to avoid damage to the SVX or computer. The same cable can be used for downloading specialized applications to the drive.	**SVDRIVECABLE**
External Dynamic Braking Resistors—Used with the dynamic braking chopper circuit to absorb motor regenerative energy for stopping the load and to dissipate the energy flowing back into the drive. Resistors are separated into standard duty and heavy-duty. Standard duty is defined as 20% duty or less with 100% braking torque, while heavy-duty is defined as 50% duty or less with 150% braking torque.	See **Page V6-T2-216**

SPX Drive Options

Brake Chopper Options

The brake chopper circuit option is used for applications that require dynamic braking. Dynamic braking resistors are not included with drive purchase. Consult the factory for additional dynamic braking resistor selections that are supplied separately. A list of common resistors are listed below and are complete indoor assemblies, include a pre-wired terminal block and a thermal switch, and are not UL Listed.

Duty Cycle

The duty cycle rating is based on a 60-second period. For example, the 20% duty cycle resistor can carry 100% current for 12 seconds out of every 60 seconds, while the 50% duty cycle resistor can carry 150% current for 30 seconds out of every 60 seconds.

Torque

If the braking torque required is less than 15%, dynamic braking is not required because the regenerated energy will be dissipated in the drive and motor losses.

Dynamic Brake Resistor—Catalog Number Selection

DBR – R100 – W0800

Dynamic Brake Resistor	Resistance	Rated Watts
	1D0 = 1.0 Ohms **100** = 100 Ohms	**0800** = 800 Watts **8000** = 8000 Watts **080K** = 80,000 Watts

230 V Brake Resistors

Drive hp (CT/I_H)	Minimum Ohms	20% Duty Cycle, 100% Torque		50% Duty Cycle, 150% Torque	
		Catalog Number	Dimensions (Inches)	Catalog Number	Dimensions (Inches)
0.75	30.0	**DBR-R100-W0400**	12W x 5D x 5H	**DBR-R100-W0800**	12W x 7D x 5H
1	30.0	**DBR-R100-W0400**	12W x 5D x 5H	**DBR-R100-W0800**	12W x 7D x 5H
1.5	30.0	**DBR-R100-W0400**	12W x 5D x 5H	**DBR-R036-W1200**	12W x 10D x 5H
2	30.0	**DBR-R100-W0400**	12W x 5D x 5H	**DBR-R036-W1200**	12W x 10D x 5H
3	30.0	**DBR-R036-W0800**	12W x 7D x 5H	**DBR-R036-W2000**	12W x 16D x 5H
4	30.0	**DBR-R036-W0800**	12W x 7D x 5H	**DBR-R030-W2400**	19W x 10D x 5H
5	30.0	**DBR-R036-W0800**	12W x 7D x 5H	**DBR-R030-W2800**	19W x 13D x 5H
7.5	20.0	**DBR-R020-W1200**	12W x 10D x 5H	**DBR-R020-W4800**	26.5W x 13D x 5H
10	10.0	**DBR-R015-W1600**	12W x 13D x 5H	**DBR-R112-W6000**	26.5W x 13D x 5H
15	10.0	**DBR-R012-W2400**	19W x 10D x 5H	**DBR-R010-W9000**	28W x 10D x 10H
20	3.3	**DBR-R9D3-W3200**	19W x 10D x 5H	**DBR-R3D4-W012K**	28W x 10D x 10H
25	3.3	**DBR-R5D5-W4000**	26.5W x 10D x 5H	**DBR-R5D1-W015K**	28W x 16D x 10H
30	3.3	**DBR-R4D8-W4800**	26.5W x 10D x 5H	**DBR-R4D1-W020K**	28W x 16D x 10H
40	1.4	**DBR-R004-W6000**	26.5W x 13D x 5H	**DBR-R3D4-W025K**	30W x 18D x 16H
50	1.4	**DBR-R3D1-W7500**	26.5W x 16D x 5H	**DBR-R2D1-W030K**	30W x 18D x 24H
60	1.4	**DBR-R2D8-W9000**	26.5W x 16D x 5H	**DBR-R002-W036K**	30W x 18D x 24H
75	1.4	**DBR-R2D6-W012K**	28W x 10D x 10H	**DBR-R1D5-W045K**	30W x 18D x 32H
100	1.4	**DBR-R002-W015K**	28W x 16D x 10H	**DBR-R1D4-W060K**	30W x 18D x 40H

480 V Brake Resistors

Drive hp (CT/I_H)	Minimum Ohms	20% Duty Cycle, 100% Torque Catalog Number	Dimensions (Inches)	50% Duty Cycle, 150% Torque Catalog Number	Dimensions (Inches)
1	63.0	**DBR-R100-W0400**	12W x 5D x 5H	**DBR-R100-W0800**	12W x 7D x 5H
1.5	63.0	**DBR-R100-W0400**	12W x 5D x 5H	**DBR-R100-W1200**	12W x 10D x 5H
2	63.0	**DBR-R100-W0400**	12W x 5D x 5H	**DBR-R100-W1200**	12W x 10D x 5H
3	63.0	**DBR-R100-W0800**	12W x 7D x 5H	**DBR-R100-W2000**	12W x 16D x 5H
5	63.0	**DBR-R100-W0800**	12W x 7D x 5H	**DBR-R100-W2800**	19W x 13D x 5H
6	63.0	**DBR-R100-W1200**	12W x 10D x 5H	**DBR-R070-W4000**	19W x 16D x 5H
7.5	63.0	**DBR-R100-W1200**	12W x 10D x 5H	**DBR-R063-W4800**	26.5W x 13D x 5H
10	63.0	**DBR-R063-W1600**	12W x 13D x 5H	**DBR-R063-W6000**	26.5W x 16D x 5H
15	42.0	**DBR-R042-W2400**	19W x 10D x 5H	**DBR-R042-W9000**	28W x 10D x 10H
20	21.0	**DBR-R030-W3200**	19W x 13D x 5H	**DBR-R023-W012K**	28W x 13D x 10H
25	21.0	**DBR-R030-W4000**	19W x 16D x 5H	**DBR-R021-W015K**	28W x 13D x 10H
30	14.0	**DBR-R020-W4800**	26.5W x 13D x 5H	**DBR-R014-W020K**	30W x 18D x 24H
40	6.5	**DBR-R112-W6000**	26.5W x 13D x 5H	**DBR-R007-W025K**	30W x 18D x 16H
50	6.5	**DBR-R013-W7500**	26.5W x 16D x 5H	**DBR-R8D5-W030K**	30W x 18D x 24H
60	6.5	**DBR-R010-W9000**	28W x 10D x 10H	**DBR-R7D3-W036K**	30W x 18D x 24H
75	3.3	**DBR-R009-W012K**	28W x 13D x 10H	**DBR-R3D3-W045K**	30W x 18D x 32H
100	3.3	**DBR-R5D1-W015K**	28W x 16D x 10H	**DBR-R004-W060K**	30W x 18D x 40H
125	3.3	**DBR-R4D1-W020K**	28W x 16D x 10H	**DBR-R004-W070K**	30W x 18D x 48H
150	3.3	**DBR-R3D4-W025K**	30W x 18D x 16H	**DBR-R3D5-W085K**	30W x 18D x 56H
200	3.3	**DBR-R3D3-W030K**	30W x 18D x 24H	**DBR-R3D3-W110K**	30W x 18D x 72H
250	1.4	**DBR-R2D5-W036K**	30W x 18D x 24H	①	—
300	1.4	**DBR-R1D5-W045K**	30W x 18D x 32H	①	—
350	1.4	**DBR-R1D4-W060K**	30W x 18D x 40H	①	—
400	0.9	**DBR-R1D4-W060K**	30W x 18D x 40H	①	—
500	0.9	**DBR-R0D9-W080K**	30W x 18D x 48H	①	—
550	0.9	**DBR-R001-W085K**	30W x 18D x 56H	①	—

Note

① Consult factory.

575 V Brake Resistors

Drive hp (CT/I_H)	Minimum Ohms	20% Duty Cycle, 100% Torque Catalog Number	Dimensions (Inches)	50% Duty Cycle, 150% Torque Catalog Number	Dimensions (Inches)
2	100.0	**DBR-R100-W0400**	12W x 5D x 5H	**DBR-R100-W1200**	12W x 10D x 5H
3	100.0	**DBR-R100-W0800**	12W x 7D x 5H	**DBR-R100-W2000**	12W x 16D x 5H
4	100.0	**DBR-R100-W0800**	12W x 7D x 5H	**DBR-R100-W2400**	19W x 10D x 5H
5	100.0	**DBR-R100-W0800**	12W x 7D x 5H	**DBR-R100-W2800**	19W x 13D x 5H
7.5	100.0	**DBR-R100-W1200**	12W x 10D x 5H	**DBR-R100-W4800**	26.5W x 13D x 5H
10	30.0	**DBR-R063-W1600**	12W x 13D x 5H	**DBR-R063-W6000**	26.5W x 16D x 5H
15	30.0	**DBR-R042-W2400**	19W x 10D x 5H	**DBR-R042-W9000**	28W x 10D x 10H
20	30.0	**DBR-R030-W3200**	19W x 13D x 5H	**DBR-R030-W012K**	28W x 13D x 10H
25	30.0	**DBR-R030-W4000**	19W x 16D x 5H	**DBR-R030-W015K**	28W x 16D x 10H
30	18.0	**DBR-R020-W4800**	26.5W x 13D x 5H	**DBR-R020-W020K**	30W x 18D x 16H
40	18.0	**DBR-R030-W6000**	26.5W x 16D x 5H	**DBR-R184-W025K**	30W x 18D x 16H
50	9.0	**DBR-R013-W7500**	26.5W x 16D x 5H	**DBR-R012-W030K**	30W x 18D x 24H
60	9.0	**DBR-R010-W9000**	28W x 10D x 10H	**DBR-R010-W036K**	30W x 18D x 24H
75	9.0	**DBR-R009-W012K**	28W x 13D x 10H	**DBR-R009-W045K**	30W x 18D x 24H
100	7.0	**DBR-R013-W015K**	28W x 16D x 10H	**DBR-R8D4-W060K**	30W x 18D x 40H
125	7.0	**DBR-R8D2-W020K**	30W x 18D x 10H	**DBR-R007-W070K**	30W x 18D x 40H
150	7.0	**DBR-R007-W025K**	30W x 18D x 16H	**DBR-R006-W085K**	30W x 18D x 56H
175	7.0	**DBR-R007-W030K**	30W x 18D x 24H	**DBR-R007-W100K**	30W x 18D x 72H
200	2.5	**DBR-R3D3-W030K**	30W x 18D x 24H	**DBR-R2D6-W110K**	30W x 18D x 64H
250	2.5	**DBR-R2D5-W036K**	30W x 18D x 24H	**DBR-R003-W140K**	30W x 18D x 72H
300	2.5	**DBR-R3D3-W045K**	30W x 18D x 32H	①	—
400	1.7	**DBR-R002-W060K**	30W x 18D x 48H	①	—
450	1.7	**DBR-R1D8-W070K**	30W x 18D x 48H	①	—
500	1.7	**DBR-R002-W080K**	30W x 18D x 56H	①	—

Note

① Consult factory.

Control/Communication Options

Available Control/Communications Options

Option	Description	Option Type
K2	**Door-Mounted Speed Potentiometer with HOA Selector Switch**—Provides the SPX with the ability to start/stop and adjust the speed reference from door-mounted control devices or remotely from customer supplied inputs. In HAND position, the drive will start and the speed is controlled by the door-mounted speed potentiometer. The drive will be disabled in the OFF position. When AUTO is selected, the drive run and speed control commands are via user-supplied dry contact and 4–20 mA signal.	Control
K4	**HAND/OFF/AUTO Switch for Non-Bypass Configurations**—Provides a three-position selector switch that allows the user to select either a HAND or AUTO mode of operation. HAND mode is defaulted to keypad operation, and AUTO mode is defaulted to control from an external terminal source. These modes of operation can be configured via programming to allow for alternate combinations of start and speed sources. Start and speed sources include keypad, I/O and fieldbus.	Control
KB	**115 V Control Transformer, 550 VA**—Provides a fused control power transformer with additional 550 VA at 115 V for customer use.	Control
L1	**Power On and Fault Pilot Lights**—Provide a white power on light that indicates power to the enclosed cabinet and a red fault light that indicates a drive fault has occurred.	Light
P2	**Disconnect Switch**—Disconnect switch option is applicable only with NEMA Type 1/IP21 and NEMA Type 12/IP54 Freestanding drives. Allows a convenient means of disconnecting the SPX from the line, and the operating mechanism can be padlocked in the OFF position. This is factory-mounted in the enclosure.	Input

SPX Freestanding Options

480 V and 690 V Control Options, 200–550 hp ①

Description	Catalog Number Suffix
Door-mounted speed potentiometer with HOA selector switch	**K2**
HAND/OFF/AUTO switch (22 mm)	**K4**
115 volt control transformer 550 VA	**KB**

480 V and 690 V Light Options, 200–550 hp ①

Description	Catalog Number Suffix
Power on/fault pilot lights	**L1**

Input Options, 200–550 hp ①

Description	Catalog Number Suffix
Disconnect switch	**P2** ②

Notes

① Consult factory for adder information.
② Applicable with FR10 and FR11 freestanding designs only.

Replacement Parts

FR4 Spare Parts

Category	Description	Quantity/ Drive	230 V Catalog Number	480 V Catalog Number	575 V Catalog Number
Control fan	NEMA Type 12 control fan ①	1	**PP01086**	**PP01086**	—
Control module ②	SPX control module	1	**CPBS0000000000**	**CPBS0000000000**	—
	Standard slot A I/O card	1	**OPTA9**	**OPTA9**	—
	Standard slot B I/O card	1	**OPTA2**	**OPTA2**	—
Keypad ②	SVX/SPX keypad	1	**KEYPAD-LOC/REM**	**KEYPAD-LOC/REM**	—
Main fan ②	DC fan (main)	1	**PP01060**	**PP01060**	—
Other	Mounting kit, fixing kit	1	**FR00040**	**FR00040**	—
	Mounting kit, fixing kit, N12 ①	1	**FR00079**	**FR00079**	—
	Control cover, plastic, N1	1	**FR00006**	**FR00006**	—

FR5 Spare Parts

Category	Description	Quantity/ Drive	230 V Catalog Number	480 V Catalog Number	575 V Catalog Number
Control fan	NEMA Type 12 control fan ①	1	**PP01088**	**PP01088**	—
Control module ②	SPX control module	1	**CPBS0000000000**	**CPBS0000000000**	—
	Standard slot A I/O card	1	**OPTA9**	**OPTA9**	—
	Standard slot B I/O card	1	**OPTA2**	**OPTA2**	—
Keypad ②	SVX/SPX keypad	1	**KEYPAD-LOC/REM**	**KEYPAD-LOC/REM**	—
Main fan ②	DC fan (main)	1	**PP01061**	**PP01061**	—
Other	Mounting kit, fixing kit	1	**FR00050**	**FR00050**	—
	Mounting kit, fixing kit, N12 ①	1	**FR00081**	**FR00081**	—
	Control cover, plastic, N1	1	**FR05011**	**FR05011**	—

FR6 Spare Parts

Category	Description	Quantity/ Drive	230 V Catalog Number	480 V Catalog Number	575 V Catalog Number
Control fan	NEMA Type 12 control fan ①	1	**PP01049**	**PP01049**	—
Control module ②	SPX control module	1	**CPBS0000000000**	**CPBS0000000000**	**CPBS0000000000**
	Standard slot A I/O card	1	**OPTA9**	**OPTA9**	**OPTA9**
	Standard slot B I/O card	1	**OPTA2**	**OPTA2**	**OPTA2**
Keypad ②	SVX/SPX keypad	1	**KEYPAD-LOC/REM**	**KEYPAD-LOC/REM**	**KEYPAD-LOC/REM**
Main fan ②	DC fan (main)	1	**PP01062**	**PP01062**	—
Other	Mounting kit, fixing kit	1	**FR00060**	**FR00060**	**FR00060**
	Mounting kit, fixing kit, N12 ①	1	**FR00082**	**FR00082**	**FR00082**
	Control cover, plastic, N1	1	**FR06011**	**FR06011**	**FR06011**

FR7 Spare Parts

Category	Description	Quantity/ Drive	230 V Catalog Number	480 V Catalog Number	575 V Catalog Number
Control fan	NEMA Type 12 control fan ①	1	**PP01049**	**PP01049**	**PP01049**
Control module ②	SPX control module	1	**CPBS0000000000**	**CPBS0000000000**	**CPBS0000000000**
	Standard slot A I/O card	1	**OPTA9**	**OPTA9**	**OPTA9**
	Standard slot B I/O card	1	**OPTA2**	**OPTA2**	**OPTA2**
Keypad ②	SVX/SPX keypad	1	**KEYPAD-LOC/REM**	**KEYPAD-LOC/REM**	**KEYPAD-LOC/REM**
Main fan ②	DC fan (main)	1	**PP01063**	**PP01063**	**PP01063**
Other	Mounting kit, fixing kit	1	**FR07071**	**FR07071**	**FR07071**
	Mounting kit, fixing kit, N12 ①	1	**FR07072**	**FR07072**	**FR07072**
	Control cover, plastic, N1	1	**FR07011**	**FR07011**	**FR07011**

Notes

① Only for NEMA Type 12/IP54 Type drives.
② Factory recommended spare parts.

FR8 Spare Parts

Category	Description	Quantity/ Drive	230 V Catalog Number	480 V Catalog Number	575 V Catalog Number
Control fan	NEMA Type 12 control fan ①	1	**CP01180**	**CP01180**	**CP01180**
Control module ②	SPX control module	1	**CPBS0000000000**	**CPBS0000000000**	**CPBS0000000000**
	Standard slot A I/O card	1	**OPTA9**	**OPTA9**	**OPTA9**
	Standard slot B I/O card	1	**OPTA2**	**OPTA2**	**OPTA2**
Keypad ②	SVX/SPX keypad	1	**KEYPAD-LOC/REM**	**KEYPAD-LOC/REM**	**KEYPAD-LOC/REM**
Main AC fan	Fan AC	1	**PP01123**	**PP01123**	**PP01123**
	Fan fuse	2	**PP20202**	**PP20202**	**PP20202**
	Starting cap	1	**S00734**	**S00734**	**S00734**
	Fan driver board AC	1	**VB00599**	**VB00799**	**VB00799**
	Isolation transformer (fan)	1	**S0000113**	**S0000113**	**S0000113**
Main DC fan ②	DC fan	1	**PP00071**	**PP00071**	**PP00071**
	DC power supply	1	**S01016**	**S01016**	**S01016**
Other	Front cover, N12 ①	1	**FR08079**	**FR08079**	**FR08079**
	Conduit plate, N12	1	**FR08082**	**FR08082**	**FR08082**
	Front cover, N1	1	**FR08106**	**FR08106**	**FR08106**

FR9 Spare Parts

Category	Description	Quantity/ Drive	230 V Catalog Number	480 V Catalog Number	575 V Catalog Number
Control fan	50 mm fan	1	**PP09041**	**PP09041**	**PP09041**
	80 mm fan	1	**PP01068**	**PP01068**	**PP01068**
Control module ①	SPX control module	1	**CPBS0000000000**	**CPBS0000000000**	**CPBS0000000000**
	Standard slot A I/O card	1	**OPTA9**	**OPTA9**	**OPTA9**
	Standard slot B I/O card	1	**OPTA2**	**OPTA2**	**OPTA2**
Converter	Power module ②	1	**FR09-0261-2-ANV**	**FR09-0261-4-ANV**	**FR09-0125-5-ANV**
		1	**FR09-0300-2-ANV**	**FR09-0300-4-ANV**	**FR09-0144-5-ANV**
		1	—	—	**FR09-0170-5-ANV**
	Driver board	1	**S00583**	**S00583**	**S00583**
	Shunt board ②	6	—	**VB00535**	**VB00537**
		6	—	**VB00536**	**VB00542**
		6	—	—	**VB00543**
DC section	Balancing resistor	3	**PP00052**	**PP00052**	**PP00052**
	Bus capacitor	8	**S00335**	**S00335**	**PP01041**
	DC busbars DC–	1	**FR09043**	**FR09043**	**FR09043**
	DC busbars DC+	1	**FR09044**	**FR09044**	**FR09044**
	DC busbars connection	1	**FR09045**	**FR09045**	**FR09045**
	DC busbars +/– insulator	1	**FR09046**	**FR09046**	**FR09046**
	DC busbars –/con insulator	1	**FR09047**	**FR09047**	**FR09047**
Inverter	Rectifier module	1	**FR09826**	**FR09822**	**FR09823**
	Diode	3	**CP01268**	**CP01268**	**CP01268**
	Rectifier board	1	—	**VB00459**	**VB00460**
Keypad ①	SVX/SPX keypad	1	**KEYPAD-LOC/REM**	**KEYPAD-LOC/REM**	**KEYPAD-LOC/REM**
Main DC fan ①	DC fan	1	**PP00072**	**PP00072**	**PP00072**
	DC power supply	1	**S01017**	**S01017**	**S01017**
Other	Front cover power	1	**FR09012**	**FR09012**	**FR09012**
	Front cover connection	1	**FR09013**	**FR09013**	**FR09013**
	Front power conduit	1	**FR09014**	**FR09014**	**FR09014**

Notes

① Only for NEMA Type 12/IP54 Type drives.
② Factory recommended spare parts.
③ Select one part number based on the amperage rating of the drive. Please contact EatonCare at 877-ETN-CARE for assistance.

FR10 Spare Parts

Category	Description	Quantity/ Drive	230 V Catalog Number	480 V Catalog Number	575 V Catalog Number
Control	Fiber board	1	—	**S00451**	**S00451**
	ASIC board	1	—	**S00457**	**S00457**
Control fan	ASIC fan	1	—	**PP01096**	**PP01096**
Control module ①	SPX control module	1	—	**CPBS0000000000**	**CPBS0000000000**
	Standard slot A I/O card	1	—	**OPTA9**	**OPTA9**
	Standard slot B I/O card	1	—	**OPTA2**	**OPTA2**
Converter	Power module ②	1	—	**FR10-0385-4-ANV**	**FR10-0261-5-ANV**
		1	—	**FR10-0460-4-ANV**	**FR10-0325-5-ANV**
		1	—	**FR10-0520-4-ANV**	**FR10-0385-5-ANV**
		1	—	—	**FR10-0416-5-ANV**
	Driver board	1	—	**S00450**	**S00450**
	Driver adapter board	1	—	**VB00330**	**VB00330**
	Shunt board ②	6	—	**VB00497**	**VB00510**
		6	—	**VB00498**	**VB00511**
		6	—	**VB00537**	**VB00545**
Covers	Top cover	1	—	**FR10340**	**FR10340**
	Side cover	2	—	**FR10341**	**FR10341**
DC section	Balancing resistor	2	—	**PP13027**	**PP13028**
	DC busbars kit (right)	1	—	**S0000005**	**S0000005**
	Bus capacitor	12	—	**S00335**	**S00336**
Inverter	Rectifier module	1	—	**FR10823**	**FR10823**
	Charging resistor	1	—	**PP00066**	**PP00066**
	Diode	3	—	**PP01177**	**PP01177**
	Rectifier board	1	—	**S00591**	**S00592**
Keypad ①	SVX/SPX keypad	1	—	**KEYPAD-LOC/REM**	**KEYPAD-LOC/REM**
Main DC fan ①	DC fan	2	—	**PP00072**	**PP00072**
	DC power supply	2	—	**S01017**	**S01017**

Notes

① Factory recommended spare parts.

② Select one part number based on the amperage rating of the drive. Please contact EatonCare at 877-ETN-CARE for assistance.

FR11 Spare Parts

Category	Description	Quantity/ Drive	230 V Catalog Number	480 V Catalog Number	575 V Catalog Number
Control	Fiber board	1	—	**S00451**	**S00451**
	ASIC board	1	—	**S00457**	**S00457**
Control fan	ASIC fan	1	—	**PP01096**	**PP01096**
Control module ①	SPX control module	1	—	**CPBS0000000000**	**CPBS0000000000**
	Standard slot A I/O card	1	—	**OPTA9**	**OPTA9**
	Standard slot B I/O card	1	—	**OPTA2**	**OPTA2**
Converter	Power module ②	1	—	**FR11-0590-4-ANV**	**FR11-0460-5-ANV**
		1	—	**FR11-0650-4-ANV**	**FR11-0502-5-ANV**
		1	—	**FR11-0730-4-ANV**	**FR11-0590-5-ANV**
	Driver board	1	—	**S00452**	**S00452**
	Driver adapter board	1	—	**VB00330**	**VB00330**
	Shunt board ②	9	—	**VB00513**	**VB00512**
		9	—	**VB00514**	**VB00546**
		9	—	**VB00538**	**VB00547**
Covers	Top cover	1	—	**FR11345**	**FR11345**
DC section	Balancing resistor	3	—	**PP13027**	**PP13027**
	DC busbars kit (right)	3	—	**S0000005**	**S0000005**
	Bus capacitor	18	—	**S00335**	**S00335**
Inverter	Rectifier module	1	—	**FR10823**	**FR10823**
	Diode	3	—	**PP01177**	**PP01177**
	Rectifier board	1	—	**S00591**	**S00591**
Keypad ①	SVX/SPX keypad	1	—	**KEYPAD-LOC/REM**	**KEYPAD-LOC/REM**
Main DC fan ①	DC fan	2	—	**PP00072**	**PP00072**
	DC power supply	2	—	**S01017**	**S01017**

Notes

① Factory recommended spare parts.

② Select one part number based on the amperage rating of the drive. Please contact EatonCare at 877-ETN-CARE for assistance.

FR12 Spare Parts

Category	Description	Quantity/ Drive	230 V Catalog Number	480 V Catalog Number	575 V Catalog Number
Control	Fiber board	2	—	**S00451**	**S00451**
	ASIC board	2	—	**S00457**	**S00457**
	Star coupler	1	—	**S00593**	**S00593**
Control fan	ASIC fan	2	—	**PP01096**	**PP01096**
Control module ①	SPX control module	1	—	**CPBS0000000000**	**CPBS0000000000**
	Standard slot A I/O card	1	—	**OPTA9**	**OPTA9**
	Standard slot B I/O card	1	—	**OPTA2**	**OPTA2**
Converter	Power module ②	1	—	**FR12-0820-4-ANV**	**FR12-0650-5-ANV**
		1	—	**FR12-0920-4-ANV**	**FR12-0750-5-ANV**
		1	—	**FR12-1030-4-ANV**	**FR12-0820-5-ANV**
	Driver board	2	—	**S00450**	**S00450**
	Driver adapter board	2	—	**VB00330**	**VB00330**
	Shunt board	12	—	**VB00498**	**VB00511**
Covers	Top cover	2	—	**FR10340**	**FR10340**
	Side cover	4	—	**FR10341**	**FR10341**
DC section	Balancing resistor	4	—	**PP13027**	**PP13027**
	DC busbars kit (right)	2	—	**S0000005**	**S0000005**
	Bus capacitor	24	—	**S00335**	**S00336**
Inverter	Rectifier module	2	—	**FR10823**	**FR10823**
	Diode	3	—	**PP01177**	**PP01177**
	Rectifier board	2	—	**S00591**	**S00591**
Keypad ①	SVX/SPX keypad	1	—	**KEYPAD-LOC/REM**	**KEYPAD-LOC/REM**
Main DC fan ①	DC fan	4	—	**PP00072**	**PP00072**
	DC power supply	4	—	**S01017**	**S01017**

Notes

① Factory recommended spare parts.

② Select one part number based on the amperage rating of the drive. Please contact EatonCare at 877-ETN-CARE for assistance.

FR13 Spare Parts

Category	Description	Quantity/ Drive	230 V Catalog Number	480 V Catalog Number	575 V Catalog Number
Control	ASIC board	1	—	**S00457**	**S00457**
	ASIC assembly	1	—	**60S01030**	**60S01030**
Control fan	ASIC fan	1	—	**PP01096**	**PP01096**
Control module ①	SPX control module	1	—	**CPBS0000000000**	**CPBS0000000000**
	Standard slot A I/O card	1	—	**OPTA9**	**OPTA9**
	Standard slot B I/O card	1	—	**OPTA2**	**OPTA2**
Converter	Power module ②	3	—	**FI13-1150-4-ANV**	**FR13-1030-5-ANV**
		3	—	**FI13-1300-4-ANV**	**FR13-1180-5-ANV**
		3	—	**FI13-1450-4-ANV**	**FR13-920-5-ANV**
	Driver board	3	—	**S00454**	**S00454**
	Driver adapter board	2	—	**VB00330**	**VB00330**
	Shunt board ②	18	—	**VB00505**	**VB00516**
		18	—	**VB00514**	**VB00517**
		18	—	**VB00541**	**VB00547**
Covers	Top cover	3	—	**FI10001**	**FI10001**
	Side cover	3	—	**FI10003**	**FI10003**
DC section	Balancing resistor	6	—	**PP13034**	**PP13034**
	Bus capacitor	36	—	**S00335**	**S00336**
	DC busbars kit	3	—	**FI13329**	**FI13329**
Inverter	Rectifier module	2	—	**FR10823**	**FR10823**
	Diode	3	—	**PP01177**	**PP01177**
	Rectifier board	2	—	**S00591**	**S00591**
Keypad ①	SVX/SPX keypad	1	—	**KEYPAD-LOC/REM**	**KEYPAD-LOC/REM**
Main DC fan ①	DC fan	4	—	**PP00072**	**PP00072**
	DC power supply	4	—	**S01017**	**S01017**

Notes

① Factory recommended spare parts.

② Select one part number based on the amperage rating of the drive. Please contact EatonCare at 877-ETN-CARE for assistance.

FR14 Spare Parts

Category	Description	Quantity/ Drive	230 V Catalog Number	480 V Catalog Number	575 V Catalog Number
Control	ASIC board	2	—	**S00457**	**S00457**
	Star coupler	1	—	**S00593**	**S00593**
	ASIC assembly	2	—	**60S01030**	**60S01030**
	Star coupler kit	1	—	**FR10860**	**FR10860**
Control fan	ASIC fan	2	—	**PP01096**	**PP01096**
Control module ①	SPX control module	1	—	**CPBS0000000000**	**CPBS0000000000**
	Standard slot A I/O card	1	—	**OPTA9**	**OPTA9**
	Standard slot B I/O card	1	—	**OPTA2**	**OPTA2**
Converter	Power module ②	1	—	**FR14-1770-4-ANV**	**FR14-1500-5-ANV**
		1	—	**FR14-2150-4-ANV**	**FR14-1900-5-ANV**
		1	—	**FR14-2700-4-ANV**	**FR14-2250-5-ANV**
	Driver board	6	—	**S00454**	**S00454**
	Driver adapter board	2	—	**VB00330**	**VB00330**
	Shunt board ②	36	—	**VB00541**	**VB00516**
		36	—	—	**VB00517**
Covers	Top cover	6	—	**FI10001**	**FI10001**
	Side cover	6	—	**FI10003**	**FI10003**
DC section	Balancing resistor	6	—	**PP13034**	**PP13034**
	Bus capacitor	72	—	**S00335**	**S00336**
	DC busbars kit	6	—	**FI13329**	**FI13329**
Inverter	Rectifier module	2	—	**FR10823**	**FR10823**
	Diode	3	—	**PP01177**	**PP01177**
	Rectifier board	2	—	**S00591**	**S00591**
Keypad ①	SVX/SPX keypad	1	—	**KEYPAD-LOC/REM**	**KEYPAD-LOC/REM**
Main DC fan ①	DC fan	6	—	**PP00072**	**PP00072**
	DC power supply	6	—	**S01017**	**S01017**

Notes

① Factory recommended spare parts.

② Select one part number based on the amperage rating of the drive. Please contact EatonCare at 877-ETN-CARE for assistance.

Technical Data and Specifications

SPX Drives

Description	Specification
Input Ratings	
Input voltage (V_{in})	+10%/–15%
Input frequency (f_{in})	50/60 Hz (variation up to 45–66 Hz)
Connection to power	Once per minute or less (typical operation)
High withstand rating	100 kAIC
Output Ratings	
Output voltage	0 to V_{in}
Continuous output current	I_H rated 100% at 122 °F (50 °C), FR9 and below I_L rated 100% at 104 °F (40 °C), FR9 and below I_H/I_L 100% at 104 °F (40 °C), FR10 and above
Overload current (I_H/I_L)	150% I_H, 110% I_L for 1 min.
Output frequency	0 to 320 Hz
Frequency resolution	0.01 Hz
Initial output current (I_H)	250% for 2 seconds
Efficiency	>96%
Control Characteristics	
Control method	Frequency control (V/f) Open loop: sensorless vector control Closed loop: frequency control Closed loop: vector control
Switching frequency	Adjustable with parameter 2.6.9
Frame 4–6	1 to 16 kHz; default 10 kHz
Frame 7–12	1 to 10 kHz; default 3.6 kHz
Frequency reference	Analog input: Resolution 0.1% (10-bit), accuracy ±1% V/Hz Panel reference: Resolution 0.01 Hz
Field weakening point	30 to 320 Hz
Acceleration time	0 to 3000 sec.
Deceleration time	0 to 3000 sec.
Braking torque	DC brake: 30% x T_n (without brake option)
Ambient Conditions	
Ambient operating temperature	14 °F (–10 °C), no frost to 122 °F (50 °C) I_H (FR4–FR9) 14 °F (–10 °C), no frost to 104 °F (40 °C) I_L (FR10 and up) 14 °F (–10 °C), no frost to 104 °F (40 °C) I_L (all frames)
Storage temperature	–40° to 158 °F (–40° to 70 °C)
Relative humidity	0 to 95% RH, noncondensing, non-corrosive, no dripping water
Air quality	Chemical vapors: IEC 721-3-3, unit in operation, class 3C2; Mechanical particles: IEC 721-3-3, unit in operation, class 3S2
Altitude	100% load capacity (no derating) up to 3280 ft (1000 m); 1% derating for each 328 ft (100 m) above 3280 ft (1000 m); max. 9842 ft (3000 m)
Vibration	EN 50178, EN 60068-2-6; 5 to 50 Hz, displacement amplitude 1 mm (peak) at 3 to 15.8 Hz, max. acceleration amplitude 1G at 15.8 to 150 Hz
Shock	EN 50178, EN 60068-2-27 UPS Drop test (for applicable UPS weights) Storage and shipping: max. 15 g, 11 ms (in package)
Enclosure class	NEMA 1/IP21 or NEMA 12/IP54, open chassis/IP20

Description	Specification
Control Connections	
Analog input voltage	0 to 10 V, R = 200 kohms (–10 to 10 V joystick control) resolution 0.1%; accuracy ±1%
Analog input current	0(4) to 20 mA; R_i—250 ohms differential
Digital inputs (6)	Positive or negative logic; 18 to 30 Vdc
Auxiliary voltage	+24 V ±15%, max. 250 mA
Output reference voltage	+10 V +3%, max. load 10 mA
Analog output	0(4) to 20 mA; R_L max. 500 ohms; resolution 10 bit; Accuracy ±2%
Digital outputs	Open collector output, 50 mA/48V
Relay outputs	2 programmable Form C relay outputs switching capacity: 24 Vdc/8 A, 250 Vac/8 A, 125 Vdc/0.4 A
Protections	
Overcurrent protection	Trip limit 4.0 x I_H instantaneously
Overvoltage protection	Yes
Undervoltage protection	Yes
Earth fault protection	In case of earth fault in motor or motor cable, only the frequency converter is protected
Input phase supervision	Trips if any of the input phases are missing
Motor phase supervision	Trips if any of the output phases are missing
Overtemperature protection	Yes
Motor overload protection	Yes
Motor stall protection	Yes
Motor underload protection	Yes
Short-circuit protection	Yes (+24 V and +10 V reference voltages)
High Performance Features	
Speed error	<0.01%, depending on the encoder
Encoder support	Incremental or absolute
Encoder voltages	5 V (RS-422), 15 V or 24 V, depending on the option card
Torque control	Full torque control at all speeds, including zero
Torque accuracy	<2%; <5% down to zero speed
Starting torque	>200%, depending on motor and drive sizing
Master/slave configurations	Full capability
System analysis	Integrated data logger
PC communication	Fast multiple drive monitoring with PC
Inter-drive communication	High-speed bus (12 Mbits/s)
High-speed applications	Up to 7200 Hz (special software required)

Dimensions

Approximate Dimensions in Inches (mm)

9000X Drives

NEMA Type 1/IP21 and NEMA Type 12/IP54, FR4, FR5 and FR6

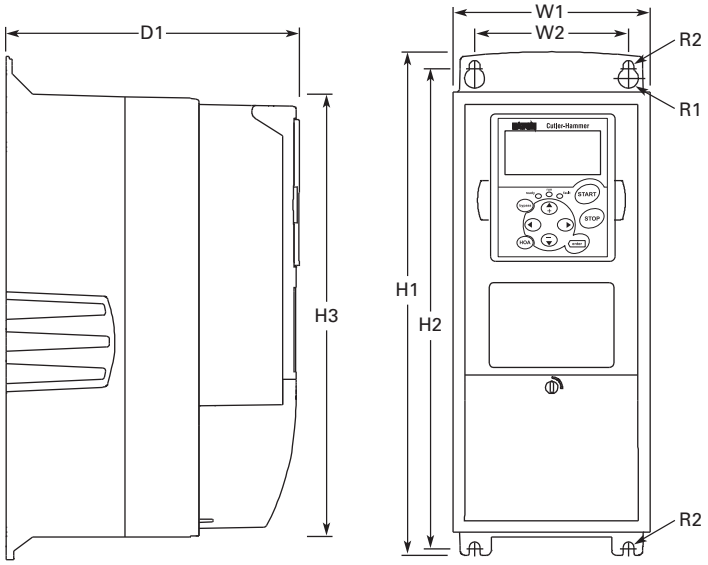

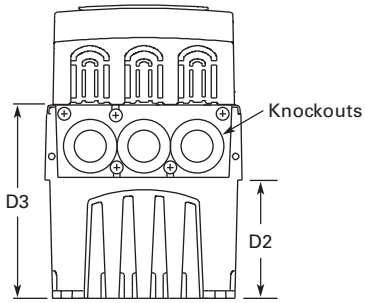

Voltage	hp (I_H)	H1	H2	H3	D1	D2	D3	W1	W2	R1 Dia.	R2 Dia.	Weight Lbs (kg)	Knockouts at Inches (mm) N1 (O.D.)
FR4													
230 V	3/4–3	12.9 (327)	12.3 (313)	11.5 (292)	7.5 (190)	3.0 (77)	5.0 (126)	5.04 (128)	3.9 (100)	0.5 (13)	0.3 (7)	11.0 (5)	3 at 10.1 (28)
480 V	1–5												
FR5													
230 V	5–7-1/2	16.5 (419)	16.0 (406)	15.3 (389)	8.4 (214)	3.9 (100)	5.8 (148)	5.7 (144)	3.9 (100)	0.5 (13)	0.3 (7)	17.9 (8)	2 at 1.5 (37) 1 at 10.1 (28)
480 V	7-1/2–15												
FR6													
230 V	10–15	22.0 (558)	21.3 (541)	20.4 (519)	9.3 (237)	4.2 (105)	6.5 (165)	7.7 (195)	5.8 (148)	0.6 (15.5)	0.4 (9)	40.8 (19)	3 at 1.5 (37)
480 V	20–30												
575 V	2–25												

Approximate Dimensions in Inches (mm)

NEMA Type 1/IP21 and NEMA Type 12/IP54 with Flange Kit, FR4, FR5 and FR6

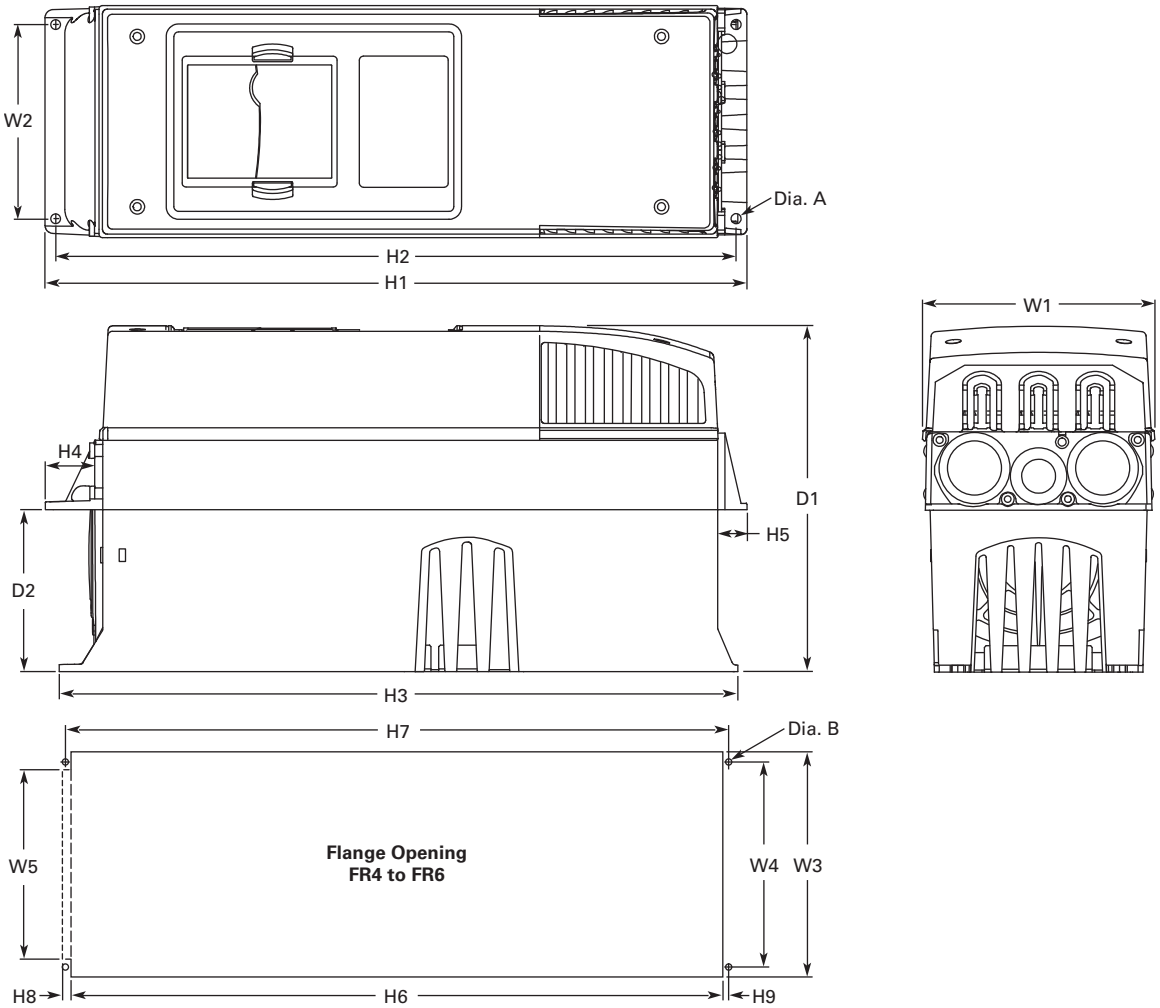

FR4, FR5 and FR6 with Flange Kit

W1	W2	H1	H2	H3	H4	H5	D1	D2	Dia. A
FR4									
5.0 (128)	4.5 (113)	13.3 (337)	12.8 (325)	12.9 (327)	1.2 (30)	0.9 (22)	7.5 (190)	3.0 (77)	0.3 (7)
FR5									
5.6 (143)	4.7 (120)	17.0 (434)	16.5 (420)	16.5 (419)	1.4 (36)	0.7 (18)	8.4 (214)	3.9 (100)	0.3 (7)
FR6									
7.7 (195)	6.7 (170)	22.0 (560)	21.6 (549)	22.0 (558)	1.2 (30)	0.8 (20)	9.3 (237)	4.2 (106)	0.3 (7)

Flange Opening, FR4 to FR6

W3	W4	W5	H6	H7	H8	H9	Dia. B
FR4							
4.8 (123)	4.5 (113)	—	12.4 (315)	12.8 (325)	—	0.2 (5)	0.3 (7)
FR5							
5.3 (135)	4.7 (120)	—	16.2 (410)	16.5 (420)	—	0.2 (5)	0.3 (7)
FR6							
7.3 (185)	6.7 (170)	6.2 (157)	21.2 (539)	21.6 (549)	0.3 (7)	0.2 (5)	0.3 (7)

Approximate Dimensions in Inches (mm)

NEMA Type 1/IP21 and NEMA Type 12/IP54, FR7

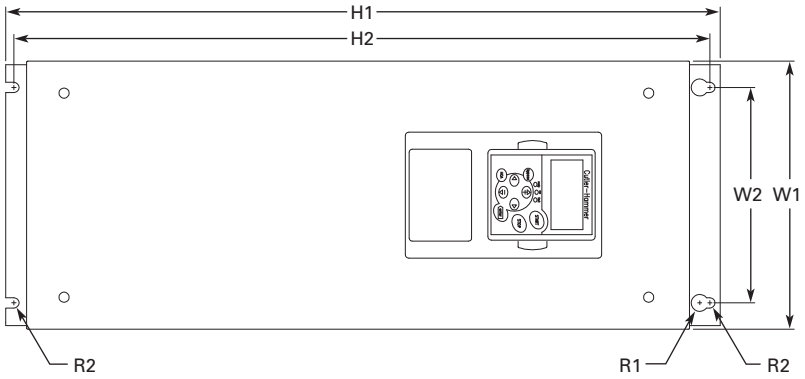

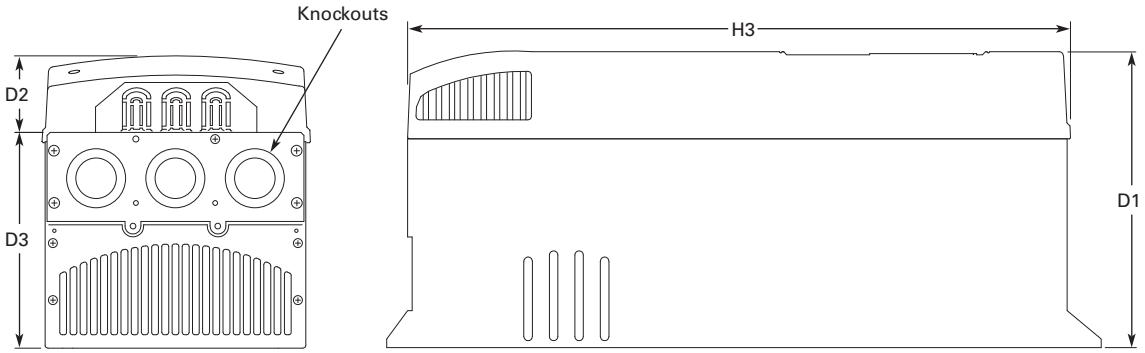

Voltage	hp (I_H)	H1	H2	H3	D1	D2	D3	W1	W2	R1 Dia.	R2 Dia.	Weight Lbs (kg)	Knockouts at Inches (mm) N1 (O.D.)
230 V	20–30	24.8 (630)	24.2 (614)	23.2 (590)	10.1 (257)	3.0 (77)	7.3 (184)	9.3 (237)	7.5 (190)	0.7 (18)	0.4 (9)	77.2 (35)	3 at 1.5 (37)
480 V	40–60												
575 V	30–40												

Approximate Dimensions in Inches (mm)

NEMA Type 1/IP21 and NEMA Type 12/IP54, FR8

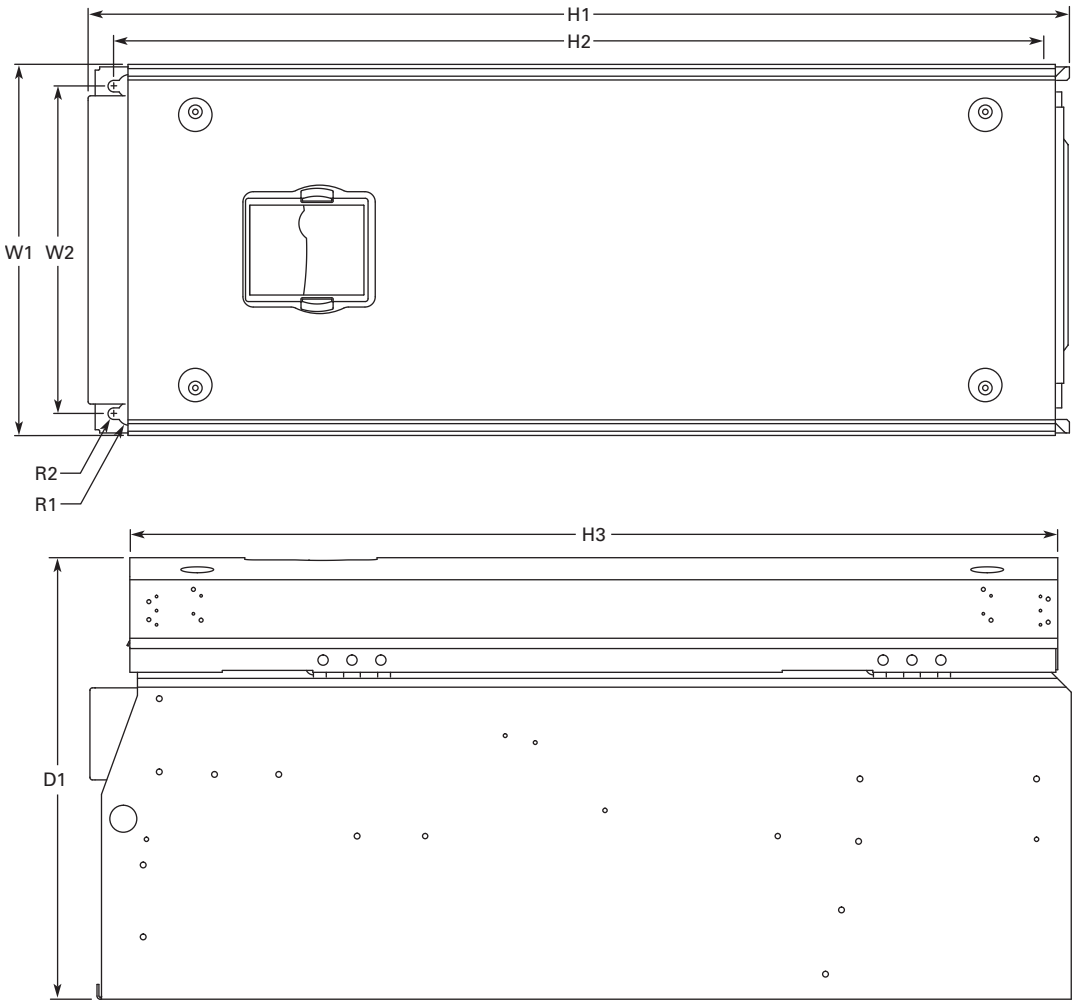

Voltage	hp (I_H)	D1	H1	H2	H3	W1	W2	R1 Dia.	R2 Dia.	Weight Lbs (kg)
230 V	40–60	13.5 (344)	30.1 (764)	28.8 (732)	28.4 (721)	11.5 (291)	10 (255)	0.7 (18)	0.4 (9)	127 (58)
480 V	75–125									
575 V	50–75									

Approximate Dimensions in Inches (mm)

NEMA Type 1/IP21 and NEMA Type 12/IP54, with Flange Kit, FR7 and FR8

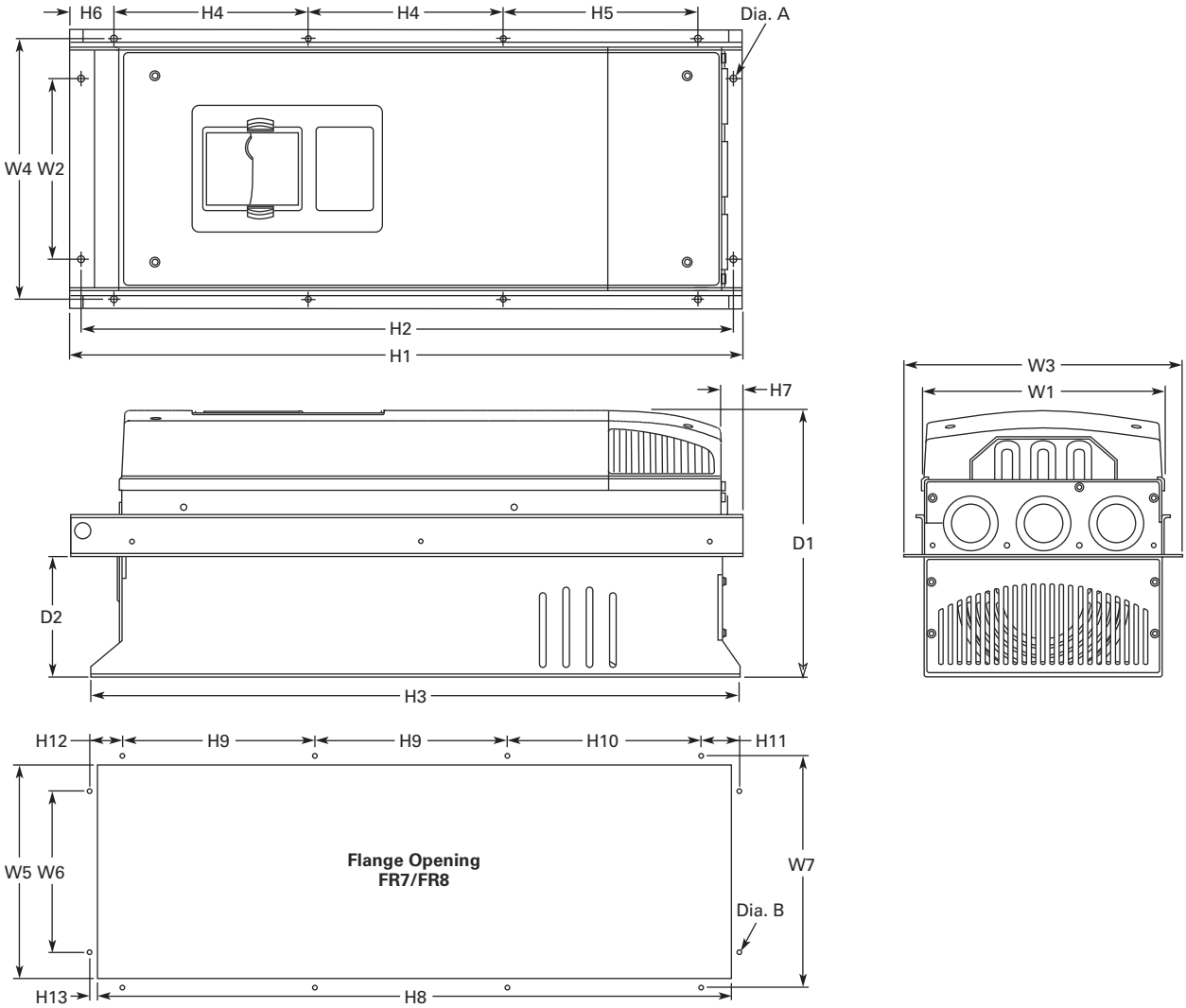

W1	W2	W3	W4	H1	H2	H3	H4	H5	H6	H7	D1	D2	Dia. A
FR7													
9.3 (237)	6.8 (175)	10.6 (270)	10.0 (253)	25.6 (652)	24.9 (632)	24.8 (630)	7.4 (189)	7.4 (189)	0.9 (23)	0.8 (20)	10.1 (257)	4.6 (117)	0.3 (6)
FR8													
11.2 (285)	—	14.0 (355)	13.0 (330)	32.8 (832)	—	29.3 (745)	10.2 (258)	10.4 (265)	1.7 (43)	2.2 (57)	13.5 (344)	4.3 (110)	0.4 (9)

Flange Opening, FR7 and FR8

W5	W6	W7	H8	H9	H10	H11	H12	H13	Dia. B
FR7									
9.2 (233)	6.9 (175)	10.0 (253)	24.4 (619)	7.4 (189)	7.4 (189)	1.4 (35)	1.3 (32)	1.0 (25)	0.3 (6)
FR8									
11.9 (301)	—	13.0 (330)	31.9 (810)	10.2 (258)	10.4 (265)	—	—	1.3 (33)	0.4 (9)

Approximate Dimensions in Inches (mm)

NEMA Type 1/IP21 and NEMA Type 12/IP54, FR9

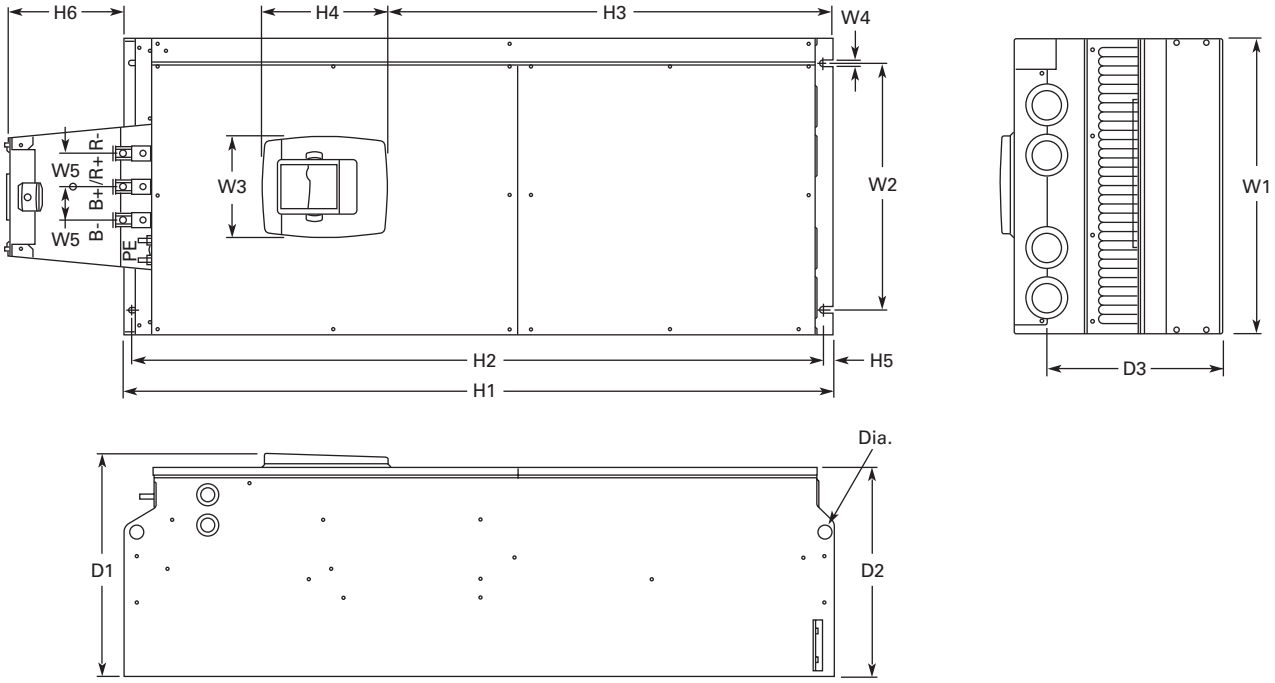

Voltage	hp (I_H)	W1	W2	W3	W4	H1	H2	H3	H4 ①	D1	D2	D3	Dia.	Weight Lbs (kg)
230 V	75–100	18.9 (480)	15.7 (400)	0.4 (9)	2.1 (54)	45.3 (1150)	44.1 (1120)	0.6 (16)	7.4 (188)	14.2 (361.5)	13.4 (340)	11.2 (285)	0.8 (21)	321.9 (146)
480 V	150–200													
575 V	100–175													

Note

① Brake resistor terminal box (H6) included when brake chopper ordered.

Approximate Dimensions in Inches (mm)

NEMA Type 1/IP21 and NEMA Type 12/IP54, FR9 with Flange Kit

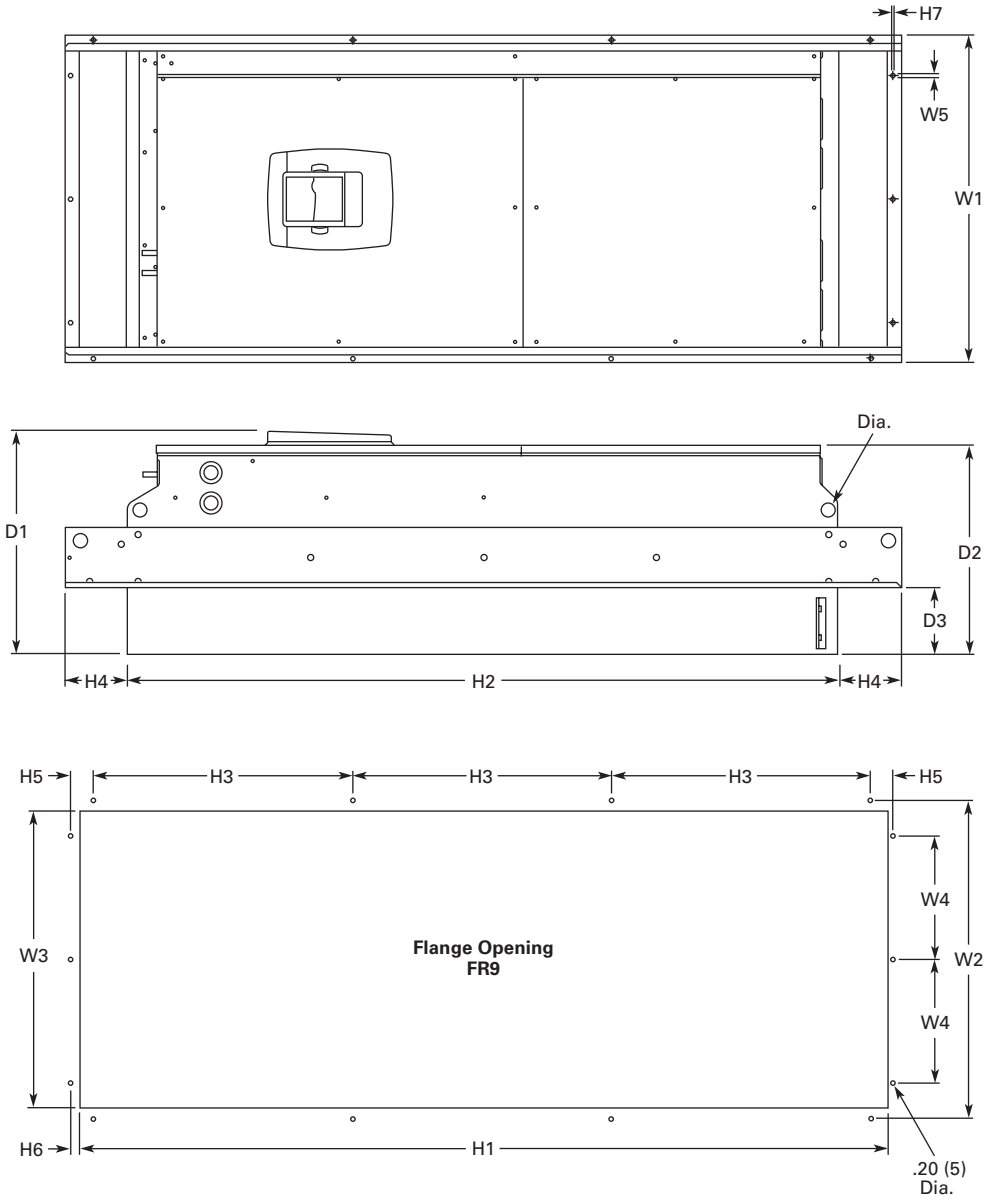

W1	W2	W3	W4	W5	H1	H2	H3	H4	H5	H6	H7	D1	D2	D3	Dia.
20.9 (530)	20.0 (510)	19.1 (485)	7.9 (200)	0.2 (5.5)	51.7 (1312)	45.3 (1150)	16.5 (420)	3.9 (100)	1.4 (35)	0.4 (9)	0.1 (2)	24.9 (362)	13.4 (340)	4.3 (109)	0.8 (21)

Approximate Dimensions in Inches (mm)

NEMA Type 1/IP21 and NEMA Type 12/IP54, FR10 Freestanding

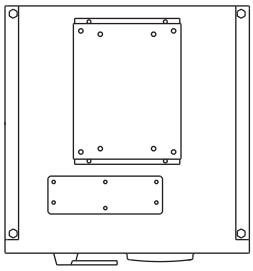

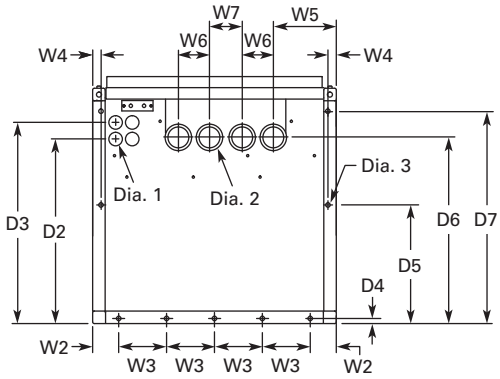

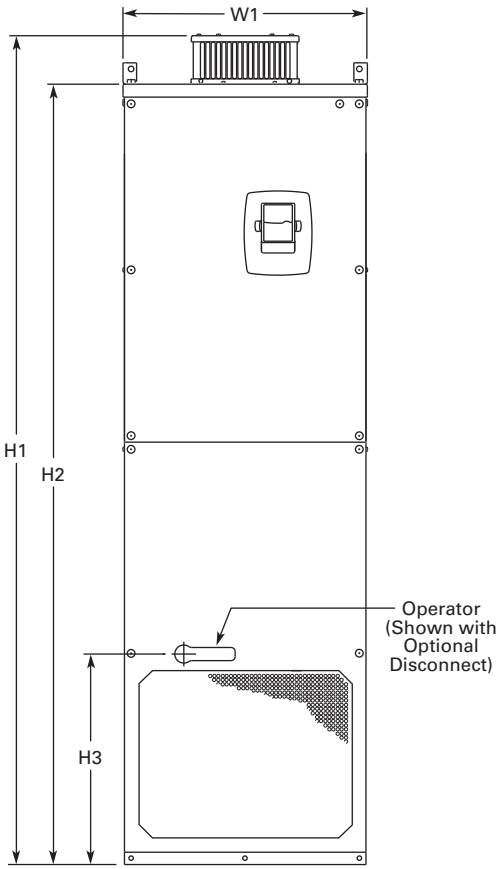

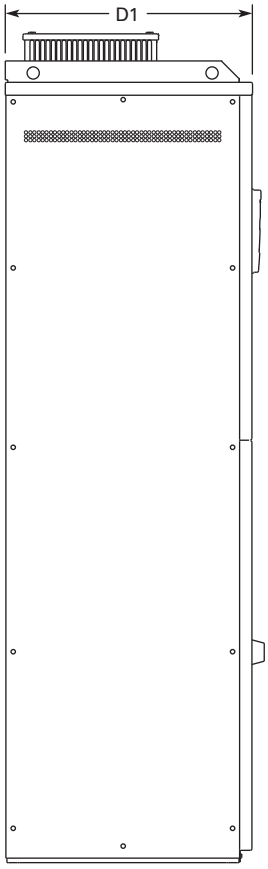

Volts	hp (I_H)	W1	W2	W3	W4	W5	W6	W7	H1	H2	H3	D1	D2	D3	D4	D5	D6	D7	Dia. 1	Dia. 2	Dia. 3	Weight Lbs (kg)
480 V	250–350	23.43	2.46	4.53	0.79	5.95	2.95	30.11	79.45	74.80	20.18	23.70	17.44	19.02	0.47	11.22	17.60	20.08	0.83	1.89	0.43	875 (389)
690 V	200–300	(595)	(62.5)	(115)	(20)	(151)	(75)	(79)	(2018)	(1900)	(512.5)	(602)	(443)	(483)	(12)	(285)	(447)	(510)	(21)	(48)	(11)	

Approximate Dimensions in Inches (mm)

FR10 Open Chassis ①

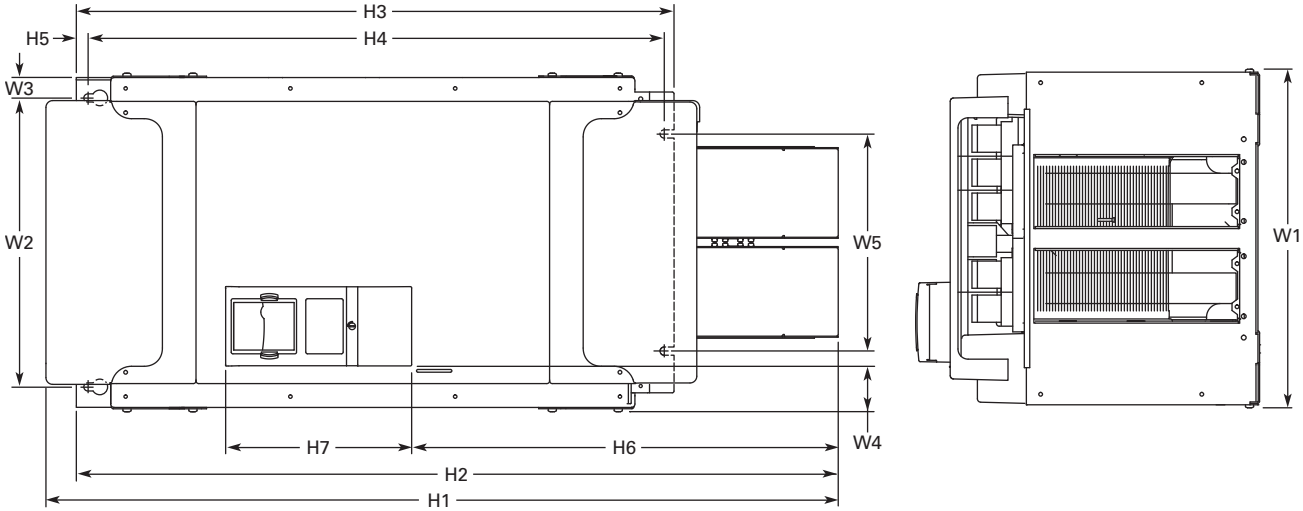

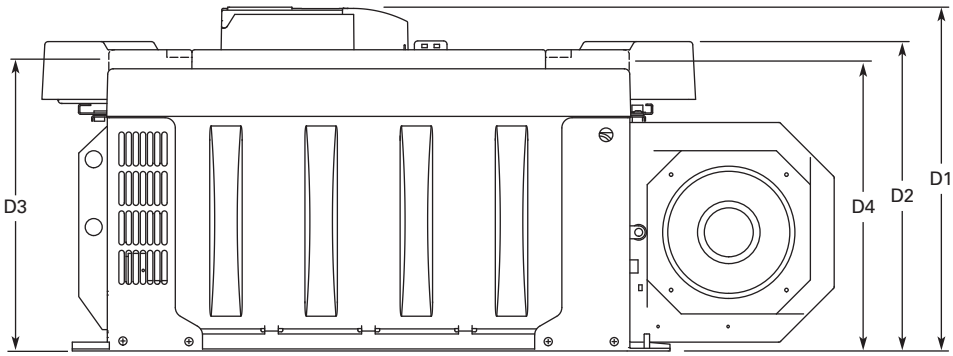

Voltage	hp (I_H)	W1	W2	W3	W4	W5	H1	H2	H3	H4	H5	H6	H7	D1	D2	D3	D4	Weight Lbs (kg)
480 V	250–350	19.7 (500)	16.7 (425)	1.2 (30)	2.6 (67)	12.8 (325)	45.9 (1165)	44.1 (1121)	34.6 (879)	33.5 (850)	0.7 (17)	24.7 (627)	10.8 (275)	19.9 (506)	17.9 (455)	16.7 (423)	16.6 (421)	518 (235)
575 V	200–300																	

Note

① SPXX FR12 is built of two FR10 modules. Please refer to SPX installation manual for mounting instructions.

Approximate Dimensions in Inches (mm)

NEMA Type 1/IP21, FR11 Freestanding Drive

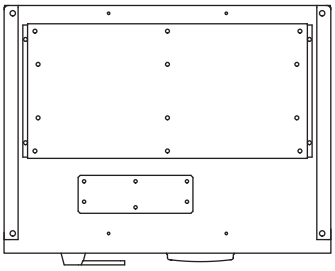

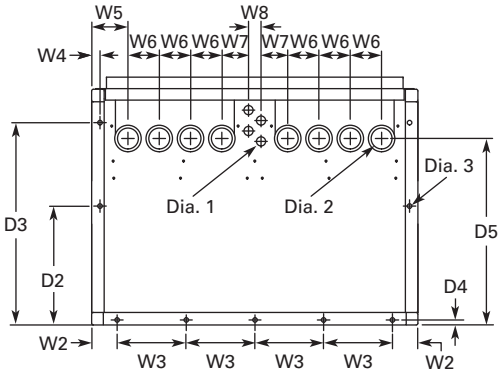

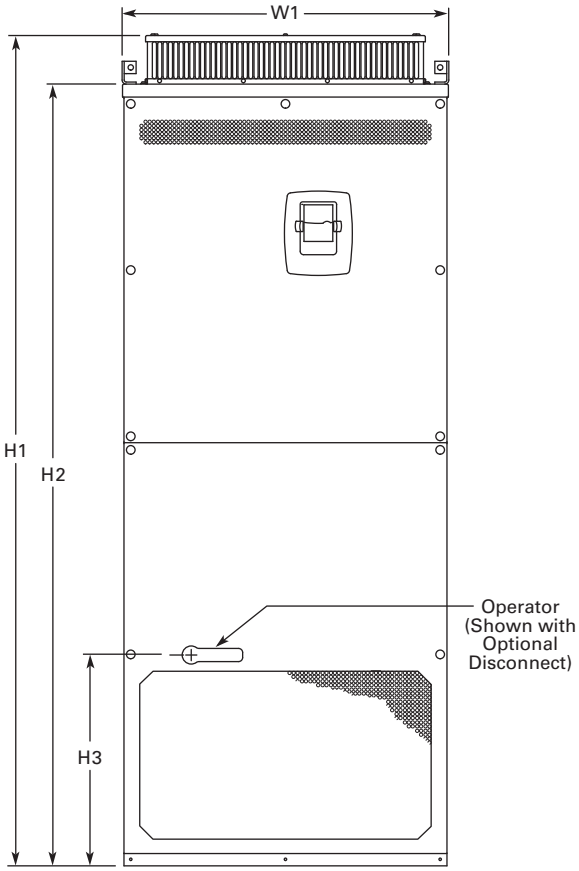

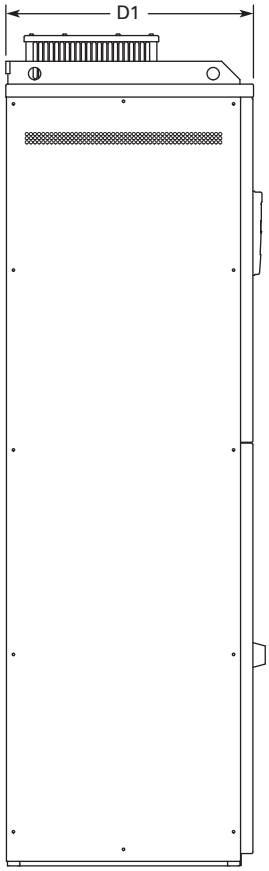

Voltage	hp (I_H)	W1	W2	W3	W4	W5	W6	W7	W8	H1	H2	H3	D1	D2	D3	D4	D5	Dia. 1	Dia. 2	Dia. 3	Weight Lbs (kg)
480 V	400–550	31.26 (794)	2.40 (61)	6.50 (165)	0.79 (20)	3.43 (87)	2.95 (75)	2.52 (64)	1.18 (30)	79.45 (2018)	74.80 (1900)	20.18 (512.5)	23.70 (602)	11.22 (285)	19.09 (485)	0.47 (12)	17.60 (447)	0.83 (21)	1.89 (48)	0.35 x 0.43 (9 x 11)	526 (239)
690 V	400–500																				

Approximate Dimensions in Inches (mm)

FR11 Open Chassis

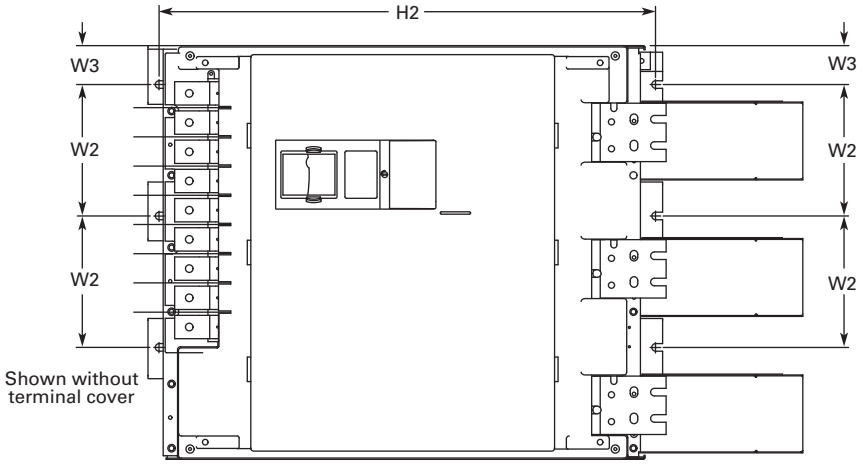

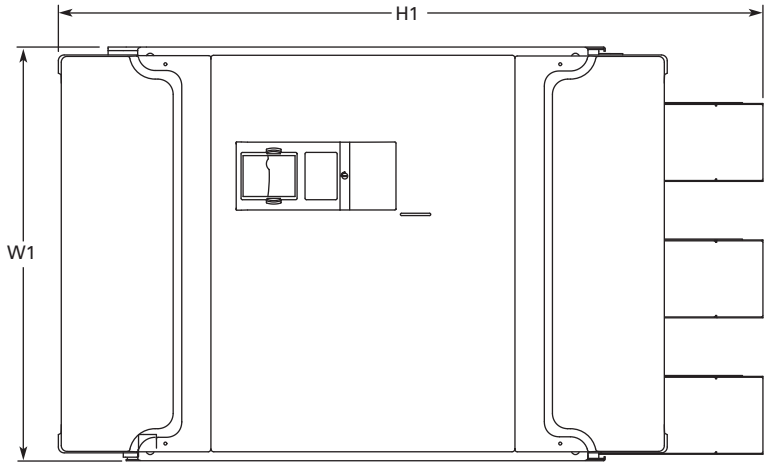

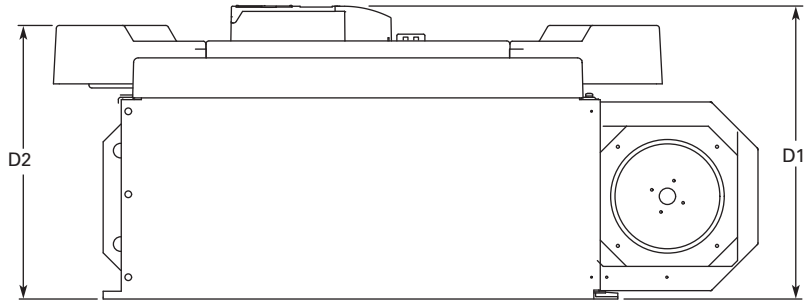

Voltage	hp (I_H)	W1	W2	W3	H1	H2	D1	D2	Weight Lbs (kg)
480 V	400–550	27.9 (709)	8.6 (225)	2.6 (67)	45.5 (1155)	33.5 (850)	19.8 (503)	18.4 (468)	833 (378)
575 V	400–500								

Approximate Dimensions in Inches (mm)

FR13, Open Chassis Inverter

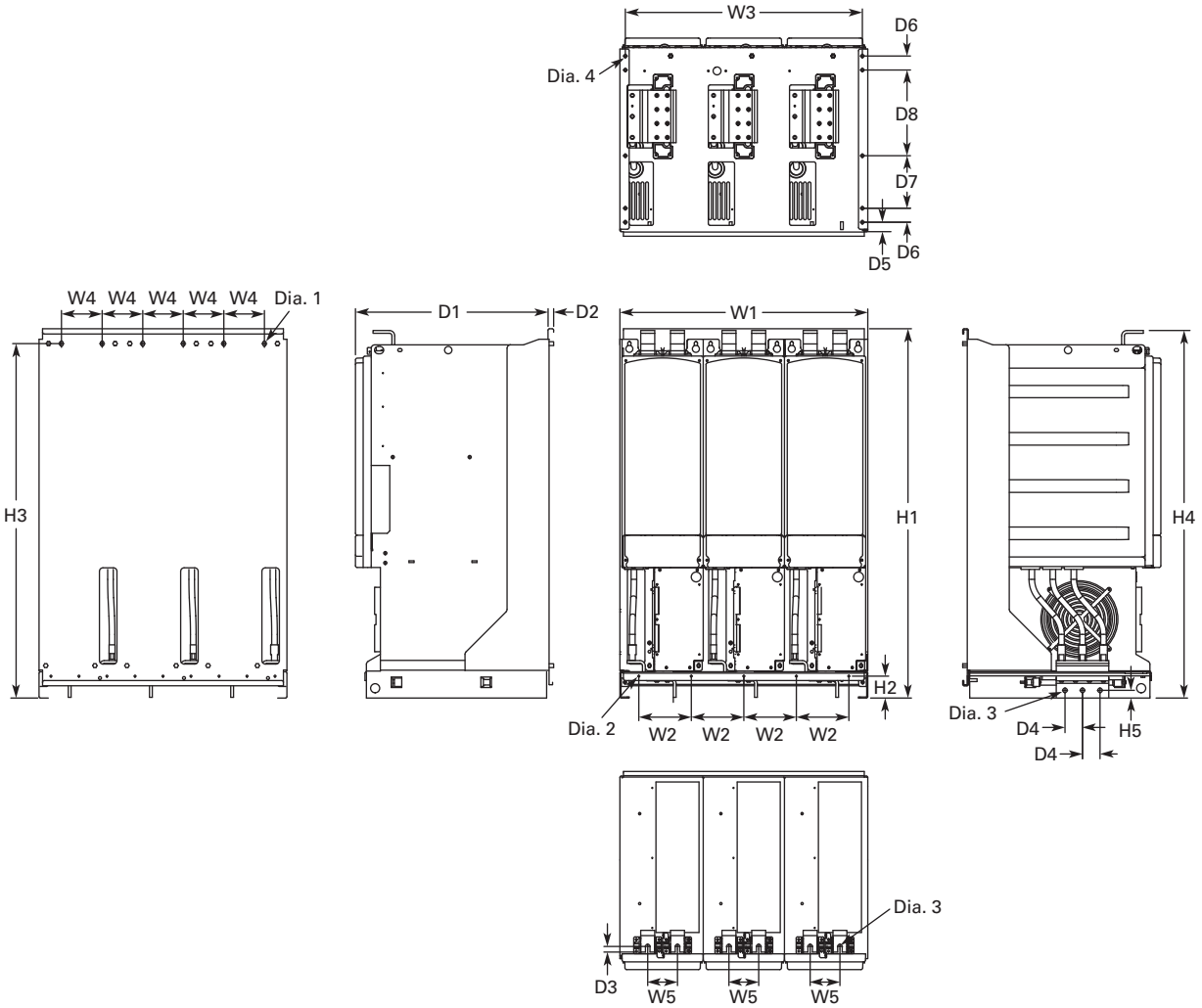

W1	W2	W3	W4	W5	H1	H2	H3	H4	H5	D1	D2	D3	D4	D5	D6	D7	D8	Dia. 1	Dia. 2	Dia. 3	Dia. 4	Weight Lbs (kg)
27.87 (708)	5.91 (150)	26.65 (677)	4.57 (116)	3.35 (85)	41.54 (1055)	2.46 (62.5)	39.86 (1012.5)	41.34 (1050)	0.79 (20)	21.77 (553)	0.51 (13)	0.63 (16)	1.97 (50)	1.06 (27)	1.57 (40)	5.91 (150)	9.64 (244.8)	0.35x0.59 (9x15)	0.18 (4.6)	0.51 (13)	0.37 (9.5)	683 (310)

Notes

9000X FR14 is built of two FR13 modules. Please refer to SPX installation manual for mounting instructions.

FR13 is built from an inverter module and a converter module. Please refer to SPX installation manual for mounting instructions.

Approximate Dimensions in Inches (mm)

FR13, Open Chassis Converter

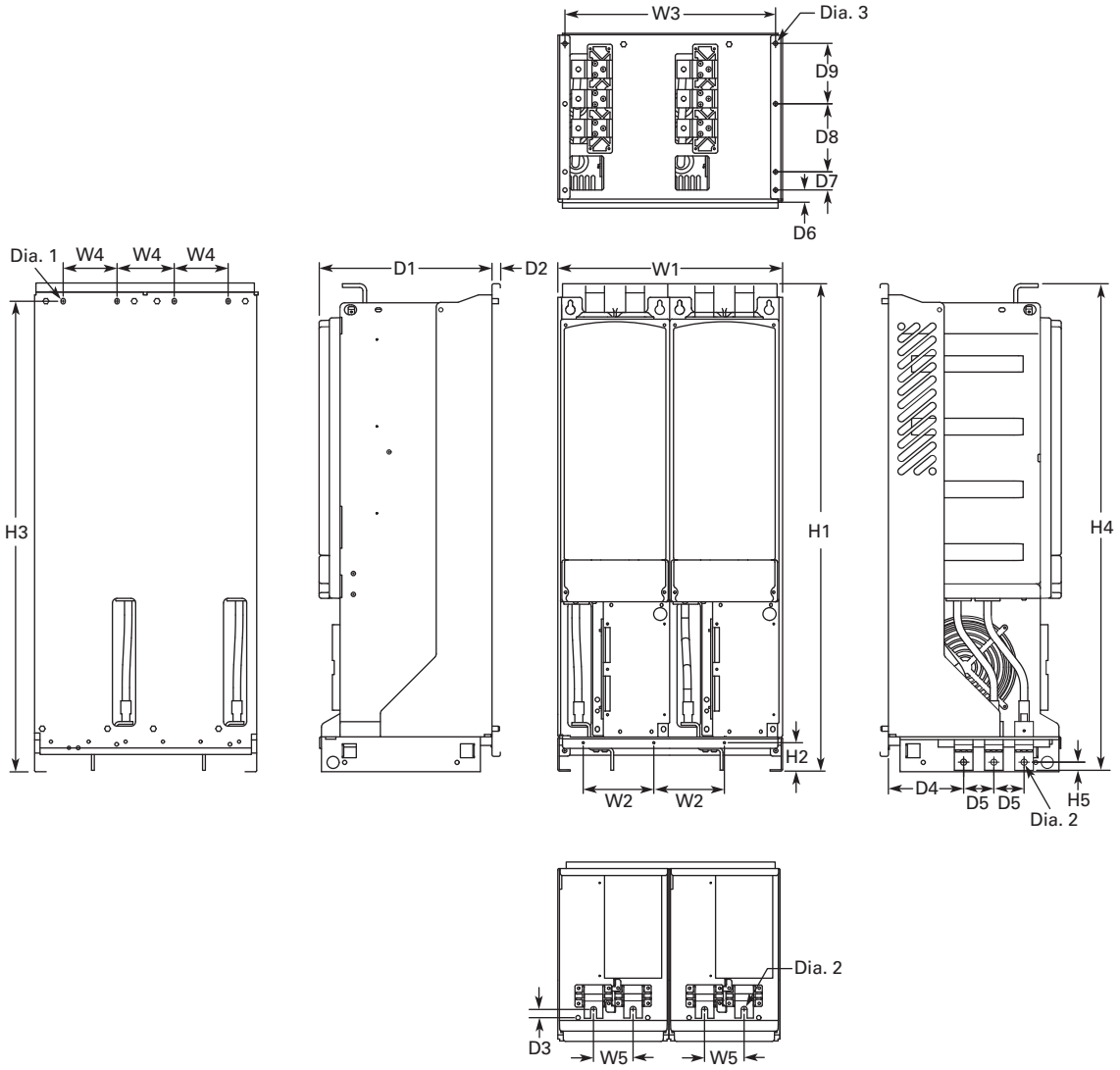

W1	W2	W3	W4	W5	H1	H2	H3	H4	H5	D1	D2	D3	D4	D5	D6	D7	D8	D9	Dia. 1	Dia. 2	Dia. 3	Weight Lbs (kg)
18.74 (476)	5.91 (150)	17.52 (445)	4.57 (116)	3.35 (85)	41.54 (1055)	2.46 (62.5)	39.86 (1012.5)	41.34 (1050)	0.69 (17.5)	14.69 (373)	0.51 (13)	0.73 (18.5)	6.42 (163)	2.56 (65)	1.06 (27)	1.57 (40)	5.91 (150)	5.24 (133)	0.35x0.59 (9x15)	0.51 (13)	0.37 (9.5)	295 (134)

Number of Input Units

480 V Catalog Number	hp	Input Modules
SPX800 A0-4 A2N1	800	2

690 V Catalog Number	hp	Input Modules
SPX800 A0-5 A2N1	800	2
SPX900 A0-5 A2N1	900	2
SPXH10 A0-5 A2N1	1000	2

Approximate Dimensions in Inches (mm)

FR13, Open Chassis Converter—900/1000 hp 480 V

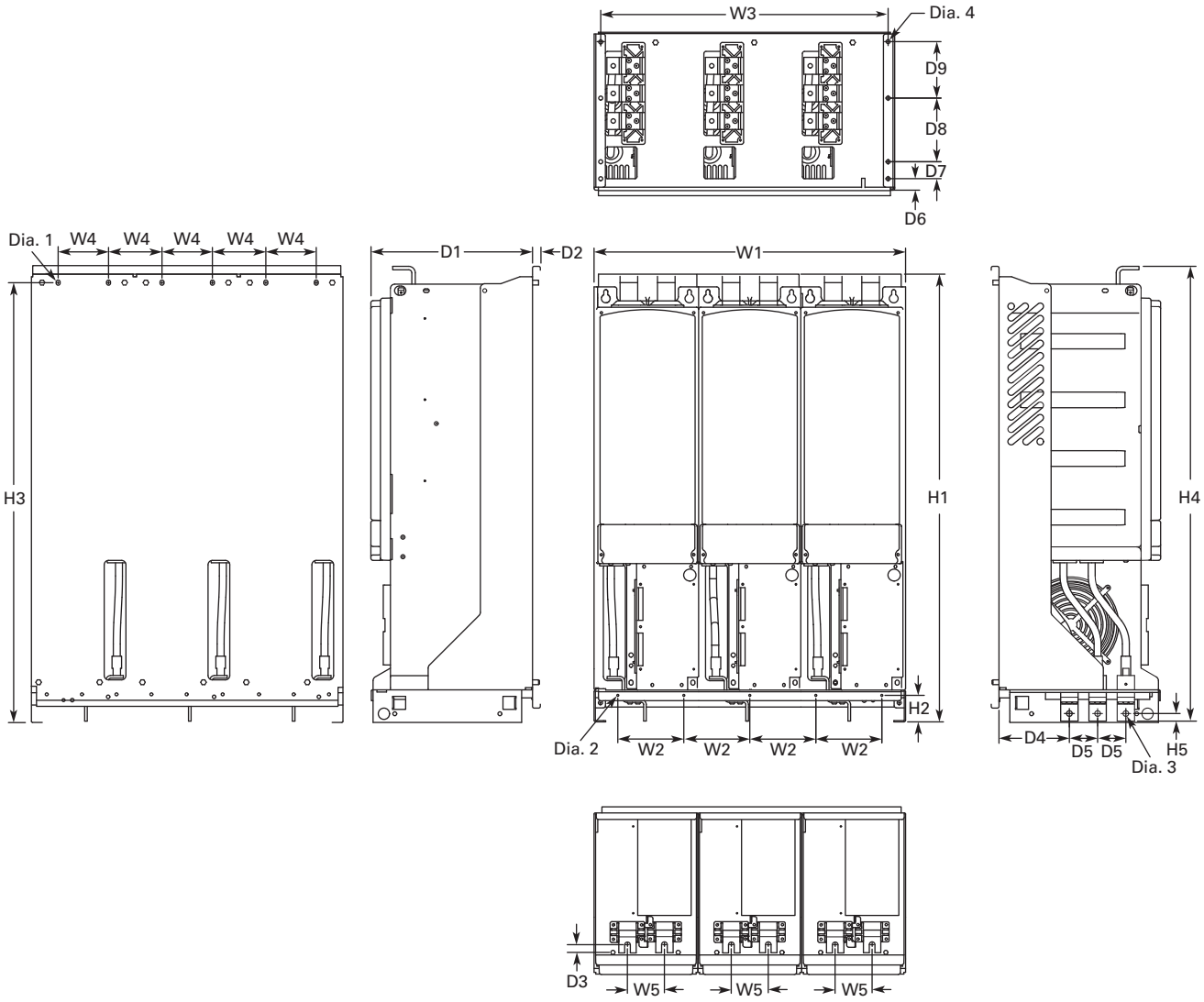

W1	W2	W3	W4	W5	H1	H2	H3	H4	H5	D1	D2	D3	D4	D5	D6	D7	D8	D9	Dia. 1	Dia. 2	Dia. 3	Dia. 4	Weight Lbs (kg)
27.87 (708)	5.91 (150)	26.65 (677)	4.57 (116)	3.35 (85)	41.54 (1055)	2.46 (62.5)	39.86 (1012.5)	41.34 (1050)	0.69 (17.5)	14.69 (373)	0.51 (13)	0.73 (18.5)	6.42 (163)	2.56 (65)	1.06 (27)	1.57 (40)	5.91 (150)	5.24 (133)	0.35x0.59 (9x15)	0.18 (4.6)	0.51 (13)	0.37 (9.5)	443 (201)

Number of Input Units

480 V Catalog Number	hp	Input Modules
SPX900 A0-4 A2N1	900	3
SPXH10 A0-4 A2N1	1000	3

Approximate Dimensions in Inches (mm)

AC Choke Dimensions

Choke Types

Catalog Number	Frame Size	Choke Type ①
Voltage Range 380–500 V		
SPX 250 4	FR10	CHK0400
SPX 300 4		CHK0520
SPX 350 4		CHK0520
SPX 400 4	FR11	2 x CHK0400
SPX 500 4		2 x CHK0400
SPX 550 4		2 x CHK0400
SPX 600 4	FR12	2 x CHK0520
SPX 650 4		2 x CHK0520
SPX 700 4		2 x CHK0520
SPX 800 4	FR13	2 x CHK0400
SPX 900 4		3 x CHK0520
SPX H10 4		3 x CHK0520
SPX H12 4	FR14	4 x CHK0520
SPX H16 4		6 x CHK0400

Catalog Number	Frame Size	Choke Type ①
Voltage Range 525–690 V		
SPX 200 5	FR10	CHK0261
SPX 250 5		CHK0400
SPX 300 5		CHK0400
SPX 400 5	FR11	CHK0520
SPX 450 5		CHK0520
SPX 500 5		2 x CHK0400
SPX 550 5	FR12	2 x CHK0400
SPX 600 5		2 x CHK0400
SPX 700 5		2 x CHK0400
SPX 800 5	FR13	2 x CHK0400
SPX 900 5		2 x CHK0400
SPX H10 5		2 x CHK0400
SPX H13 5	FR14	4 x CHK0400
SPX H15 5		6 x CHK0400

CHK0520

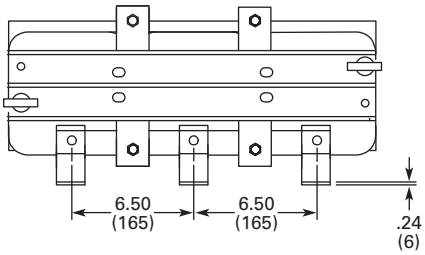

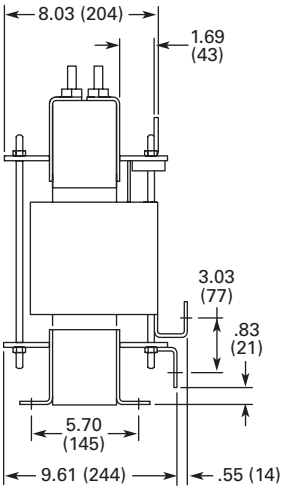

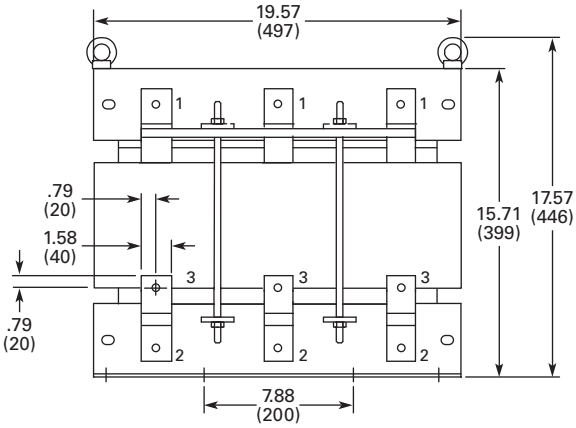

Note

① Chokes are provided with all FR10–FR14 drives.

Approximate Dimensions in Inches (mm)

CHK0400

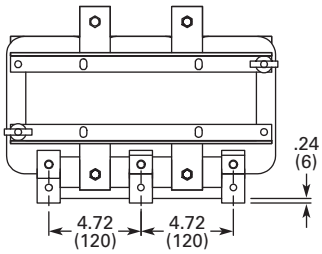

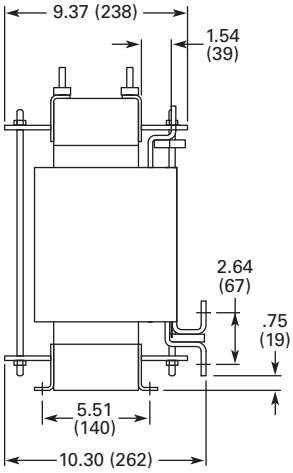

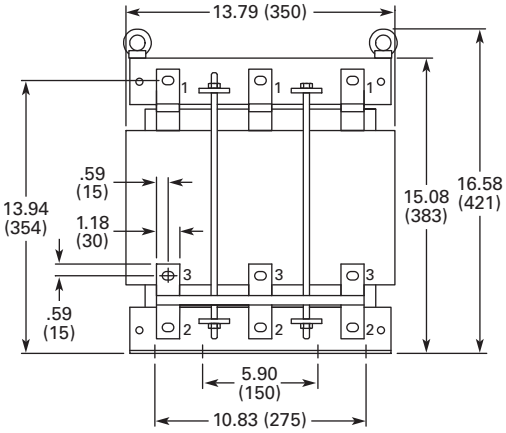

CHK0261

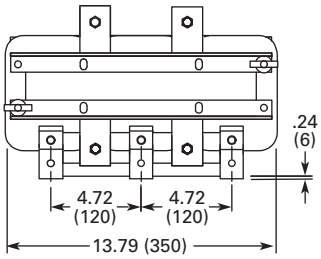

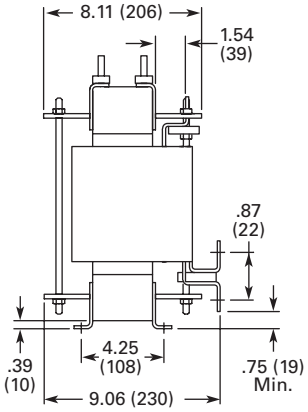

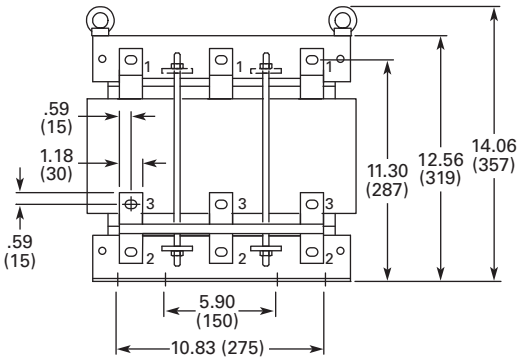

Clean Power Drives

Contents

Description	*Page*
Clean Power Drives Overview	**V6-T2-245**
Enclosed Passive Filtered Drives	
EGF Enclosed Drives	**V6-T2-252**
CFX Enclosed Drives	**V6-T2-272**
HCX Enclosed 12-Pulse Drives	**V6-T2-298**
CPX Enclosed 18-Pulse Drives	**V6-T2-302**
RGX Enclosed Regenerative Drives	**V6-T2-326**

Clean Power Drives Overview

What Are Harmonics?

Take a perfect wave with a fundamental frequency of 60 Hz, which is close to what is supplied by the power company.

Perfect Wave

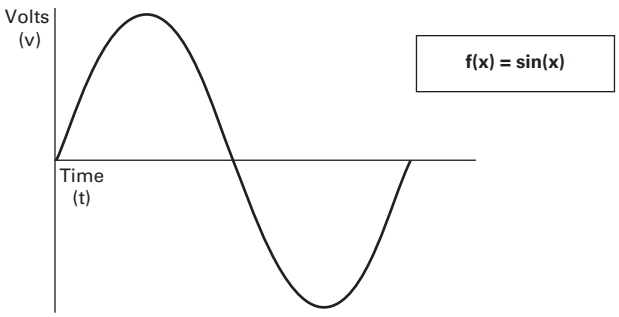

Add a second wave that is five times the fundamental frequency—300 Hz (typical of frequency added to the line by a fluorescent light).

Second Wave

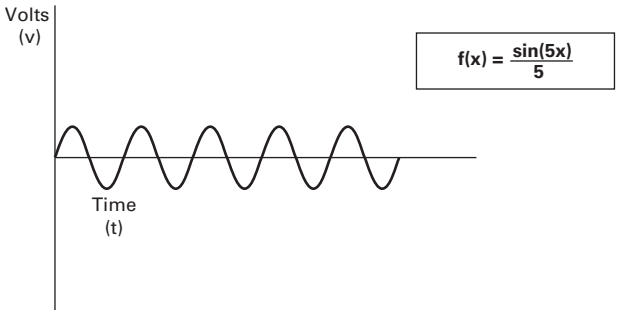

Combine the two waves. The result is a 60 Hz supply rich in fifth harmonics.

Resulting Supply

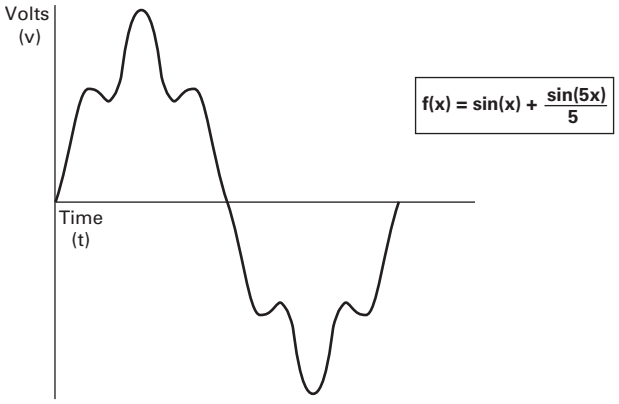

What Causes Harmonics?

Harmonics are the result of nonlinear loads that convert AC line voltage to DC. Examples of equipment that are non-linear loads are listed below:

- AC variable frequency drives
- DC drives
- Fluorescence lighting, computers, UPS systems
- Industrial washing machines, punch presses, welders, etc.

How Can Harmonics Due to VFDs Be Diminished?

By applying drives from the Eaton Clean Power drives family: EGF and CFX passive filtered drives, HCX 12-pulse drives, EGP and CPX 18-pulse drives, and RGX regenerative drives.

What Are Linear Loads?

Linear loads are primarily devices that run across the line and do not add harmonics. Motors are prime examples. The downside to having large motor linear loads is that they draw more energy than a VFD, because of their inability to control motor speed. In most applications there is a turn down valve used with the motor which will reduce the flow of the material, without significantly reducing the load to the motor. While this provides some measure of speed control, it is extremely inefficient.

Why Be Concerned About Harmonics?

1. ***Installation and utility costs increase.*** Harmonics cause damage to transformers and lower efficiencies due to the voltage drop. These losses can become significant (from 16.6–21.6%) which can have a dramatic effect on the HVAC systems that are controlling the temperatures of the building where the transformer and drive equipment reside.
2. ***Downtime and loss of productivity.*** Telephones and data transmissions links may not be guaranteed to work on the same power grids polluted with harmonics.
3. ***Downtime and nuisance trips of drives and other equipment.*** Emergency generators have up to three times the impedance that is found in a conventional utility source. Thus the harmonic voltage can be up to three times as large, causing risk of operation problems.
4. ***Larger motors must be used.*** Motors running across the line that are connected on polluted power distribution grids can overheat or operate at lower efficiency due to harmonics.
5. ***Higher installation costs.*** Transformers and power equipment must be oversized to accommodate the loss of efficiencies. This is due to the harmonic currents circulating through the distribution without performing useful work.

How Does a VFD Convert Three-Phase AC to a Variable Output Voltage and Frequency?

The six-pulse VFD: The majority of all conventional drives that are built consist of a six-pulse configuration. The figure below represents a six-diode rectifier design that converts three-phase utility power to DC. The inverter section uses IGBTs to convert DC power to a simulated AC sine wave that can vary in frequency from 0–400 Hz.

The six-pulse VFD drive creates harmonic current distortion. The harmonic current that is created is energy that can not be used by customers and causes external heat and losses to all components including other drives that are on the same power distribution. The figure is a 100 hp drive with 45 A of damaging harmonic current.

100 hp Six-Diode Rectifier Design

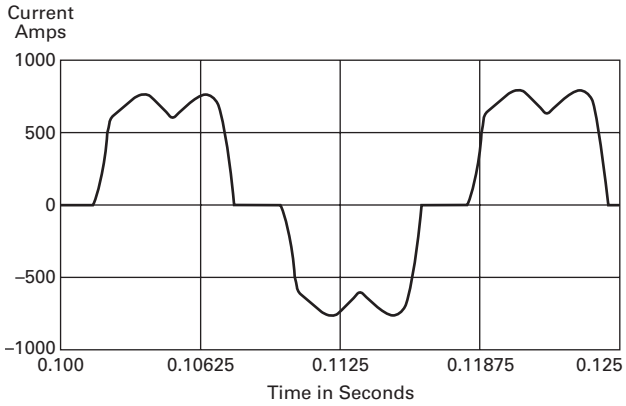

100 hp Six-Pulse Nonproductive Harmonic Current

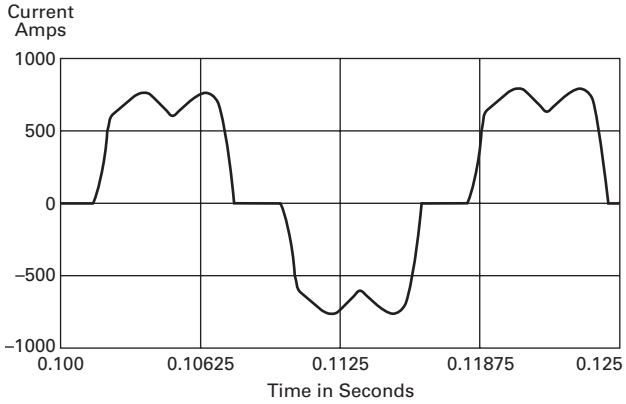

Six-Pulse Nonproductive Harmonic Current

Six-Pulse Circuit

Current harmonics		
I_1 = 100%	I_{11} = 6.10%	I_{19} = 1.77%
I_5 = 22.5%	I_{13} = 4.06%	I_{23} = 1.12%
I_7 = 9.38%	I_{17} = 2.26%	I_{25} = 0.86%
Power = 100 hp		
Harmonic current = 45 amps		

Guidelines of Meeting IEEE Std. 519-2014 Harmonic Distortion Limits

The IEEE 519-2014 Specification is a standard that provides guidelines for commercial and industrial users that are implementing medium and low voltage equipment.

Current Distortion Limits for Systems Rated 120 V through 69 kV

Maximum Harmonic Current Distortion in percent of I_L

Individual Harmonic Order (Odd Harmonics) ①②

I_{sc}/I_L	3 ≤ h < 11	11 ≤ h < 17	17 ≤ h < 23	23 ≤ h < 35	35 ≤ h ≤ 50	TDD
<20 ③	4.0	2.0	1.5	0.6	0.3	5.0
20 <50	7.0	3.5	2.5	1.0	0.5	8.0
50 <100	10.0	4.5	4.0	1.5	0.7	12.0
100 <1000	12.0	5.5	5.0	2.0	1.0	15.0
>1000	15.0	7.0	6.0	2.5	1.4	20.0

Notes

① Even harmonics are limited to 25% of the odd harmonic limits shown in table above.

② Current distortions that result in a DC offset, e.g., half-wave converters, are not allowed.

③ All power generation equipment is limited to these values of current distortion, regardless of actual I_{sc}/I_L.

where

I_{sc} = maximum short-circuit current at PCC.

I_L = maximum demand load current (fundamental frequency component) at the PCC under normal load operating conditions.

One-Line Diagram for Harmonic Analysis

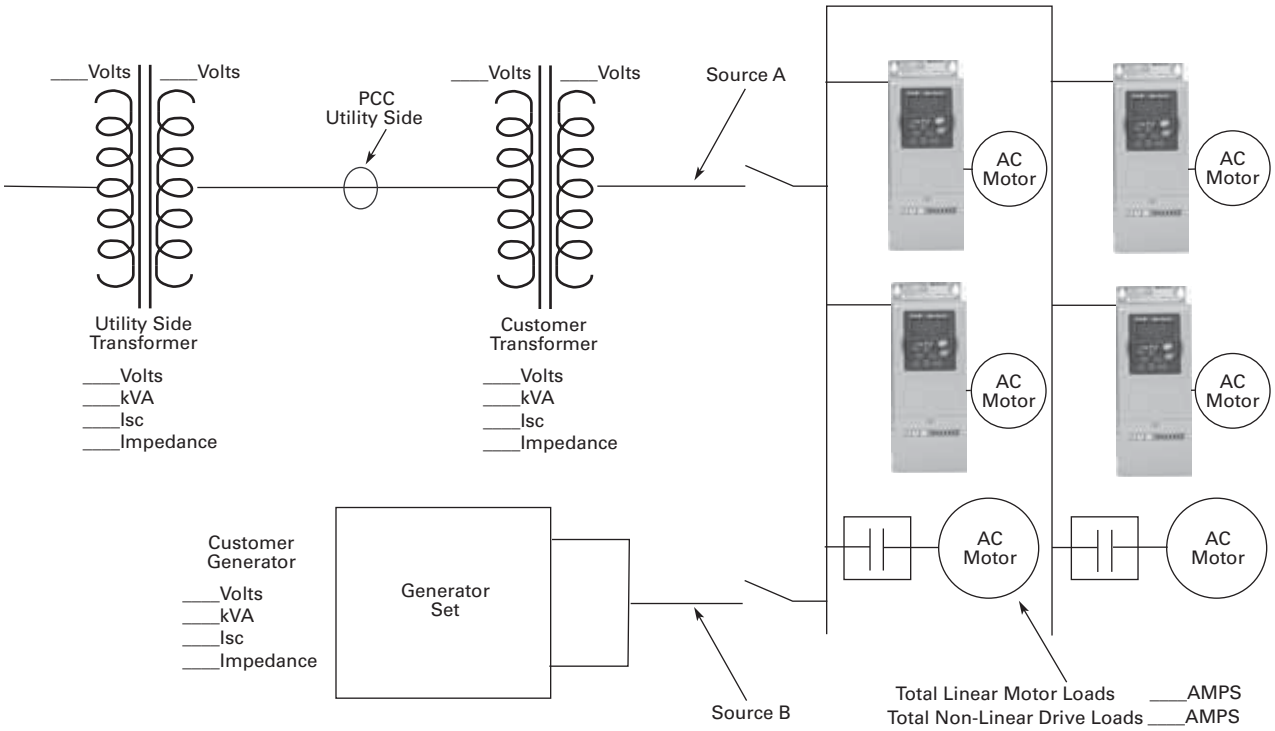

The best way to estimate AFD harmonic contribution to an electrical system is to perform a harmonic analysis based on known system characteristics. The one line in this figure would provide the data to complete the calculations.

Terms

- PCC (Point of Common Coupling) is defined as the electrical connecting point between the utility and multiple customers per the specifications in IEEE 519
- POA (Point of Analysis) is defined as where the harmonic calculations are taken

An oscilloscope can make all measurements at the PCC or POA to do an on-site harmonic evaluation.

Harmonic Reduction Methods to Meet IEEE 519

1. Line Reactor

A line reactor is a three-phase series inductance on the line side of an AFD. If a line reactor is applied on all AFDs, it is possible to meet IEEE guidelines where 10–25% of system loads are AFDs, depending on the stiffness of the line and the value of line reactance. Line reactors are available in various values of percent impedance, most typically 1–1.5%, 3% and 5%.

Note: The SVX/SPX drives come standard with a nominal 3% input impedance.

Line Reactor

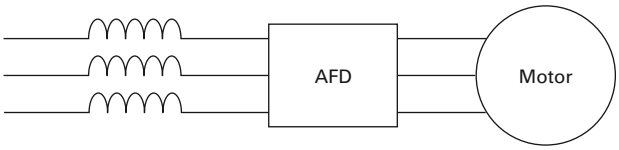

Advantages

- Low cost
- Can provide moderate reduction in voltage and current harmonics
- Available in various values of percent impedance
- Provides increased input protection for AFD and its semiconductors from line transients

Disadvantages

- May not reduce harmonic levels to below IEEE 519-2014 guidelines
- Voltage drop due to IR loss

2. Passive Filters

Tuned harmonic filters involve the series connection of an inductor with the shunt connection of an inductor and capacitor to form a low impedance path to ground for a specific range of frequencies. This path presents an alternative to the flow of harmonic currents back into the utility source.

Enclosed Drive with Integrated Passive Filter

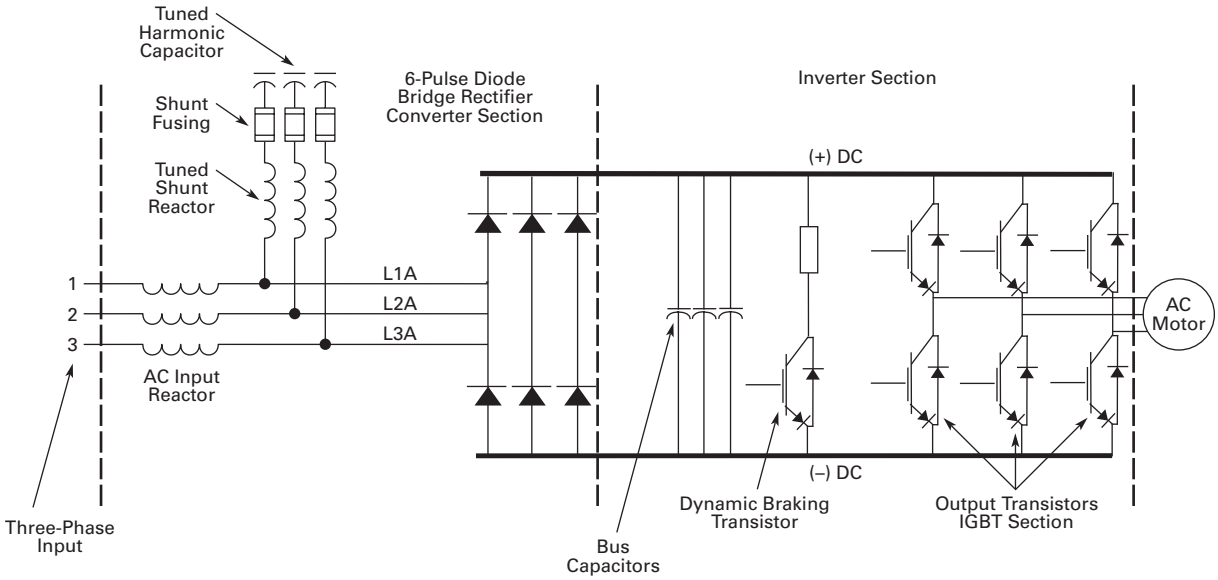

100 hp Enclosed 480 V Drive with Integrated Passive Filter

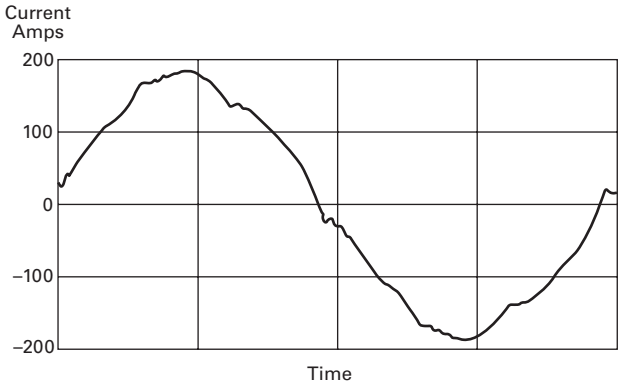

100 hp Enclosed 480 V Drive with Integrated Passive Filter

Passive Filter

Current harmonics		
I_1 = 100%	I_{11} = 0.24%	I_{19} = 0.50%
I_5 = 3.76%	I_{13} = 1.1%	I_{23} = 0.55%
I_7 = 1.65%	I_{17} = 0.80%	I_{25} = 0.80%
Power = 100 hp		
H_c = 8.6 Amps		

Advantages

- Low cost for smaller horsepower applications
- More effective harmonic attenuation than 12-pulse drives
- Provides increased input protection for AFD from line transients

Disadvantages

- Capacitors age over time, unlike magnetics
- Not as effective as 18-pulse drives
- Challenging to retrofit with bypass applications

3. 12-Pulse Converters

A 12-pulse converter incorporates two separate AFD input semiconductor bridges, which are fed from 30° phase shifted power sources with identical impedance. The sources may be two isolation transformers, where one is a delta/wye design (which provides the phase shift) and the second a delta/delta design (which does not phase shift). The 12-pulse arrangement allows the harmonics from the first converter to cancel the harmonics of the second. Up to approximately 85% reduction of harmonic current and voltage distortion may be achieved (over standard six-pulse converter). This permits a facility to use a larger percentage of AFD loads under IEEE 519-2014 guidelines than allowable using line reactors or DC chokes. A harmonic analysis is required to guarantee compliance with guidelines.

Basic 12-Pulse Rectifier with "Phase Shifting" Transformer

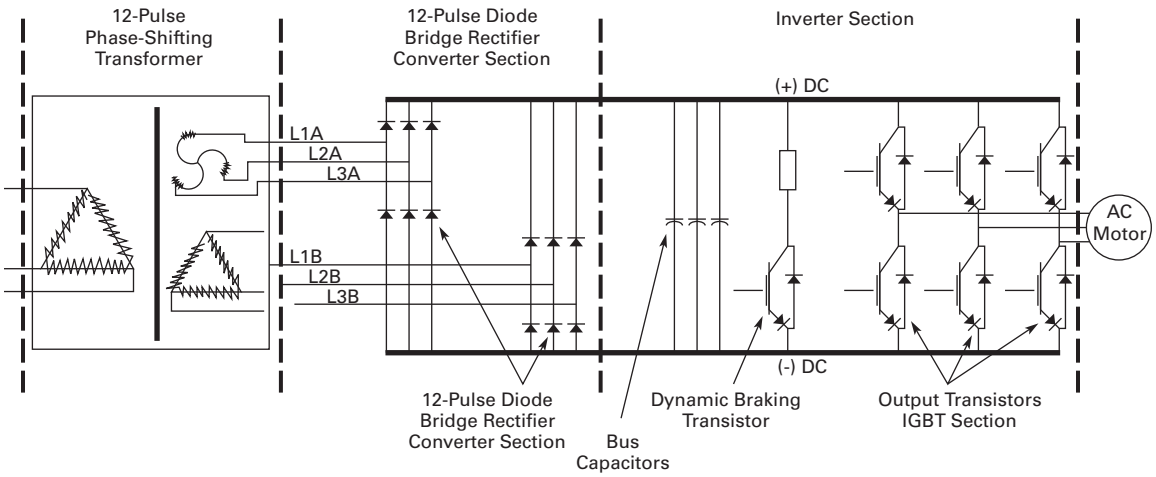

100 hp 480 V Drive with 12-Pulse Rectifier

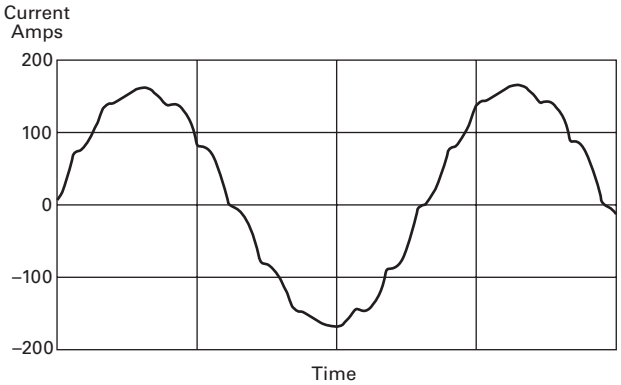

100 hp 480 V Drive with 12-Pulse Rectifier

12-Pulse Circuit

Current harmonics		
I_1 = 100%	I_{11} = 4.19%	I_{19} = 0.06%
I_5 = 1.25%	I_{13} = 2.95%	I_{23} = 0.87%
I_7 = 0.48%	I_{17} = 0.21%	I_{25} = 0.73%
Power = 100 hp		
H_c = 20 Amps		

Advantages

- Reasonable cost, although significantly more than reactors or chokes
- Substantial reduction (up to approx. 85%) in voltage and current harmonics
- Provides increased input protection for AFD and its semiconductors from line transients

Disadvantages

- Impedance matching of phase shifted sources is critical to performance
- Transformers often require separate mounting or larger AFD enclosures
- May not reduce distribution harmonic levels to below IEEE 519-2014 guidelines
- Cannot retrofit for most AFDs

4. 18-Pulse Converters

When the total load is comprised of non-linear load such as drives, and the ratio is I_{SC}/I_L, the greatest harmonic mitigation is required. Under these conditions, the currents drawn from the supply need to be sinusoidal and "clean" such that system interference and additional losses are negligible. Eaton's enclosed 18-pulse drive uses a phase-shifting auto-transformer with delta-connected winding that carries only the ampere-turns caused by the difference in load currents. This results in nine separate phases. In this type of configuration, the total kVA rating of the transformer magnetic system was only 48% that of the motor load. A traditional isolated transformer system, with multipulse windings, would require the full kVA rating to be supported, which is more common in an MV step-down transformer.

The integrated 18-pulse drive, with near sine wave input current and low harmonics will meet the requirements of IEEE 519-2014 under all practical operating conditions. The comparisons with six-pulse passive filter and 12-pulse systems are shown on **Pages V6-T2-246**, **V6-T2-248** and below.

Basic 18-Pulse Rectifier with Phase-Shifting Auto-Transformer

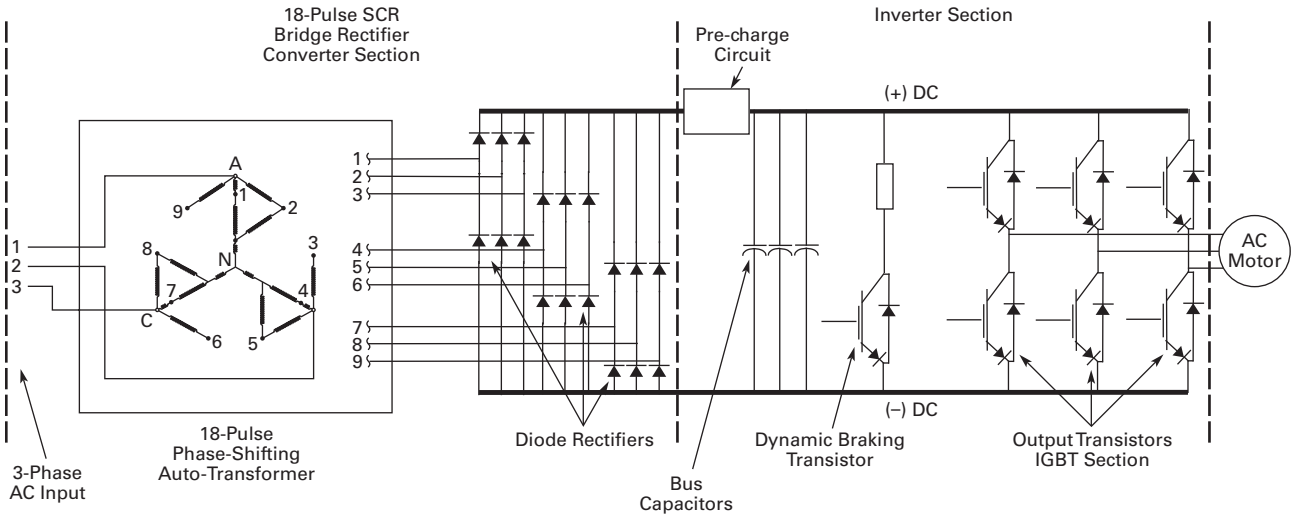

100 hp 480 V Drive with 18-Pulse Rectifiers

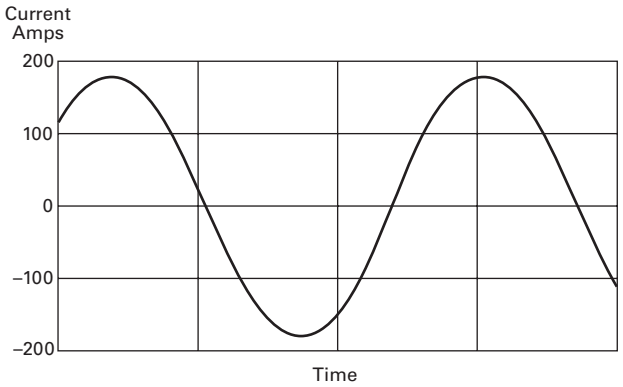

100 hp 480 V Drive with 18-Pulse Rectifiers

18-Pulse Clean Power

Current harmonics		
I_1 = 100%	I_{11} = 0.24%	I_{19} = 1.00%
I_5 = 0.16%	I_{13} = 0.10%	I_{23} = 0.01%
I_7 = 0.03%	I_{17} = 0.86%	I_{25} = 0.01%
Power = 100 hp		
H_c = 5.9 Amps		

Advantages

- Effectively guarantees compliance with IEEE 519-2014
- Provides increased input protection for AFD and its semiconductors from line transients
- Up to 4 times the harmonic reduction of 12-pulse methods
- Smaller transformer than isolation transformer used in 12-pulse converter
- Minimizes ripple current in capacitors, doubling expected capacitor life

Disadvantages

- Not as cost effective as some other methods at small (<50) horsepower

Enclosed Passive Filtered Drives

Contents

Description	*Page*
Clean Power Drives Overview	**V6-T2-245**
Enclosed Passive Filtered Drives	
EGX Enclosed Drives	**V6-T2-252**
CFX Enclosed Drives	**V6-T2-272**
Enclosed 12-Pulse Drives	**V6-T2-298**
Enclosed 18-Pulse Drives	**V6-T2-302**
Enclosed Regenerative Drives	**V6-T2-326**

EGF Enclosed Drives

Contents

Description	*Page*
Clean Power Drives Overview	**V6-T2-245**
Enclosed Passive Filtered Drives	
EGF Enclosed Drives	
Product Identification	**V6-T2-273**
Catalog Number Selection	**V6-T2-253**
Production Selection	**V6-T2-255**
Enclosure Selection	**V6-T2-256**
Options	**V6-T2-257**
Technical Data and Specifications	**V6-T2-258**
Wiring Diagram	**V6-T2-260**
Dimensions	**V6-T2-261**
CFX Enclosed Drives	**V6-T2-272**
Enclosed 12-Pulse Drives	**V6-T2-298**
Enclosed 18-Pulse Drives	**V6-T2-302**
Enclosed Regenerative Drives	**V6-T2-326**

EGF Enclosed Drives

Product Description

Eaton's Enclosed EGF Drives combine harmonic distortion reduction and true power factor performance with the latest in Eaton adjustable frequency drive technology to deliver an industry-leading solution. This pre-engineered passive filtered solution prevents transformer overheating and overloading of breakers and feeders, which enables the application of adjustable frequency drives on generators and other high impedance power systems.

Features and Benefits

- Tuned passive filter
- Delivers 5–8% THD
- Generator compatible
- Uses the same DG1, SVX or SPX drive that is stocked in the warehouse
- Simple to retrofit
- Provides a low-impedance path to ground for the harmonic frequencies
- Meets IEEE 519-2014
- Excellent cost for performance
- Small footprint, compact enclosure design
- Insensitive to voltage imbalance
- Customizable cover control options
- Padlockable disconnect
- The PowerXL DG1 comes standard with the following communication protocols:
  - EtherNet/IP
  - Modbus/TCP
  - Modbus RTU
  - BACnet MS/TP

Communication Options

- PROFIBUS-DP
- LonWorks
- CANopen
- DeviceNet

Enclosure Ratings

- NEMA Type 1
- NEMA Type 12
- NEMA Type 3R

Mounting

- Wall mount
- Floor mount: 12-inch legs
- Floor mount: 22-inch legs

Product Range

- 480 V: 1–250 hp

Standards and Certifications

- UL 508C

Listed

Catalog Number Selection

Catalog Number Selection is for reference only. Not all option combinations may be available.

EGF Enclosed—Base Catalog Number

EGF 3D5 1 D 1 _ _ _ _ _ _

Product Family

EGF = Enclosed DG1 drives—passive filtered

Output Ampere Rating

480 V	
011 = 11 A, 7.5 hp	**077** = 77 A, 60 hp
014 = 14 A, 10 hp	**096** = 96 A, 75 hp
021 = 21 A, 15 hp	**124** = 124 A, 100 hp
027 = 27 A, 20 hp	**156** = 156 A, 125 hp
034 = 34 A, 25 hp	**180** = 180 A, 150 hp
040 = 40 A, 30 hp	**240** = 240 A, 200 hp
052 = 52 A, 40 hp	**302** = 302 A, 250 hp
065 = 65 A, 50 hp	

Phasing and Voltage

4 = Input: Three-phase, 480 V Output: Three-phase

Braking/Application ①

A = No brake chopper, low overload
B = Brake chopper, low overload
C = No brake chopper, high overload
D = Brake chopper, high overload

Enclosure Rating ②

1 = NEMA Type 1
2 = NEMA Type 12
3 = NEMA Type 3R
• = Custom option

Options ③

See **Page V6-T2-254** for catalog number option selection.

Notes

① Brake chopper is a factory-installed option only. Braking resistors sold separately. See DG1 drives starting on **Page V6-T2-55** for selection.
② Additional enclosure options including NEMA 4 and 4X are available. Please contact the factory for configuration and pricing.
③ Part number configuration continued on the following page.

Catalog Number Selection is for reference only. Not all option combinations may be available.

EGF Enclosed—Catalog Number Options

EGF 3D5 1 D 1 2 0 0 B 1 0 0 0 0

Base Catalog Number Example

See **Page V6-T2-253** for base catalog number selection.

Power Disconnect Options

0 = None
1 = MCP disconnect ①
2 = Circuit breaker
3 = Circuit breaker/isolation fusing
5 = Circuit breaker/isolation fusing/SPD
8 = Circuit breaker/SPD
A = Fused disconnect
B = Fused disconnect/SPD
E = Isolation fuses
G = Isolation fuses/SPD
• = Custom option ②

Bypass Options ③

0 = None
1 = Manual HOA bypass
2 = Manual HOA bypass/isolation fusing
4 = Manual HOA bypass/isolation fusing/SPD
7 = Manual HOA bypass/SPD
H = Manual HOA RVSS bypass
J = Manual HOA RVSS bypass/isolation fusing
L = Manual HOA RVSS bypass/isolation fusing/SPD
P = Manual HOA RVSS bypass/SPD
• = Custom option ②

Output Power Options ④

0 = None
A = Output contactor
B = 3% Output reactor
D = dV/dt filter
E = 3% Output Reactor/output contactor
G = dV/dt/output contactor
• = Custom option ②

Control Options ⑤

0 = None
1 = Speed pot
2 = Start-stop pushbutton
3 = Start-stop pushbutton with speed pot
A = HOA switch
B = Start-stop pushbutton with speed pot & HOA switch
C = Start-stop pushbutton with HOA switch
D = HOA switch with speed pot
• = Custom option ②

Light Options ⑤

0 = None
1 = Non-bypass light kit—Power On, Run, Fault
2 = Bypass light kit—On, VFD Run, Fault, Bypass Run
• = Custom option ②

Enclosure Options

0 = None
1 = Floor stand—12 inches
2 = Floor stand—22 inches
A = Space heater
B = Space heater & 12-inch floor stands
C = Space heater & 22-inch floor stands
• = Custom option ②

Communication Options

0 = No option
1 = PROFIBUS-DP
3 = CANopen (slave)
4 = DeviceNet
5 = PROFIBUS-DP (D9 connector)
D = SmartWire-DT
• = Custom option ②

Option Boards 1

0 = No option
1 = 3 x DI, 3 x DO, 1 Thermistor, 24 Vdc/EXT
2 = 1 x AI, 2 x AO (isolated to control board)
3 = 3 x relay dry contact (2NO + 1NO/NC)
4 = 3 x PT100 RTD thermistor input
5 = 6 DI 240 Vac input
• = Custom option ②

Option Boards 2

Same options and codes as Option Boards 1

Notes

① HMCP disconnect option required and only available when bypass is selected.
② More options are available as Engineered to Order through the Bid Manager tool.
③ All bypass options include third contactor for drive isolation when in bypass mode.
④ Output contactor not available with bypass. Bypass comes standard with output contactor.
⑤ Pilot devices are 22 mm standard. 30 mm options are available as engineered to order through the Bid Manager tool.

Production Selection

EGF Enclosed Drive

480 V Drives—Constant Torque (CT)/High Overload (I_H) Enclosed Drives

hp	Current (A)	Drive Frame Size	NEMA Type 1 Base Catalog Number ①	NEMA Type 12 Base Catalog Number ①	NEMA Type 3R Base Catalog Number ①
7.5	11	2	**EGF0114D1**	**EGF0114D2**	**EGF0114D3**
10	14	2	**EGF0144D1**	**EGF0144D2**	**EGF0144D3**
15	21	2	**EGF0214D1**	**EGF0214D2**	**EGF0214D3**
20	27	3	**EGF0274D1**	**EGF0274D2**	**EGF0274D3**
25	34	3	**EGF0344D1**	**EGF0344D2**	**EGF0344D3**
30	40	3	**EGF0404D1**	**EGF0404D2**	**EGF0404D3**
40	52	4	**EGF0524C1**	**EGF0524C2**	**EGF0524C3**
50	65	4	**EGF0654C1**	**EGF0654C2**	**EGF0654C3**
60	77	4	**EGF0774C1**	**EGF0774C2**	**EGF0774C3**
75	96	5	**EGF0964C1**	**EGF0964C2**	**EGF0964C3**
100	124	5	**EGF1244C1**	**EGF1244C2**	**EGF1244C3**
125	156	5	**EGF1564C1**	**EGF1564C2**	**EGF1564C3**
150 ②	180	6	**EGF1804C1** ②	**EGF1804C2** ②	**EGF1804C3** ②
200 ②	240	6	**EGF2404C1** ②	**EGF2404C2** ②	**EGF2404C3** ②

EGF Enclosed Drive

480 V Drives—Variable Torque (VT)/Low Overload (I_L) Enclosed Drives

hp	Current (A)	Drive Frame Size	NEMA Type 1 Base Catalog Number ①	NEMA Type 12 Base Catalog Number ①	NEMA Type 3R Base Catalog Number ①
7.5	11	1	**EGF0114B1**	**EGF0114B2**	**EGF0114B3**
10	14	2	**EGF0144B1**	**EGF0144B2**	**EGF0144B3**
15	21	2	**EGF0214B1**	**EGF0214B2**	**EGF0214B3**
20	27	2	**EGF0274B1**	**EGF0274B2**	**EGF0274B3**
25	34	3	**EGF0344B1**	**EGF0344B2**	**EGF0344B3**
30	40	3	**EGF0404B1**	**EGF0404B2**	**EGF0404B3**
40	52	3	**EGF0524B1**	**EGF0524B2**	**EGF0524B3**
50	65	4	**EGF0654A1**	**EGF0654A2**	**EGF0654A3**
60	77	4	**EGF0774A1**	**EGF0774A2**	**EGF0774A3**
75	96	4	**EGF0964A1**	**EGF0964A2**	**EGF0964A3**
100	124	5	**EGF1244A1**	**EGF1244A2**	**EGF1244A3**
125	156	5	**EGF1564A1**	**EGF1564A2**	**EGF1564A3**
150	180	5	**EGF1804A1**	**EGF1804A2**	**EGF1804A3**
200 ②	240	6	**EGF2404A1** ②	**EGF2404A2** ②	**EGF2404A3** ②
250 ②	302	6	**EGF3024A1** ②	**EGF3024A2** ②	**EGF3024A3** ②

Notes

① Table is for base catalog number reference only. For complete catalog number selection, see **Page V6-T2-253**.

② Available in 2017.

Enclosure Selection

EGF Enclosed Drives

Enclosure selection charts are based on physical space limitations only and only to be used as a reference. For actual enclosure sizing, refer to Bid Manager.

Note: Filtered enclosure sizing includes dedicated space for passive filter, input fuses, circuit breaker or fusible disconnect, CPT, SPD, heater/thermostat, control relay and terminal blocks.

Note: Filtered bypass enclosure sizing includes dedicated space for a passive filter, input fuses, MCP, CPT, input contactor, output bypass contactors, overload relay, SPD, heater/thermostat, control relay and terminal blocks.

Filtered Enclosure X-Space

Enclosure Size	Frame 1	Frame 2	Frame 3	Frame 4	Frame 5
AX	—	—	—	—	—
BX	0	0	—	—	—
CX	3	3	2	2	—
DX	14	14	13	13	10

Filtered Bypass Enclosure X-Space

Enclosure Size	Frame 1	Frame 2	Frame 3	Frame 4	Frame 5
AX	—	—	—	—	—
BX	—	—	—	—	—
CX	2	1	0	—	—
DX	13	12	11	10	6

Filtered Power Options X-Space

Power Options	Frame 1	Frame 2	Frame 3	Frame 4	Frame 5
3% Output reactor	1	1	3	5	6
dV/dt filter	3	3	3	5	6
Output contactor	1	1	1	1	1

Filtered Bypass Power Options X-Space

Power Options	Frame 1	Frame 2	Frame 3	Frame 4	Frame 5
RVSS Bypass	1	1	3	5	6
3% Output reactor	2	2	2	3	4
dV/dt filter	3	3	3	5	6

Accessories

The PowerXL Series—DG1 drives can accommodate a wide selection of expander and adapter option boards to customize the drive for your application needs. The drive's control unit is designed to accept a total of two additional option boards.

The PowerXL Series—DG1 drives come with a factory-installed standard board configuration including the following:

- Standard I/O:
  - 8DI, 1DO
  - 2AI, 2AO
  - 2FC, 1FA relays
- Standard communications:
  - EtherNet/IP, Modbus TCP
  - RS-485: Modbus RTU, BACnet MS/TP

PowerXL Series—DG1 I/O Card Kits

Description	Catalog Number
3 x DI, 3 x DO, 1 x thermistor, 24 Vdc/EXT option card	**DXG-EXT-3DI3DO1T**
1 x AI, 2 x AO (isolated to control board) option card	**DXG-EXT-1AI2AO**
3 x relay dry contact (2NO + 1NO/NC) option card	**DXG-EXT-3RO**
3 x PT100 RTD thermistor input option card	**DXG-EXT-THER1**
6 x DI 240 Vac input option card	**DXG-EXT-6DI**

PowerXL Series—DG1 Communication Card Kits

Description	Catalog Number
PROFIBUS-DP communication card	**DXG-NET-PROFB**
CANopen communication card	**DXG-NET-CANOPEN**
DeviceNet communication card	**DXG-NET-DEVICENET**
PROFIBUS DB9 to 5-pin adapter card	**DXG-NET-PROAD**
SmartWire communication card and module	**DXG-NET-SWD** ①

Note

① Available January 2017.

Options

Input Power Options

Option	Description
HMCP Disconnect	The HMCP motor protection circuit breaker uses an electronic trip unit to provide typical motor overload relay functionality and short-circuit protection against potential phase-to-phase or phase-to-ground faults.
Circuit Breaker	Utilizes a circuit breaker to provide a means of short-circuit protection for the power cables between it and the drive, and protection from high-level ground faults on the power cable. Allows a convenient means of disconnecting the drive from the line, and the operating mechanism can be padlocked in the OFF position. This is factory mounted in the enclosure.
Isolation Fusing	Provides high-level fault protection of the drive input power circuit from the load side of the fuses to the input side of the power transistors. This option consists of three 200 kA fuses that are factory mounted in the enclosure.
3% Input Reactor	The input reactor is a three-phase series inductance on the line side of an AFD. It is used to provide a reduction in voltage and current harmonics. It also provides increased input protection for AFD and its semiconductors from line transients.
SPD	Provides a UL 1449 surge protection device (SPD) rated for 40 kA/ph that is connected to the line side terminals.
Fused Disconnect	Utilizes fusing to provide a means of short-circuit protection for the power cables between it and the drive, and protection from high-level ground faults on the power cable. Allows a convenient means of disconnecting the drive from the line, and the operating mechanism can be padlocked in the OFF position. This is factory mounted in the enclosure.

Bypass Options

Option	Description
Manual HOA Bypass	Provides a three-position selector switch that allows the user to select either a HAND or AUTO mode of operation. HAND mode is defaulted keypad operation, and AUTO mode is defaulted to control from an external terminal source. These modes of operation can be configured via programming to allow for alternate combinations of start and speed sources. Start and speed sources include keypad, I/O and fieldbus.
Manual HOA RVSS Bypass	This option adds a reduced voltage soft starter to bypass assembly for soft starting in bypass mode.

Output Power Options

Option	Description
Output Contactor	Provides a means for positive disconnection of the drive output from the motor terminals. The contactor coil is controlled by the drive's run or permissive logic. NC and NO auxiliary contacts rated at 10 A, 600 Vac are provided for customer use. This option includes a low VA 115 Vac fused control power transformer and is factory mounted in the enclosure.
3% Output Reactor	The output reactor is a three-phase series inductance on the load side of a VFD. It is used to reduce transient voltage (dv/dt) and peak voltages at the motor terminals. A 3% output filter is recommended for motor cable lengths up to 300 ft (10 m).
dV/dt Filter	Used to reduce the transient voltage (dV/dt) at the motor terminals. Recommended for motor cable lengths over 300 ft (10 m) and up to 1000 ft (304.8 m). This option is mounted in the enclosure.

Control Options

Option	Description
Speed Pot	Provides the ability to adjust the frequency reference using a door-mounted potentiometer. This option uses the 10 Vdc reference to generate a 0–10 V signal at the analog voltage input signal terminal. When the HOA bypass option is added, the speed is controlled when the HOA switch is in the HAND position. Without the HOA bypass option, a two-position switch (labeled local/remote) is provided on the keypad to select speed reference from the speed potentiometer or a remote speed signal.
HOA Switch	Provides a three-position selector switch that allows the user to select either a HAND or AUTO mode of operation. HAND mode is defaulted to keypad operation, and AUTO mode is defaulted to control from an external terminal source. These modes of operation can be configured via drive programming to allow for alternate combinations of start and speed sources. Start and speed sources include Keypad, I/O and fieldbus.
Start-Stop Pushbutton	Provides door-mounted START and STOP pushbuttons for either bypass or non-bypass configurations.

Light Options

Option	Description
Non-Bypass Light Kit—Power On, Run, Fault	Provides a white POWER ON light that indicates power to the enclosed cabinet, a green RUN light that indicates the drive is running and a red FAULT light that indicates a drive fault has occurred.
Bypass Light Kit—On, VFD Run, Fault, Bypass Run	Provides a white POWER ON light that indicates power to the enclosed cabinet, a green RUN light that indicates the drive is running, a red FAULT light that indicates a drive fault has occurred and an amber light that indicates when the motor is running in Bypass mode.

Enclosure Options

Option	Description
Floor Stand 12 in	Converts a normally wall-mounted enclosure to a floor-standing enclosure with a height of 12 in (304.8 mm).
Floor Stand 22 in	Converts a normally wall-mounted enclosure to a floor-standing enclosure with a height of 22 in (558.8 mm).

Technical Data and Specifications

PowerXL Series—DG1 Technical Data and Specifications

Attribute	Description	Specification
Input ratings	Input voltage U_{in}	208 V, 230 V, 480 V, 575 V, –15 to 10%
	Input frequency	50 Hz to 60 Hz (variation up to 45 Hz to 66 Hz)
	Connection to power	Once per minute or less
	Starting delay	3 s (FR1 to FR2), 4 s (FR3), 5 s (FR4), 6 s (FR5 and FR6)
	Short-circuit withstand rating	100 kAIC (fuses and circuit breakers)
Output ratings	Output voltage	0 to U_{in}
	Output current	I_L: ambient temperature maximum 40 °C, up to 60 °C with derating, overload 1.1 x I_L (1 min./10 min.) I_H: ambient temperature maximum 50 °C, up to 60 °C with derating, overload 1.5 x I_H (1 min./10 min.)
	Initial output current	200% (2 s / 20 s)
	Output frequency	0–400 Hz (standard)
	Frequency resolution	0.01 Hz
Control characteristics	Control methods	Frequency control Speed control Open-loop speed control Open-loop torque control
	Switching frequency	230 V / 480 V range: FR1–3: 1 kHz to 12 kHz FR4–6: 1 kHz to 10 kHz 230 V / 480 V defaults: FR1–3: 4 kHz FR4–5: 3.6 kHz FR6: 2 kHz 575 V range: FR1–6: 1 kHz to 6 kHz 575 V defaults: FR1–4: 3 kHz FR5–6: 2 kHz Automatic switching frequency derating in case of overload.
	Frequency reference	Analog input: resolution 0.1% (10-bit), accuracy +1% Analog output: resolution 0.1% (10-bit), accuracy +1% Panel reference: resolution 0.01 Hz
	Field weakening point	20 Hz to 400 Hz
	Acceleration time	0.1 s to 3000 s
	Deceleration time	0.1 s to 3000 s
	Braking torque	DC brake: 30% x Motor Rated Torque (Tn) (without brake chopper) Dynamic braking (with optional brake chopper using an external brake resistor): 100% continuous maximum rating
Ambient conditions	Ambient operating temperature	–10 °C (no frost) to +40 °C
	Storage temperature	–40 °C to +70 °C
	Relative humidity	0–95% RH, noncondensing, non-corrosive
	Air quality: • Chemical vapors • Mechanical particles	Tested according to IEC 60068-2-60 Test Key: Flowing mixed gas corrosion test, Method 1 (H2S [hydrogen sulfide] and SO2 [sulfur dioxide]) Designed according to: IEC 60721-3-3, unit in operation, class 3C2 IEC 60721-3-3, unit in operation, class 3S2
	Altitude	100% load capacity (no derating) up to 3280 ft (1000 m); 1% derating for each 328 ft (100 m) above 3280 ft (1000 m); max. 9842 ft (3000 m) (2000 m for corner grounded earth main systems) For 575 V product, maximum altitude is 6561 ft (2000 m) regardless of main system

PowerXL Series—DG1 Technical Data and Specifications, continued

Attribute	Description	Specification
Ambient conditions, continued	Overvoltage	Overvoltage Category III
	Pollution degree	Pollution Degree 2
	Enclosure class	NEMA Type 1, 12, 3R
	Immunity	Fulfills EN 61800-3 (2004), first and second environment
Standards	Safety	UL 508C, EN 61800-5-1
	Approvals	UL and cUL
Fieldbus connections		Onboard: EtherNet/IP, Modbus® TCP, Modbus RTU, BACnet
Safety/protections	Overvoltage protection	Yes
	Overvoltage trip limit	230 V drives: 456 V 480 V drives: 911 V 575 V drives: 1100 V
	Undervoltage protection	Yes
	Undervoltage trip limit	230 V drives: 211 V 480 V drives: 370 V 575 V drives: 550 V
	Earth fault protection	Yes Default: 15% motor FLA Minimum: 0% motor FLA Maximum: 30% motor FLA
	Input phase supervision	Yes
	Motor phase supervision	Yes
	Overcurrent protection	Yes
	Unit overtemperature protection	Yes
	Motor overload protection	Yes
	Motor stall protection	Yes
	Motor underload protection	Yes
	DC bus overvoltage control	Yes
	Short-circuit protection of 24 V reference voltages	Yes
	Surge protection	Yes (differential mode 2 kV; common mode 4 kV 230 V drives: 275 Vac, 10,000 A 480 V drives: 320 Vac, 8000 A 575 V drives: 385 Vac, 10,000 A
	Common coated boards	Yes (prevents corrosion)
Efficiency	Drive efficiency ratings ①	480 V: FR1 = 97.7% FR2 = 97.9% FR3 = 97.7% FR4 = 98.0% FR5 = 98.2% 230 V: FR1 = 96.7% FR2 = 97.4% FR3 = 97.2% FR4 = 97.4% FR5 = 97.7%

Note

① Based on DG1 efficiency ratings in an enclosure with no options.

Wiring Diagram

PowerXL Series—DG1 Control Wiring Diagram

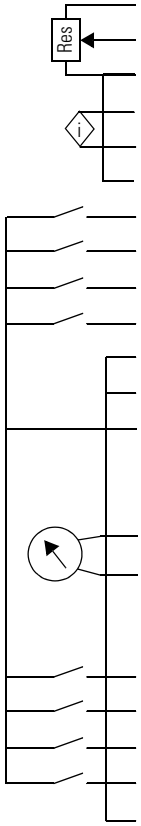

Pin	Signal Name	Signal	Default Setting	Description
1	+10 V	Ref. Output Voltage	—	10 Vdc Supply Source
2	AI1+	Analog Input 1	0–10 V	Voltage Speed Reference (Programmable to 4 mA to 20 mA)
3	AI1–	Analog Input 1 Ground	—	Analog Input 1 Common (Ground)
4	AI2+	Analog Input 2	4 mA to 20 mA	Current Speed Reference (Programmable to 0–10 V)
5	AI2–	Analog Input 2 Ground	—	Analog Input 2 Common (Ground)
6	GND	I/O Signal Ground	—	I/O Ground for Reference and Control
7	DIN5	Digital Input 5	Preset Speed B0	Sets frequency output to Preset Speed 1
8	DIN6	Digital Input 6	Preset Speed B1	Sets frequency output to Preset Speed 2
9	DIN7	Digital Input 7	Emergency Stop (TI–)	Input forces VFD output to shut off
10	DIN8	Digital Input 8	Force Remote (TI+)	Input takes VFD from Local to Remote
11	CMB	DI5 to DI8 Common	Grounded	Allows source input
12	GND	I/O Signal Ground	—	I/O Ground for Reference and Control
13	24 V	+24 Vdc Output	—	Control voltage output (100 mA max.)
14	DO1	Digital Output 1	Ready	Shows the drive is ready to run
15	24 Vo	+24 Vdc Output	—	Control voltage output (100 mA max.)
16	GND	I/O Signal Ground	—	I/O Ground for Reference and Control
17	AO1+	Analog Output 1	Output Frequency	Shows Output frequency to motor 0–60 Hz (4 mA to 20 mA)
18	AO2+	Analog Output 2	Motor Current	Shows Motor current of motor 0–FLA (4 mA to 20 mA)
19	24 Vi	+24 Vdc Input	—	External control voltage input
20	DIN1	Digital Input 1	Run Forward	Input starts drive in forward direction (start enable)
21	DIN2	Digital Input 2	Run Reverse	Input starts drive in reverse direction (start enable)
22	DIN3	Digital Input 3	External Fault	Input causes drive to fault
23	DIN4	Digital Input 4	Fault Reset	Input resets active faults
24	CMA	DI1 to DI4 Common	Grounded	Allows source input
25	A	RS-485 Signal A	—	Fieldbus Communication (Modbus, BACnet)
26	B	RS-485 Signal B	—	Fieldbus Communication (Modbus, BACnet)
27	R3NO	Relay 3 Normally Open	At Speed	Relay output 3 shows VFD is at Ref. Frequency
28	R1NC	Relay 1 Normally Closed	Run	Relay output 1 shows VFD is in a run state
29	R1CM	Relay 1 Common		
30	R1NO	Relay 1 Normally Open		
31	R3CM	Relay 3 Common	At Speed	Relay output 3 shows VFD is at Ref. Frequency
32	R2NC	Relay 2 Normally Closed	Fault	Relay output 2 shows VFD is in a fault state
33	R2CM	Relay 2 Common		
34	R2NO	Relay 2 Normally Open		

Dimensions

Approximate Dimensions in Inches (mm)

BX Box Type 1

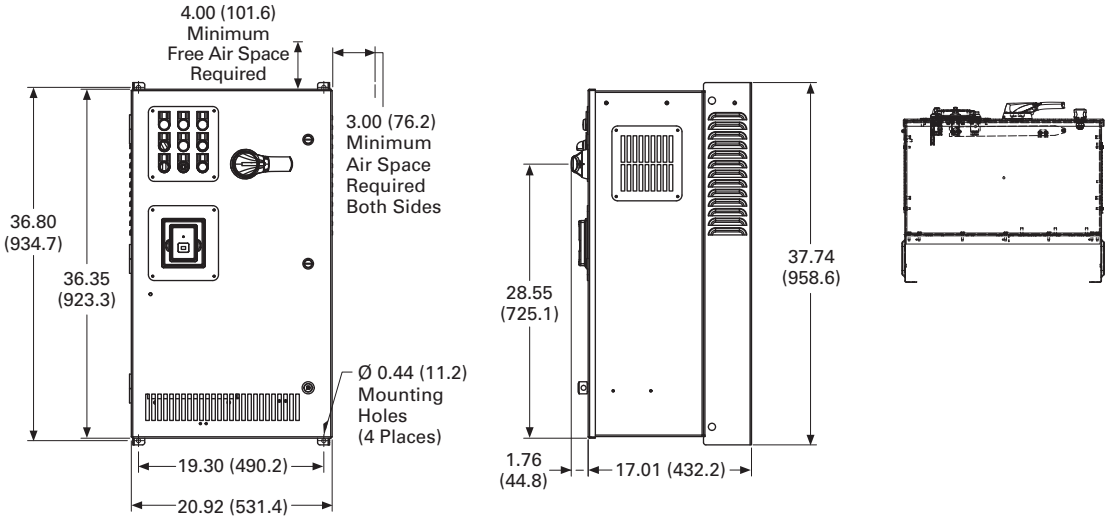

BX Box Type 1—12 Inch Floor Stands

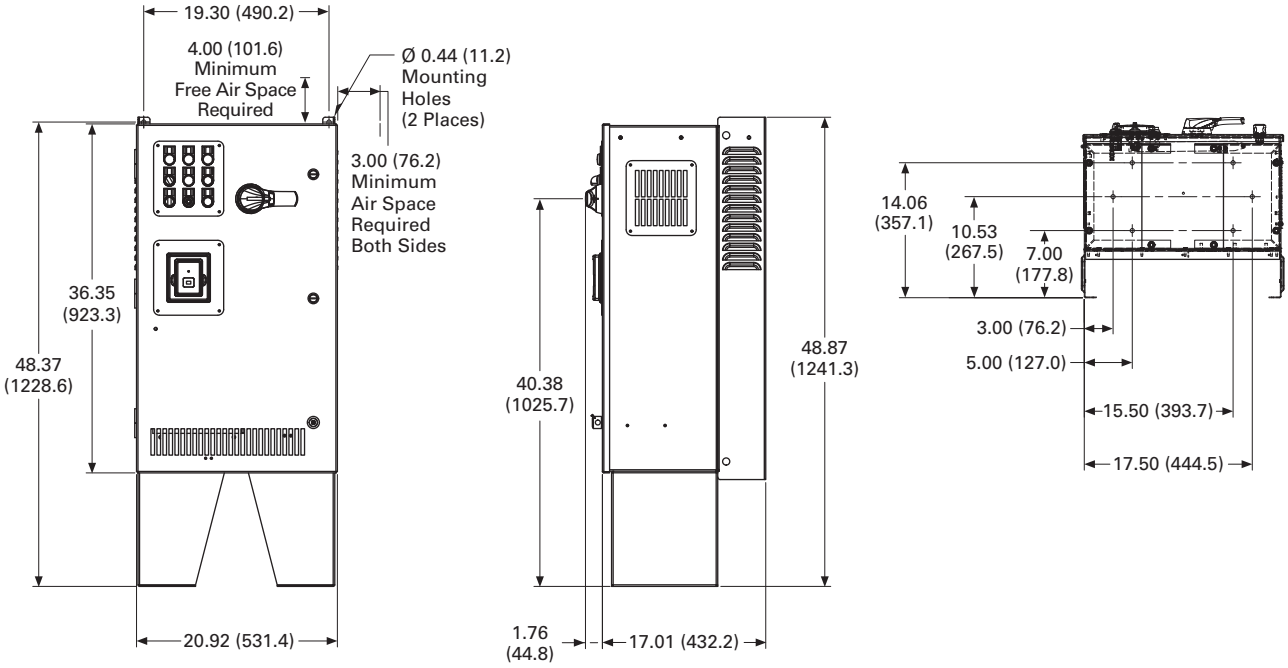

Approximate Dimensions in Inches (mm)

BX Box Type 1—22 Inch Floor Stands

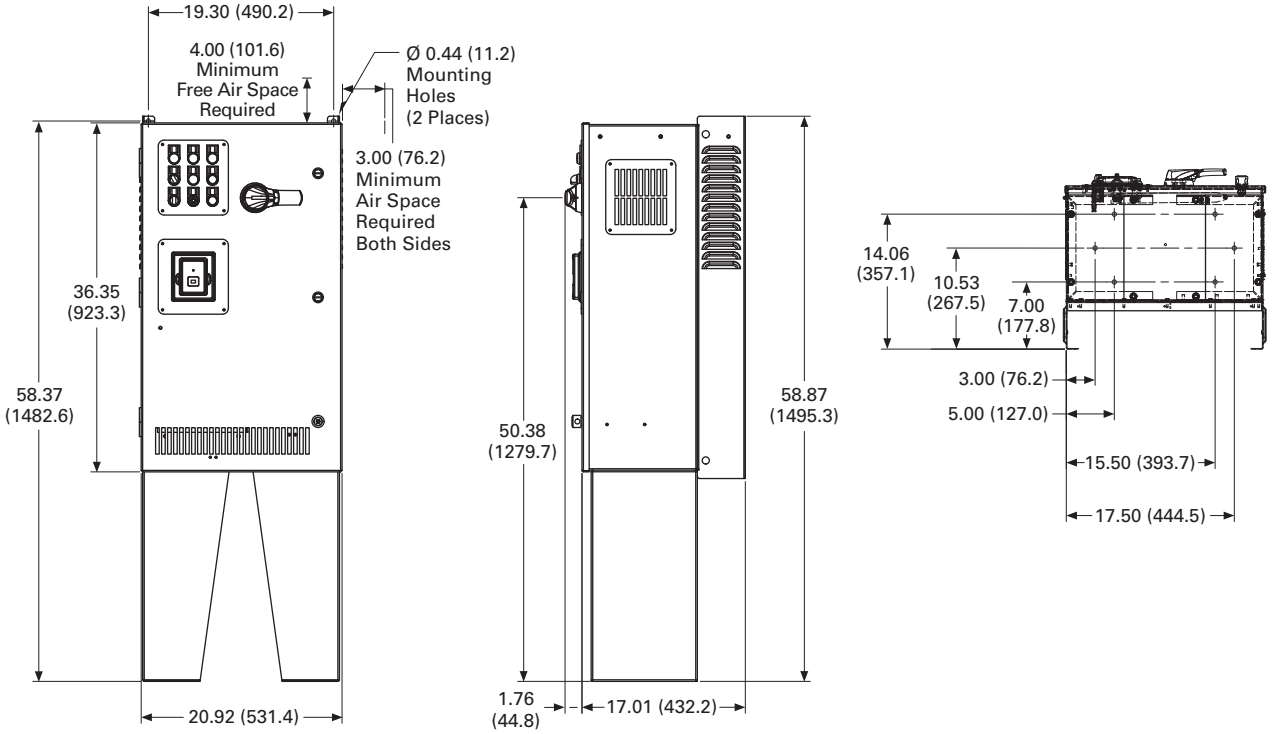

BX Box Type 12

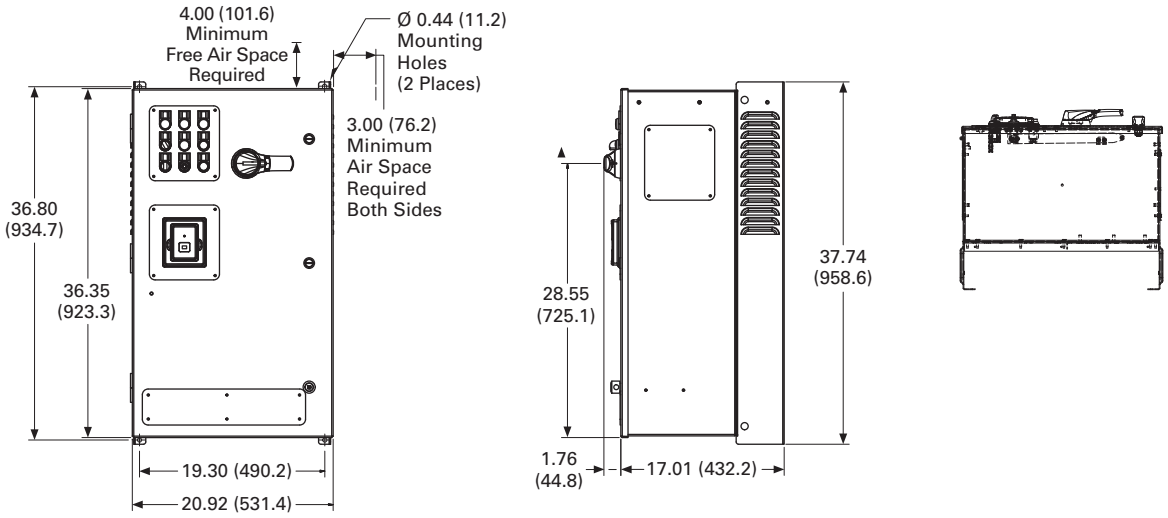

Approximate Dimensions in Inches (mm)

BX Box Type 12—12 Inch Floor Stands

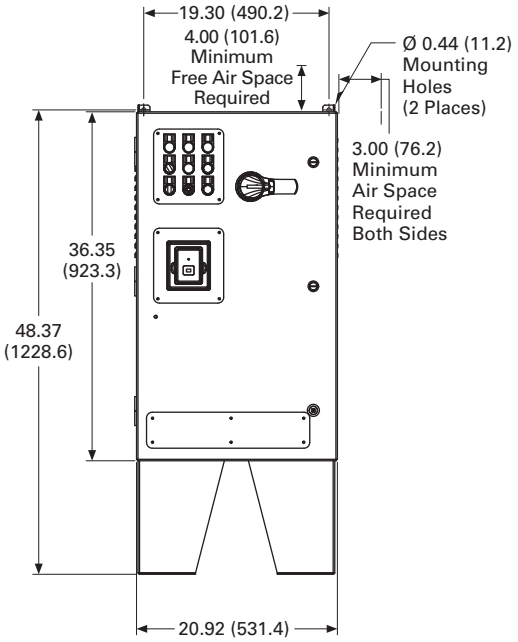

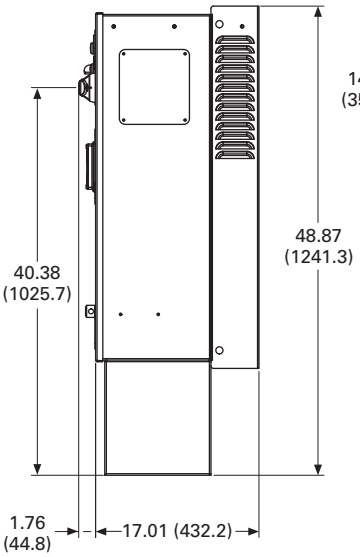

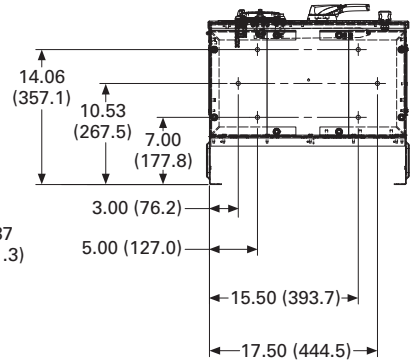

BX Box Type 12—22 Inch Floor Stands

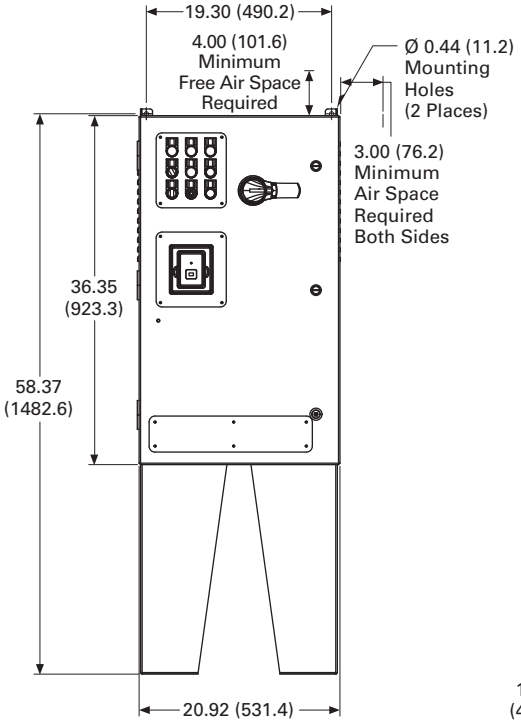

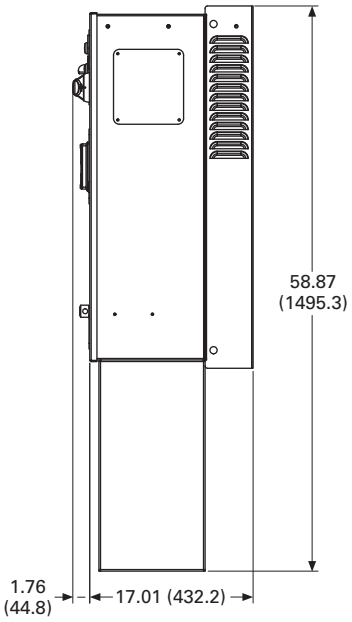

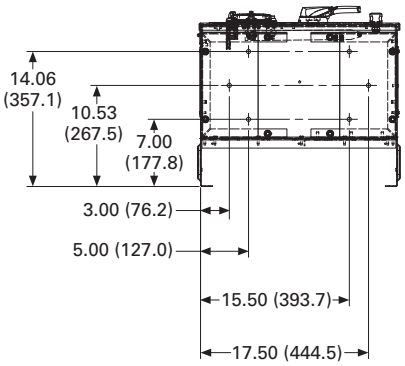

Approximate Dimensions in Inches (mm)

BX Box Type 3R

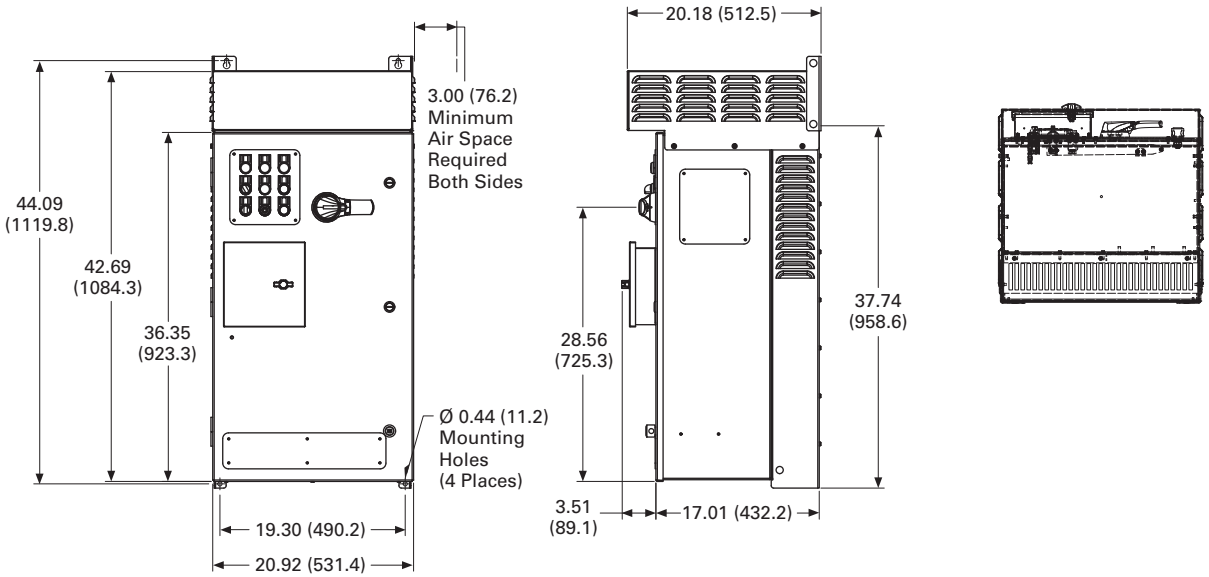

BX Box Type 3R—12 Inch Floor Stands

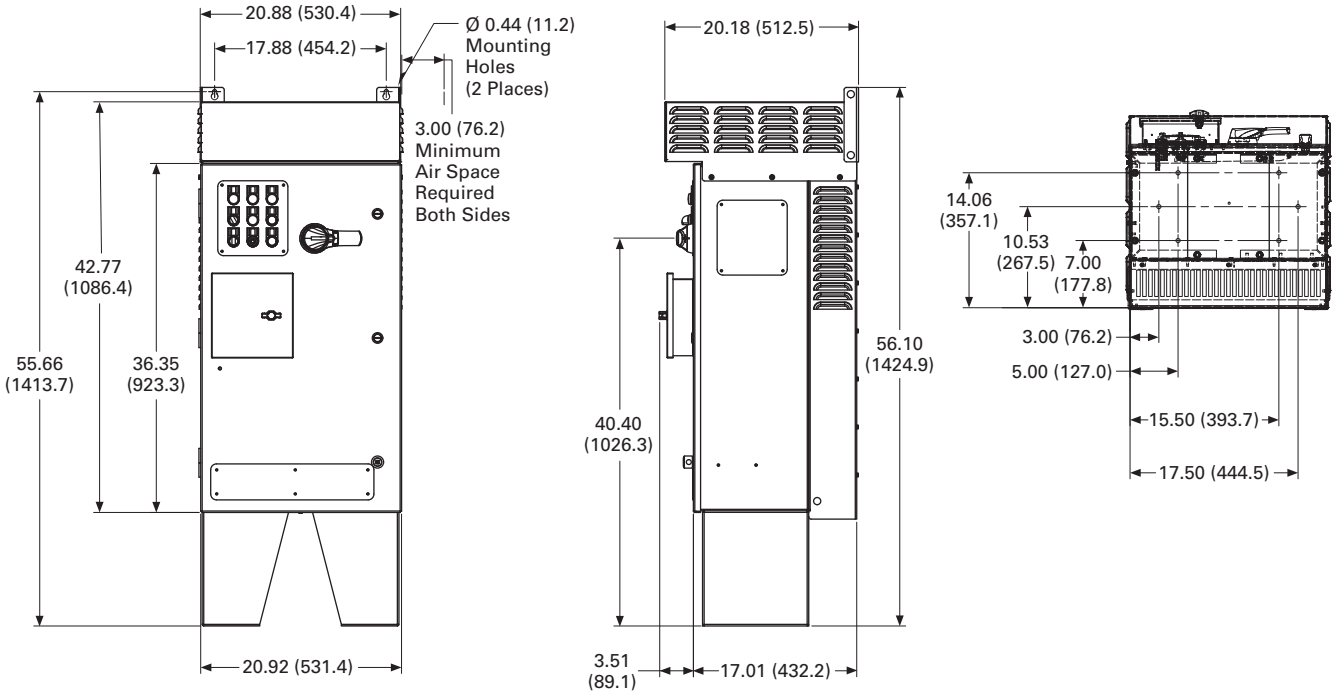

Approximate Dimensions in Inches (mm)

BX Box Type 3R—22 Inch Floor Stands

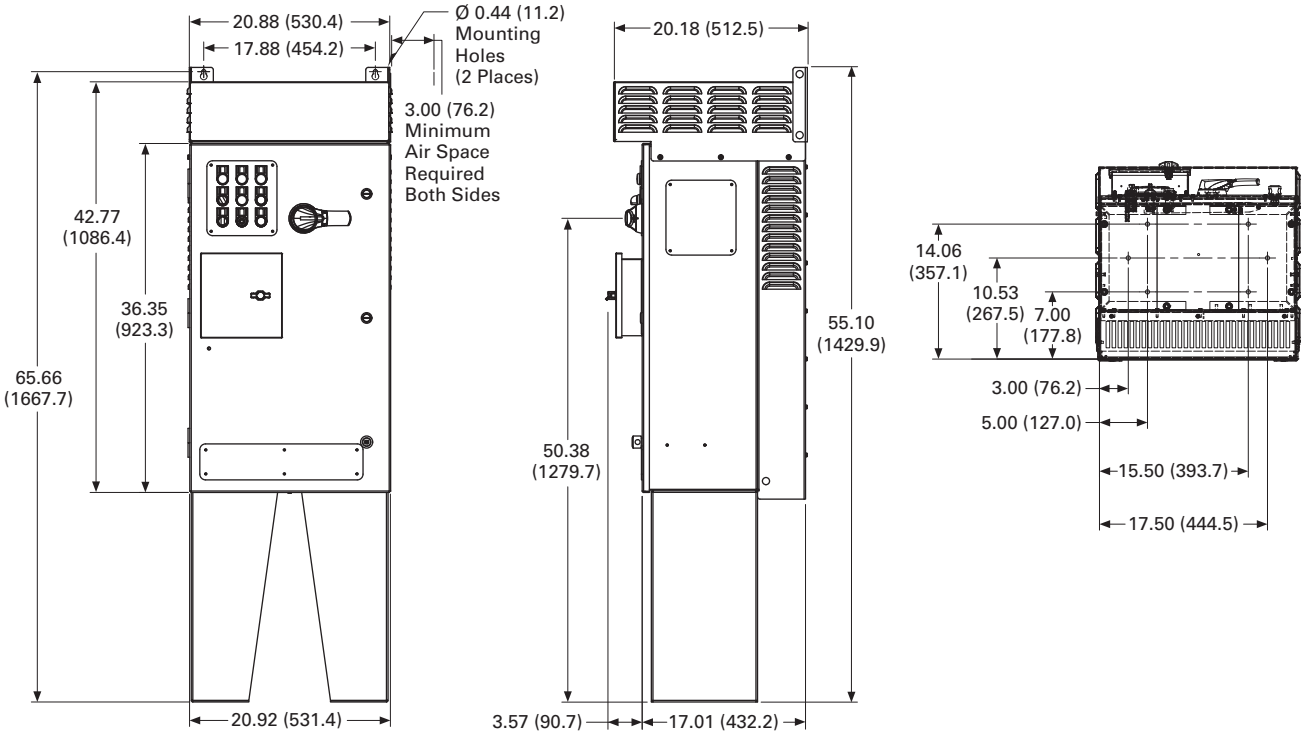

CX Box Type 1

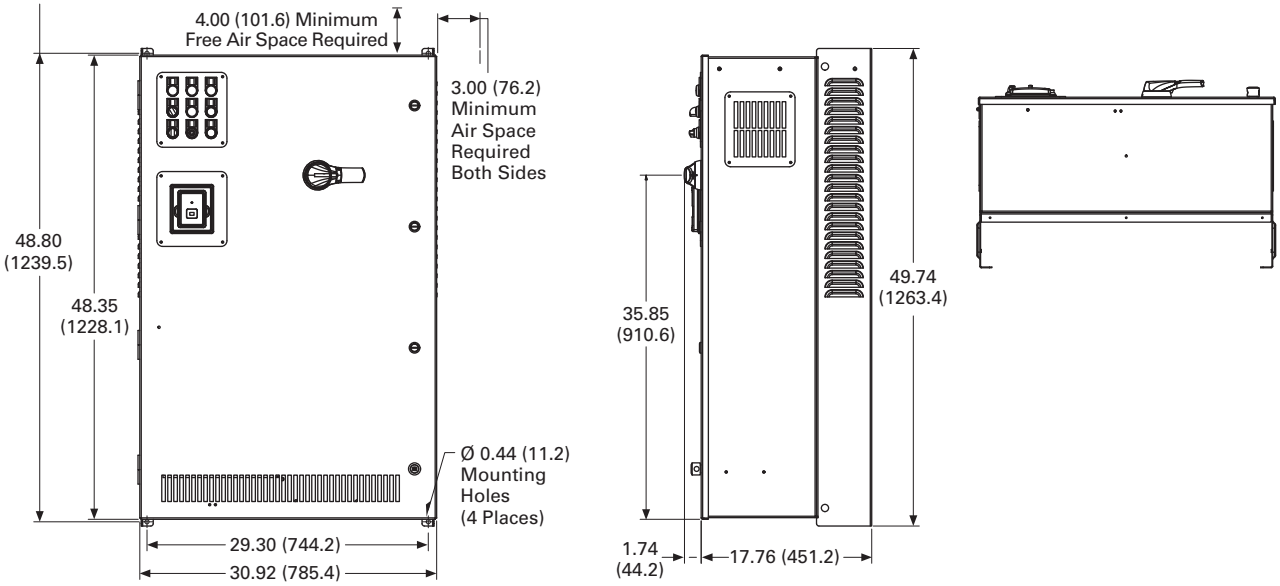

Approximate Dimensions in Inches (mm)

CX Box Type 1—12 Inch Floor Stands

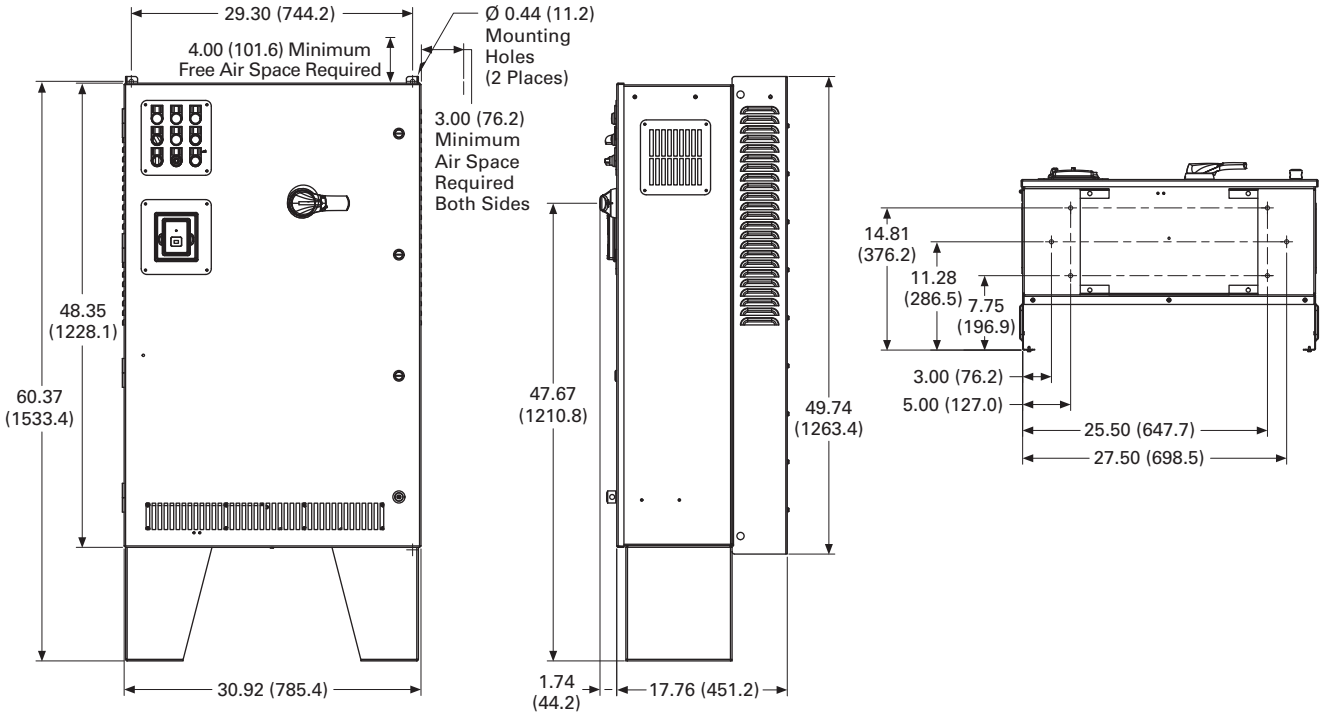

CX Box Type 1—22 Inch Floor Stands

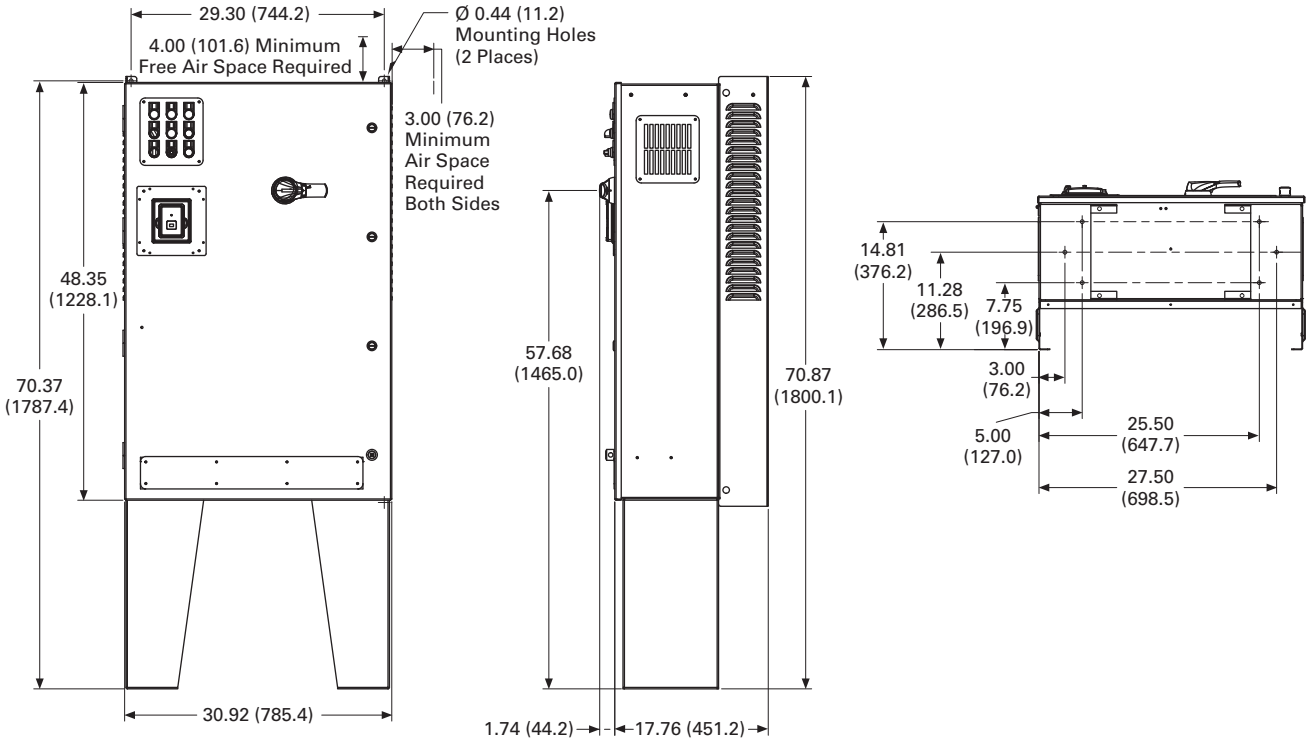

Approximate Dimensions in Inches (mm)

CX Box Type 12

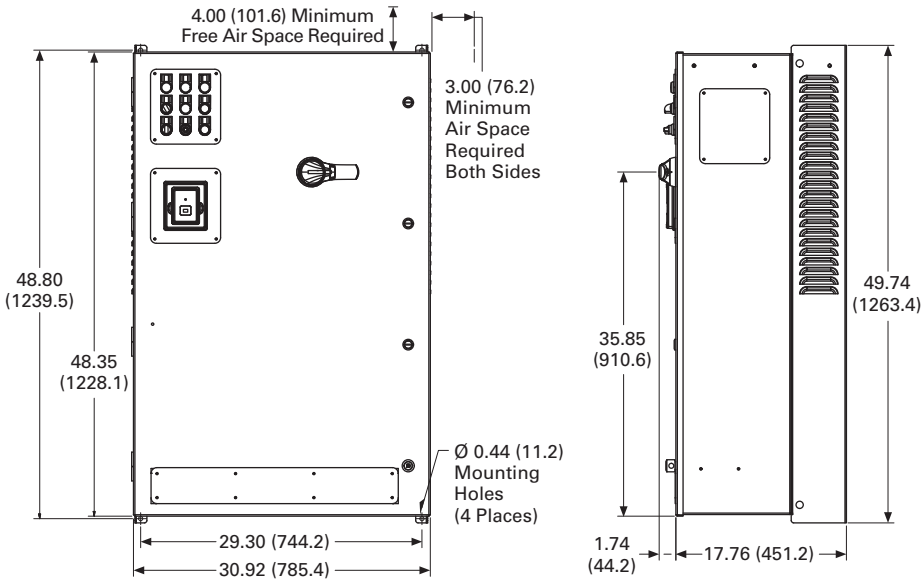

CX Box Type 12—12 Inch Floor Stands

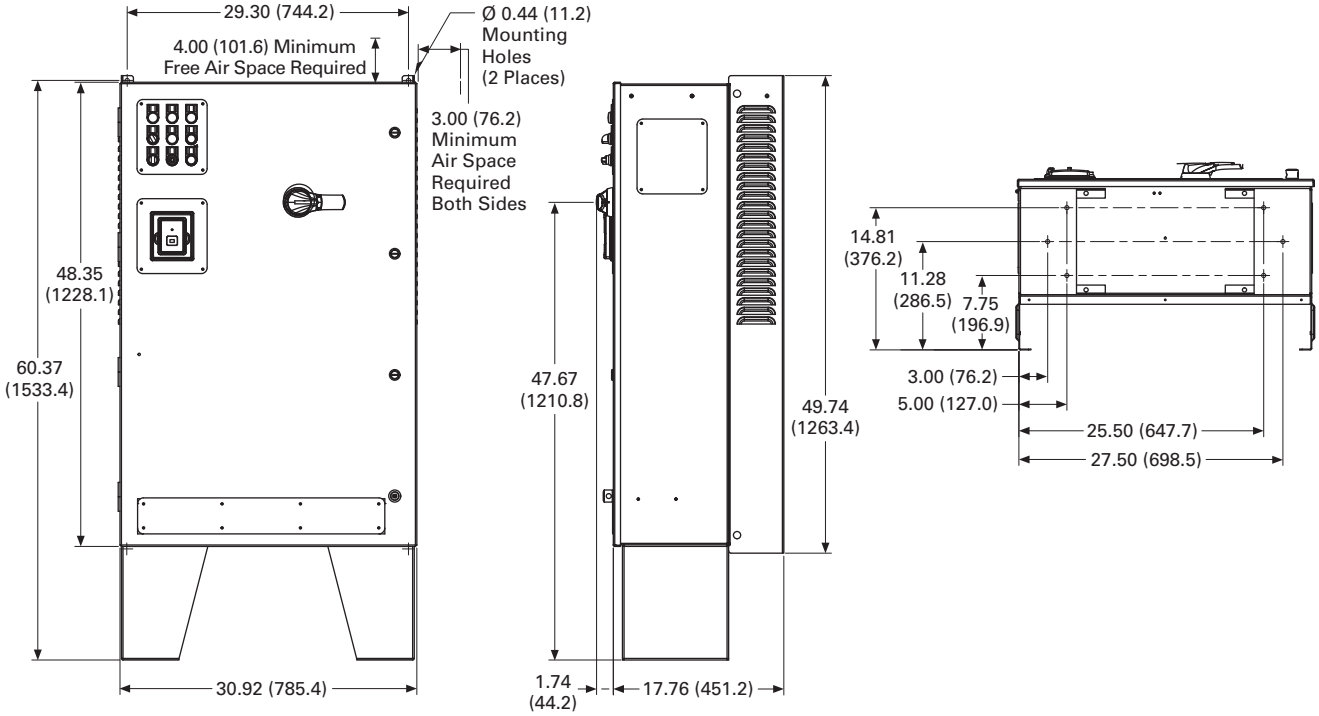

Approximate Dimensions in Inches (mm)

CX Box Type 12—22 Inch Floor Stands

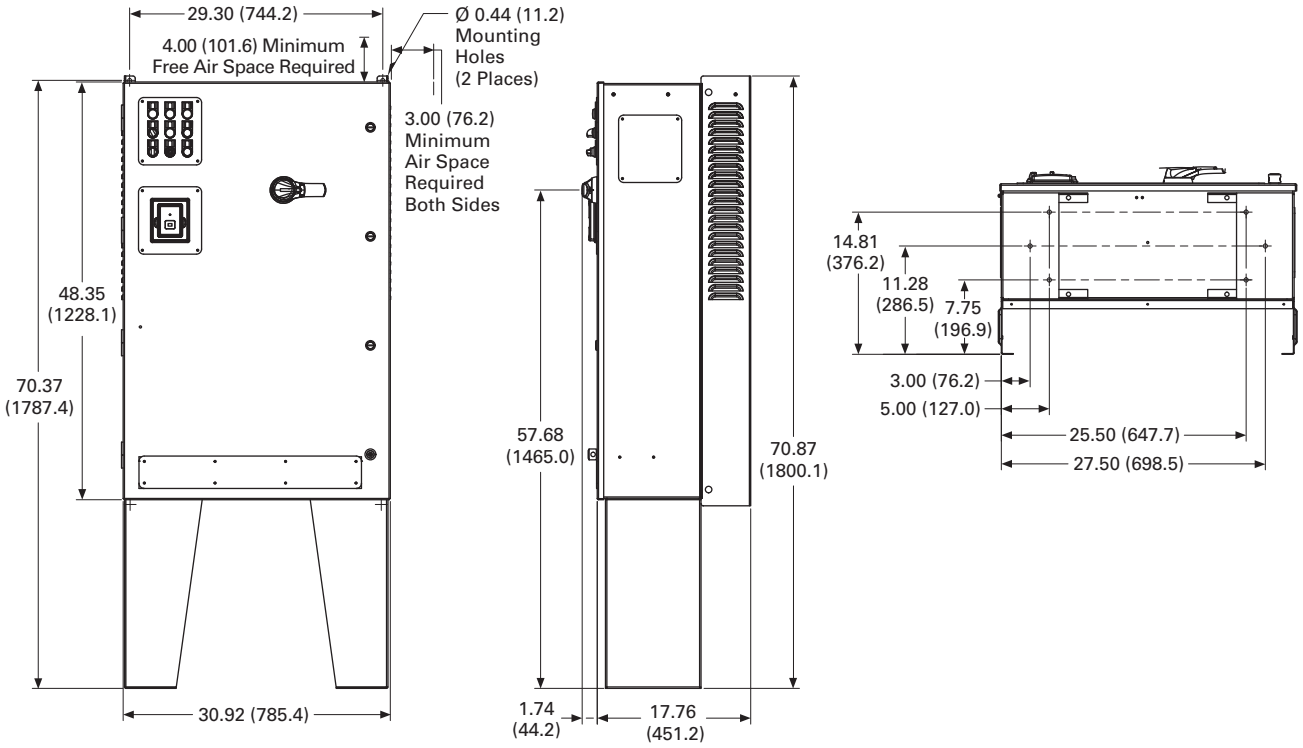

CX Box Type 3R

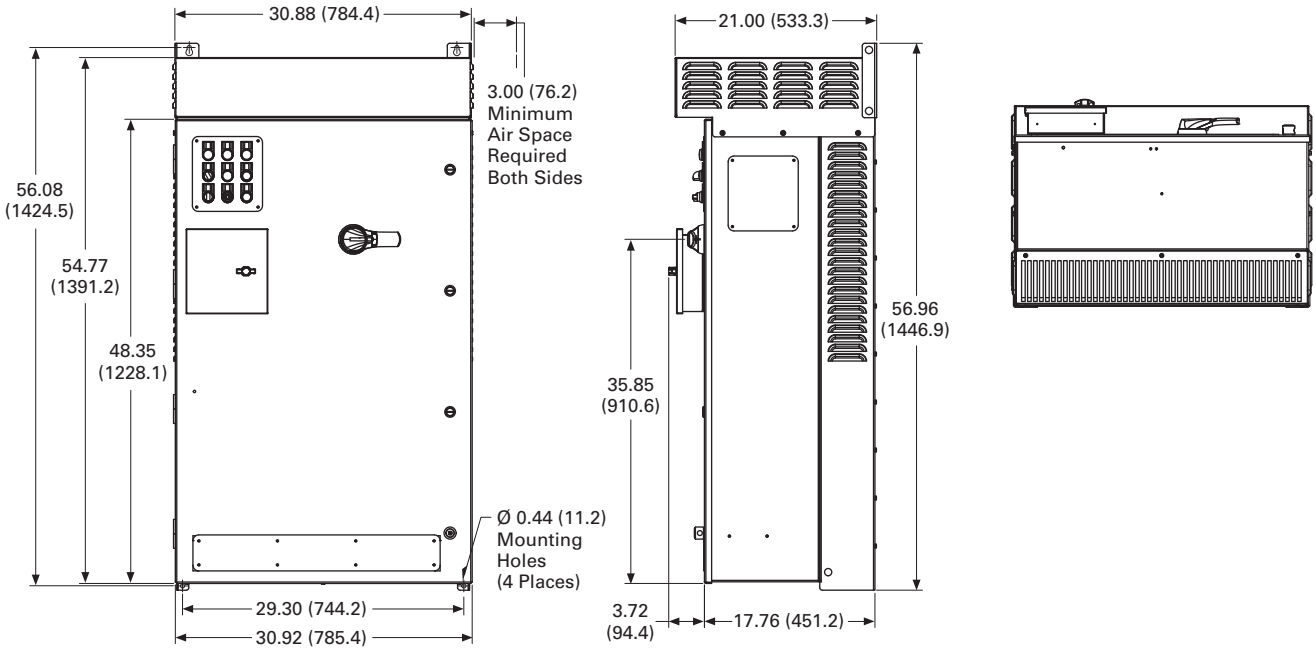

Approximate Dimensions in Inches (mm)

CX Box Type 3R—12 Inch Floor Stands

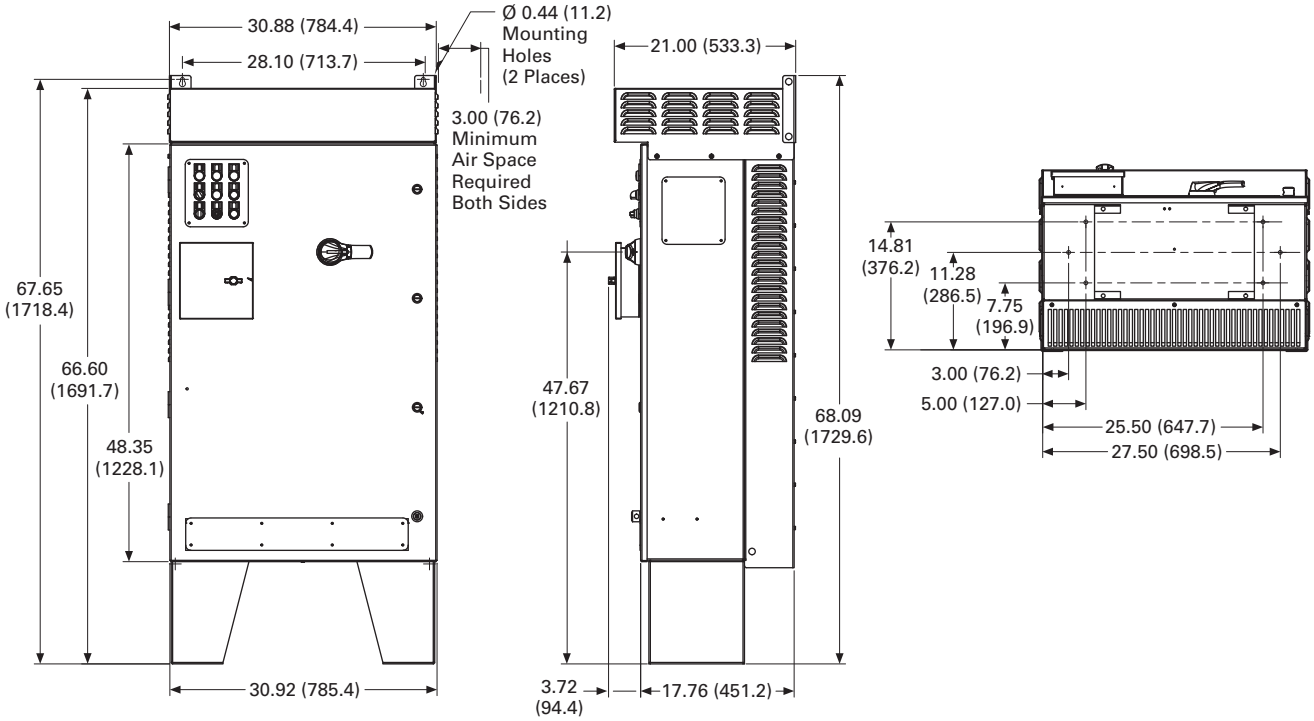

CX Box Type 3R—22 Inch Floor Stands

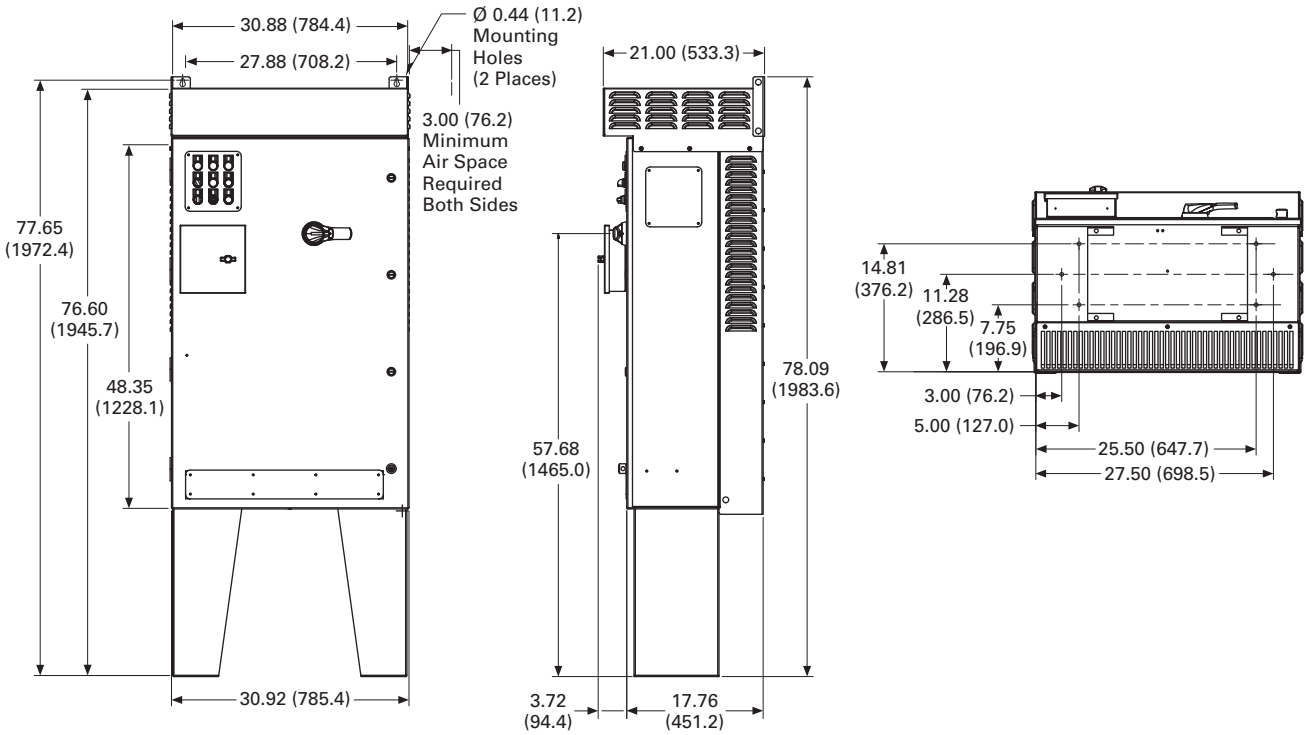

Approximate Dimensions in Inches (mm)

DX Box Type 1

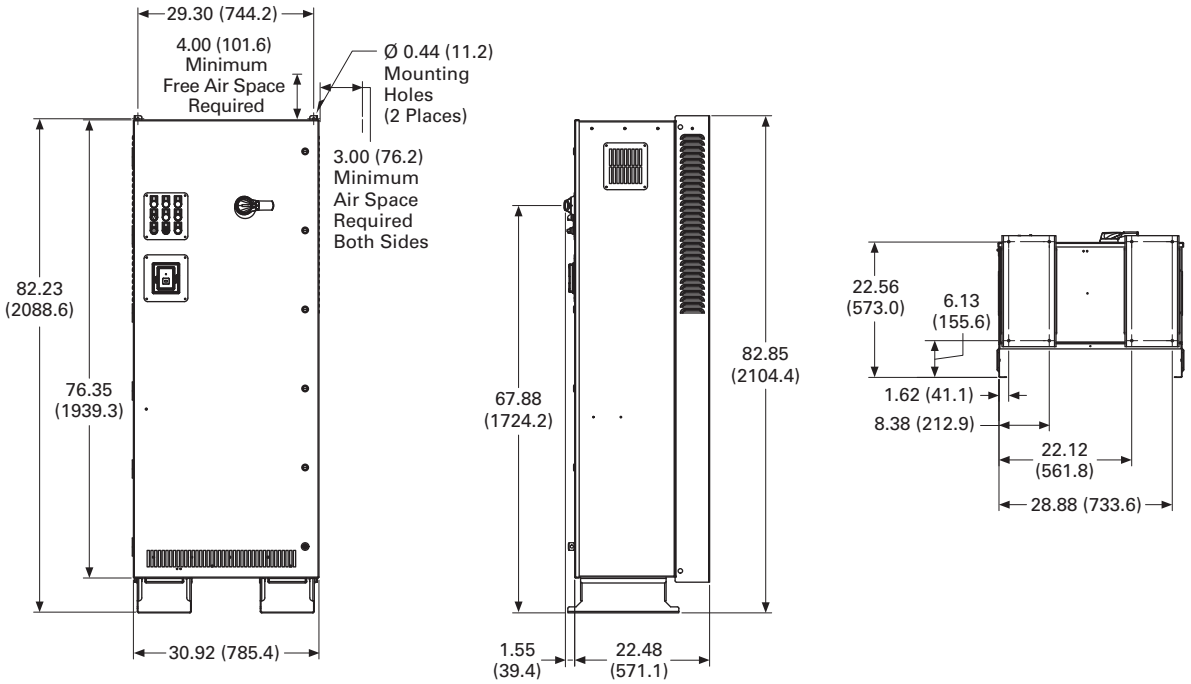

DX Box Type 12

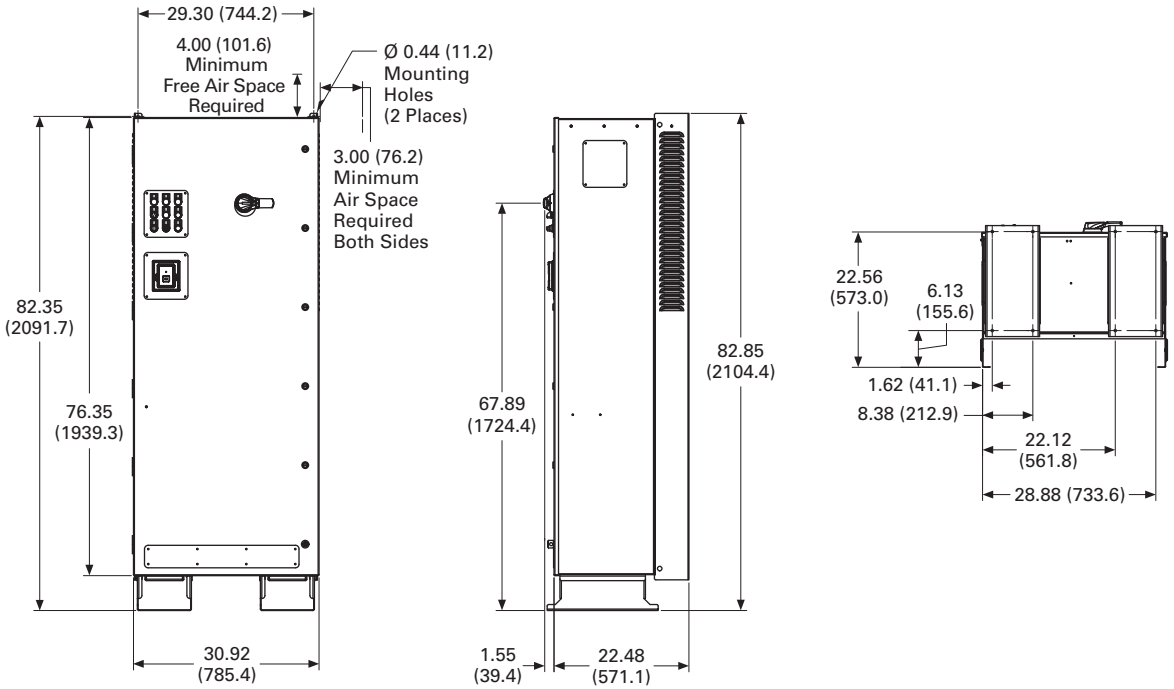

Approximate Dimensions in Inches (mm)

DX Box Type 3R

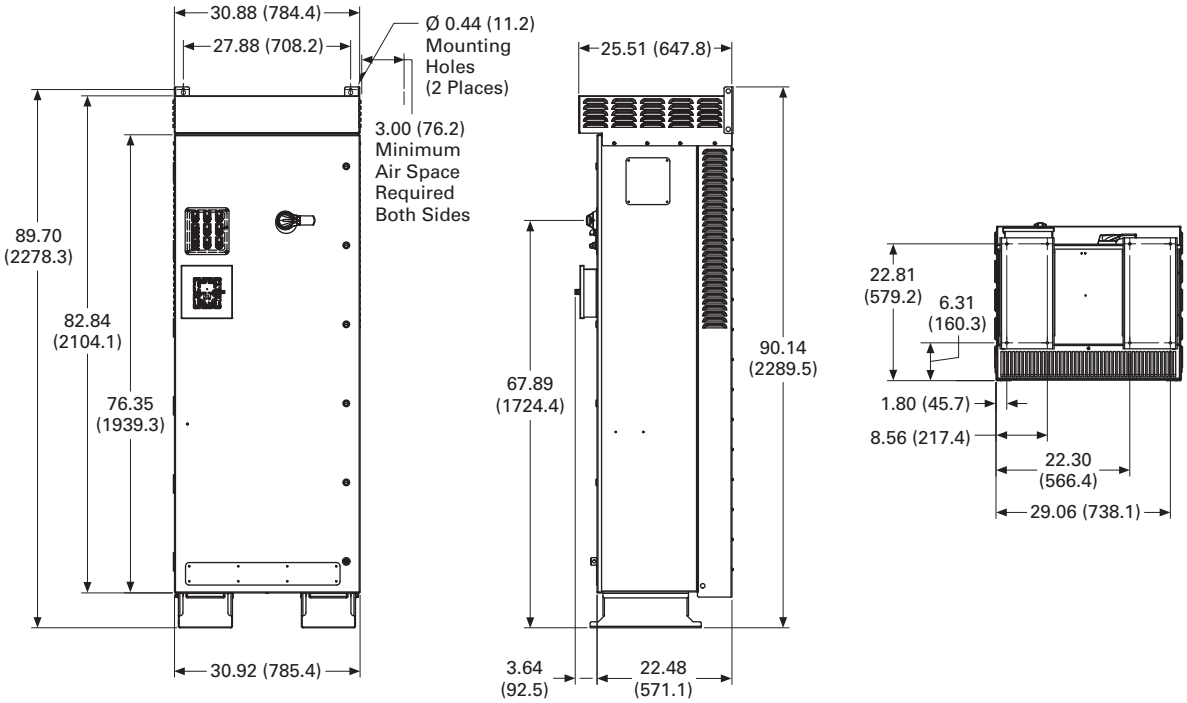

CFX Enclosed Drives

Contents

Description	*Page*
Clean Power Drives Overview	**V6-T2-245**
Enclosed Passive Filtered Drives	
EGF Enclosed Drives	**V6-T2-252**
CFX Enclosed Drives	
Product Identification	**V6-T2-273**
Catalog Number Selection	**V6-T2-274**
Product Selection	**V6-T2-276**
Enclosure Selection	**V6-T2-279**
Options	**V6-T2-280**
Technical Data and Specifications	**V6-T2-281**
Wiring Diagram	**V6-T2-283**
Dimensions	**V6-T2-284**
Enclosed 12-Pulse Drives	**V6-T2-298**
Enclosed 18-Pulse Drives	**V6-T2-302**
Enclosed Regenerative Drives	**V6-T2-326**

CFX Enclosed Drives

Product Description

The enclosed passive filtered drive also delivers True Power Factor—in addition to reducing harmonic distortion, the enclosed passive filtered drive prevents transformer overheating and overloading of breakers and feeders, which enables the application of adjustable frequency drives on generators and other high impedance power systems.

Features and Benefits

The CFX passive filtered drive features include (at 480 V):

- UL Type 1, UL Type 12, UL Type 3R and NEMA 1 with gaskets and filters
- Input voltage: 480 V
- Complete range of control, network and power options
- Horsepower range:
  - 480 V, 7-1/2–400 hp I_L
- Single enclosure for both drive and filter reduces field wiring and enables convenient bypass installation
- Packaged solution ensures optimal coordination of drive and filter

Standards and Certifications

- UL
- cUL
- 508C

Product Identification

Enclosed Passive Filtered Drive—UL Type 12, 40 hp

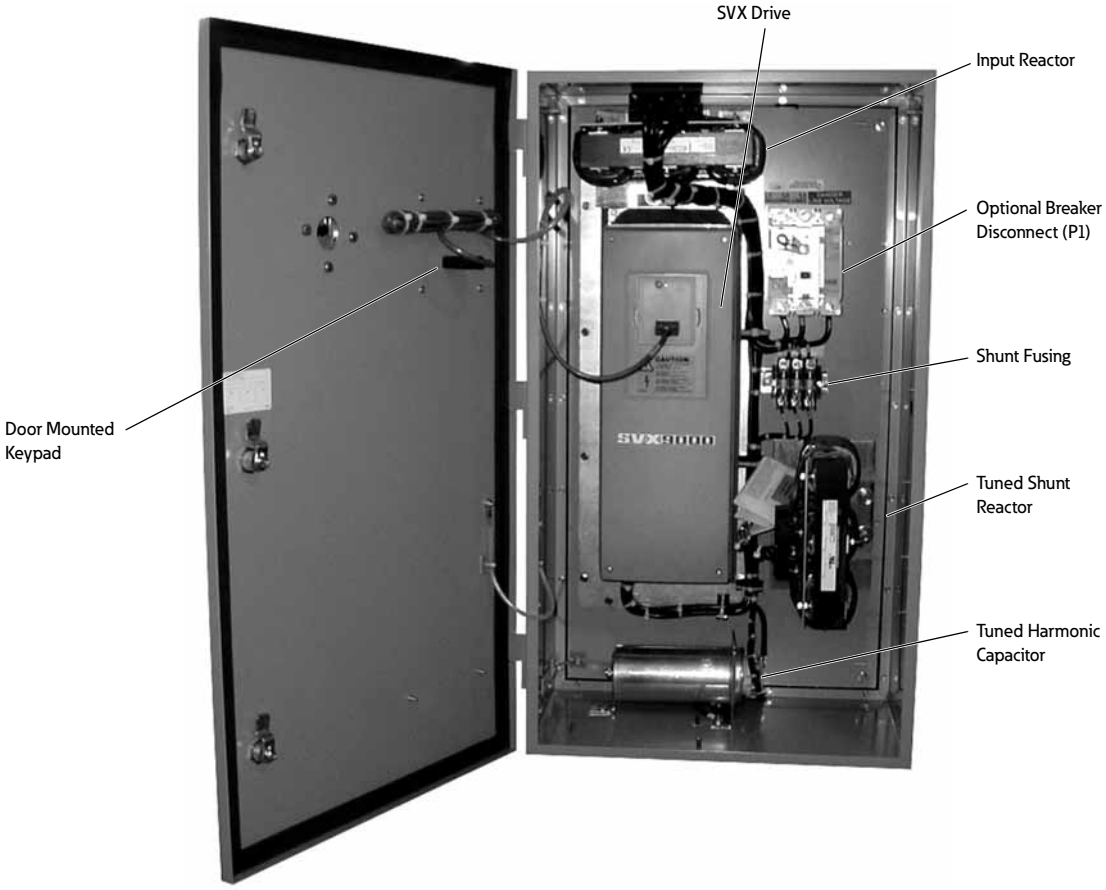

Catalog Number Selection

Catalog Number Selection is for reference only. Not all option combinations may be available.

2

CFX Enclosed—Base Catalog Number

CFX F07 1 A 1 _ _ _ _ _ _

Product Family

CFX = Enclosed CFX passive filtered drives

Output Horsepower Rating

480 V	
007 = 7.5 hp	**075** = 75 hp
010 = 10 hp	**100** = 100 hp
015 = 15 hp	**125** = 125 hp
020 = 20 hp	**150** = 150 hp
025 = 25 hp	**200** = 200 hp
030 = 30 hp	**250** = 250 hp
040 = 40 hp	**300** = 300 hp
050 = 50 hp	**350** = 350 hp
060 = 60 hp	**400** = 400 hp

Phasing and Voltage Rating ①

4 = Input: Three-phase, 480 V Output: Three-phase

Drive Type/Braking/Application ②

A = Standard drive/no brake chopper/low overload
B = Standard drive/brake chopper/low overload
C = Standard drive/no brake chopper/high overload
D = Standard drive/brake chopper/high overload
E = High-performance drive/no brake chopper/low overload
F = High-performance drive/brake chopper/low overload
G = High-performance drive/no brake chopper/high overload
H = High-performance drive/brake chopper/high overload

Enclosure Rating ③

1 = NEMA Type 1
2 = NEMA Type 12
3 = NEMA Type 3R
6 = NEMA Type 1 Filtered and gasketed
• = Custom option

Options ④

See **Page V6-T2-275** for catalog number option selection.

Notes

① Single-phase voltage refers to the supply voltage. Output voltage will be three-phase and equal to the magnitude of the input voltage.
② Brake chopper is a factory-installed option only. Braking resistors sold separately. See SVX catalog section for selection.
③ Additional enclosure options including NEMA 4 and 4X are available. Please contact the factory for configuration and pricing.
④ Part number configuration continued on the following page.

Catalog Number Selection is for reference only. Not all option combinations may be available.

CFX Enclosed—Catalog Number Options

CFX F07 1 A 1 — 2 0 0 B 1 0 0 0 0

Base Catalog Number Example

See **Page V6-T2-274** for base catalog number selection.

Power Disconnect Options

0 = None
1 = MCP disconnect ①
2 = Circuit breaker
3 = Circuit breaker/isolation fusing
5 = Circuit breaker/isolation fusing/SPD
8 = Circuit breaker/SPD
E = Isolation fuses
G = Isolation fuses/SPD
• = Custom option ②

Bypass Options ③

0 = None
1 = Manual HOA bypass
2 = Manual HOA bypass/isolation fusing
4 = Manual HOA bypass/isolation fusing/SPD
7 = Manual HOA bypass/SPD
H = Manual HOA RVSS bypass
J = Manual HOA RVSS bypass/isolation fusing
L = Manual HOA RVSS bypass/isolation fusing/SPD
P = Manual HOA RVSS bypass/SPD
• = Custom option ②

Output Power Options ④

0 = None
A = Output contactor
B = 3% Output reactor
D = dV/dt filter
E = 3% Output Reactor/output contactor
G = dV/dt/output contactor
• = Custom option ②

Control Options ⑤

0 = None
1 = Speed pot
2 = Start-stop pushbutton
3 = Start-stop pushbutton with speed pot
A = HOA switch
B = Start-stop pushbutton with speed pot & HOA switch
C = Start-stop pushbutton with HOA switch
D = HOA switch with speed pot
• = Custom option ②

Option Boards 2

Same options and codes as Option Boards 1

Option Boards 1

0 = No option
6 = 6 DI, 1 ext +24 Vdc/EXT +24 Vdc
7 = 1 RO (NC-NO), 1 RO (NO), 1 therm
8 = 1 AI (mA isolated), 2 AO (mA isolated), 1 ext +24 Vdc/EXT +24 Vdc
9 = 3 RO (NO)
A = 1 ext +24 Vdc/EXT +24 Vdc, 3 Pt100
B = 1 RO (NO), 5 DI 42–240 Vac input
C = Encoder low volt +5 V / 15 V / 24 V (high-performance drive only)
D = Encoder high volt +15 V / 24 V (high-performance drive only)
E = Double encoder (high-performance drive only)
• = Custom option ②

Communication Options

0 = No option
1 = PROFIBUS-DP
2 = LonWorks
3 = CANopen (slave)
4 = DeviceNet
5 = PROFIBUS-DP (D9 connector)
6 = Modbus
7 = Modbus (D9 connector)
8 = Johnson Controls N2
9 = Modbus TCP
A = BACnet
B = EtherNet/IP
C = RS-232 with D9 connector
• = Custom option ②

Enclosure Options

0 = None
1 = Floor stand—12 inches
2 = Floor stand—22 inches
A = Space heater
B = Space heater & 12-inch floor stands
C = Space heater & 22-inch floor stands
• = Custom option ②

Light Options ⑤

0 = None
1 = Non-bypass light kit—Power On, Run, Fault
2 = Bypass light kit—On, VFD Run, Fault, Bypass Run
• = Custom option ②

Notes

① HMCP disconnect option required and only available when bypass is selected.
② More options are available as Engineered to Order through the Bid Manager tool.
③ All bypass options include third contactor for drive isolation when in bypass mode.
④ Output contactor not available with bypass. Bypass comes standard with output contactor.
⑤ Pilot devices are 22 mm standard. 30 mm options are available as engineered to order through the Bid Manager tool.

Product Selection

480 V Drives

CFX Enclosed Drives

480 V Drives—Constant Torque (CT)/High Overload (I_H) Enclosed Drives

hp	Current (A)	Drive Frame Size	NEMA Type 1 Base Catalog Number ①	NEMA Type 12 Base Catalog Number ①	NEMA Type 3R Base Catalog Number ①
7.5	11	5	**CFX0074D1**	**CFX0074D2**	**CFX0074D3**
10	14	5	**CFX0104D1**	**CFX0104D2**	**CFX0104D3**
15	21	5	**CFX0154D1**	**CFX0154D2**	**CFX0154D3**
20	27	6	**CFX0204D1**	**CFX0204D2**	**CFX0204D3**
25	34	6	**CFX0254D1**	**CFX0254D2**	**CFX0254D3**
30	40	6	**CFX0304D1**	**CFX0304D2**	**CFX0304D3**
40	52	7	**CFX0404C1**	**CFX0404C2**	**CFX0404C3**
50	65	7	**CFX0504C1**	**CFX0504C2**	**CFX0504C3**
60	77	7	**CFX0604C1**	**CFX0604C2**	**CFX0604C3**
75	96	8	**CFX0754C1**	**CFX0754C2**	**CFX0754C3**
100	124	8	**CFX1004C1**	**CFX1004C2**	**CFX1004C3**
125	156	8	**CFX1254C1**	**CFX1254C2**	**CFX1254C3**
150	180	9	**CFX1504C1**	**CFX1504C2**	**CFX1504C3**
200	240	9	**CFX2004C1**	**CFX2004C2**	**CFX2004C3**
250	302	10	**CFX2504G1**	**CFX2504G2**	**CFX2504G3**
300	361	10	**CFX3004G1**	**CFX3004G2**	**CFX3004G3**
350	414	10	**CFX3504G1**	**CFX3504G2**	**CFX3504G3**

CFX Enclosed Drives

480 V Drives—Variable Torque (VT)/Low Overload (I_L) Enclosed Drives

hp	Current (A)	Drive Frame Size	NEMA Type 1 Base Catalog Number ①	NEMA Type 12 Base Catalog Number ①	NEMA Type 3R Base Catalog Number ①
7.5	11	4	**CFX0074B1**	**CFX0074B2**	**CFX0074B3**
10	14	5	**CFX0104B1**	**CFX0104B2**	**CFX0104B3**
15	21	5	**CFX0154B1**	**CFX0154B2**	**CFX0154B3**
20	27	5	**CFX0204B1**	**CFX0204B2**	**CFX0204B3**
25	34	6	**CFX0254B1**	**CFX0254B2**	**CFX0254B3**
30	40	6	**CFX0304B1**	**CFX0304B2**	**CFX0304B3**
40	52	6	**CFX0404B1**	**CFX0404B2**	**CFX0404B3**
50	65	7	**CFX0504A1**	**CFX0504A2**	**CFX0504A3**
60	77	7	**CFX0604A1**	**CFX0604A2**	**CFX0604A3**
75	96	7	**CFX0754A1**	**CFX0754A2**	**CFX0754A3**
100	124	8	**CFX1004A1**	**CFX1004A2**	**CFX1004A3**
125	156	8	**CFX1254A1**	**CFX1254A2**	**CFX1254A3**
150	180	8	**CFX1504A1**	**CFX1504A2**	**CFX1504A3**
200	240	9	**CFX2004A1**	**CFX2004A2**	**CFX2004A3**
250	302	10	**CFX2504E1**	**CFX2504E2**	**CFX2504E3**
300	361	10	**CFX3004E1**	**CFX3004E2**	**CFX3004E3**
350	414	10	**CFX3504E1**	**CFX3504E2**	**CFX3504E3**
400	477	10	**CFX4004E1**	**CFX4004E2**	**CFX4004E3**

Note

① Table is for base catalog number reference only. For complete catalog number selection, see **Page V6-T2-274**.

Enclosed Passive Filtered Drive Option Board Kits

The enclosed passive filtered drive series can accommodate a wide selection of expander and adapter option boards to customize the drive for your application needs. The drive's control unit is designed to accept a total of five option boards.

The enclosed passive filtered drive series factory-installed standard board configuration includes an A9 I/O board and an A2 relay output board, which are installed in slots A and B.

Option Boards

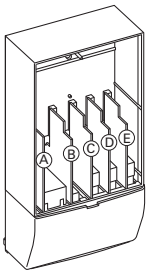

Option Board Kits

Option Kit Description ①	Allowed Slot Locations ②	Field Installed Catalog Number	Factory Installed Option Designator	SVX Ready Programs Basic	Local/ Remote	Standard	MSS	PID	Multi-P.	PFC
Standard I/O Cards										
2 RO (NC/NO)	B	**OPTA2**	—	■	■	■	■	■	■	■
6 DI, 1 DO, 2 AI, 1 AO, 1 +10 Vdc ref, 2 ext +24 Vdc/ext +24 Vdc	A	**OPTA9**	—	■	■	■	■	■	■	■
Extended I/O Cards										
6 DI	B, C, **D**, E	**OPTB1**	**B1**	—	—	—	—	—	■	■
1 RO (NC/NO), 1 RO (NO), 1 therm	B, C, **D**, E	**OPTB2**	**B2**	—	—	—	—	—	■	■
1 AI (mA isolated), 2 AO (mA isolated)	B, C, **D**, E	**OPTB4**	**B4**	■	■	■	■	■	■	■
3 RO (NO)	B, C, **D**, E	**OPTB5**	**B5**	—	—	—	—	—	■	■
3 Pt100 RTD board	B, C, **D**, E	**OPTB8**	**B8**	—	—	—	—	—	■	—
1 RO (NO), 5 DI 42–240 Vac input	B, C, **D**, E	**OPTB9**	**B9**	—	—	—	—	—	■	■
Communication Cards ③										
Modbus	D, **E**	**OPTC2**	**C2**	■	■	■	■	■	■	■
Modbus TCP	D, **E**	**OPTCI**	**CI**	■	■	■	■	■	■	■
BACnet	D, **E**	**OPTCJ**	**CJ**	■	■	■	■	■	■	■
EtherNet/IP	D, **E**	**OPTCQ**	**CQ**	■	■	■	■	■	■	■
Johnson Controls N2	D, **E**	**OPTC2**	**CA**	■	■	■	■	■	■	■
PROFIBUS DP	D, **E**	**OPTC3**	**C3**	■	■	■	■	■	■	■
LonWorks	D, **E**	**OPTC4**	**C4**	■	■	■	■	■	■	■
PROFIBUS DP (D9 connector)	D, **E**	**OPTC5**	**C5**	■	■	■	■	■	■	■
CANopen (slave)	D, **E**	**OPTC6**	**C6**	■	■	■	■	■	■	■
DeviceNet	D, **E**	**OPTC7**	**C7**	■	■	■	■	■	■	■
Modbus (D9 type connector)	D, **E**	**OPTC8**	**C8**	■	■	■	■	■	■	■
RS-232 with D9 connection	D, **E**	**OPTD3**	**D3**	■	■	■	■	■	■	■

Notes

① AI = Analog Input; AO = Analog Output, DI = Digital Input, DO = Digital Output, RO = Relay Output
② Option card must be installed in one of the slots listed for that card. Slot indicated in bold is the preferred location.
③ OPTC2 is a multi-protocol option card.

Modbus RTU Network Communications

The Modbus Network Card OPTC2 is used for connecting the SVX Drive as a slave on a Modbus network. The interface is connected by a 9-pin DSUB connector (female) and the baud rate ranges from 300 to 19,200 baud. Other communication parameters include an address range from 1 to 247; a parity of None, Odd or Even; and the stop bit is 1.

PROFIBUS Network Communications

The PROFIBUS Network Card OPTC3 is used for connecting the SVX Drive as a slave on a PROFIBUS-DP network. The interface is connected by a 9-pin DSUB connector (female). The baud rates range from 9.6 Kbaud to 12 Mbaud, and the addresses range from 1 to 127.

LonWorks Network Communications

The LonWorks Network Card OPTC4 is used for connecting the SVX Drive on a LonWorks network. This interface uses Standard Network Variable Types (SNVT) as data types. The channel connection is achieved using a FTT-10 A Free Topology transceiver via a single twisted transfer cable. The communication speed with LonWorks is 78 kBits/s.

CANopen (Slave) Communications

The CANopen (Slave) Network Card OPTC6 is used for connecting the SVX Drive to a host system. According to ISO11898 standard cables to be chosen for CANbus should have a nominal impedance of 120 ohms, and specific line delay of nominal 5 as/m. 120 ohm line termination resistors required for installation.

DeviceNet Network Communications

The DeviceNet Network Card OPTC7 is used for connecting the SVX Drive on a DeviceNet Network. It includes a 5.08 mm pluggable connector. Transfer method is via CAN using a two-wire twisted shielded cable with two-wire bus power cable and drain. The baud rates used for communication include 125 Kbaud, 250 Kbaud and 500 Kbaud.

Johnson Controls Metasys N2 Network Communications

The OPTC2 fieldbus board provides communication between the SVX Drive and a Johnson Controls Metasys™ N2 network. With this connection, the drive can be controlled, monitored and programmed from the Metasys system. The N2 fieldbus is available as a factory-installed option and as a field-installable kit.

Modbus/TCP Network Communications

The Modbus/TCP Network Card OPTCI is used for connecting the SVX Drive to Ethernet networks using Modbus protocol. It includes an RJ-45 pluggable connector. This interface provides a selection of standard and custom register values to communicate drive parameters. The board supports 10 Mbps and 100 Mbps communication speeds. The IP address of the board is configurable over Ethernet using a supplied software tool.

BACnet Network Communications

The BACnet Network Card OPTCJ is used for connecting the SVX Drive to BACnet networks. It includes a 5.08 mm pluggable connector. Data transfer is Master-Slave/Token Passing (MS/TP) RS-485. This interface uses a collection of 30 Binary Value Objects (BVOs) and 35 Analog Value Objects (AVOs) to communicate drive parameters. The card supports 9.6, 19.2 and 38.4 Kbaud communication speeds and supports network addresses 1 to 127.

EtherNet/IP Network Communications

The EtherNet/IP Network Card OPTCK is used for connecting the SVX Drive to Ethernet/Industrial Protocol networks. It includes an RJ-45 pluggable connector. The interface uses CIP objects to communicate drive parameters (CIP is "Common Industrial Protocol," the same protocol used by DeviceNet). The board supports 10 Mbps and 100 Mbps communication speeds. The IP address of the board is configurable by Static, BOOTP and DHCP methods.

Enclosure Selection

CFX Drives

Enclosure selection charts are based on physical space limitations only and only to be used as a reference. For actual enclosure sizing, refer to Bid Manager.

Note: Filtered enclosure sizing includes dedicated space for passive filter, input fuses, circuit breaker or fusible disconnect, CPT, SPD, heater/thermostat, control relay and terminal blocks.

Filtered Enclosure X-Space

Enclosure Size	Frame 4	Frame 5	Frame 6	Frame 7	Frame 8
AX	—	—	—	—	—
BX	0	0	—	—	—
CX	3	3	2	2	—
DX	14	14	13	13	10

Filtered Power Options X-Space

Power Options	Frame 4	Frame 5	Frame 6	Frame 7	Frame 8
3% Output reactor	1	1	3	5	6
dV/dt filter	3	3	3	5	6
Output contactor	1	1	1	1	1

Larger Frame Enclosure Sizes

Frame Size	Type 1	Type 12	Type 1 Filtered and Gasketed	Type 3R
Frame 9	Size 8	—	Size 8	Size F
Frame 10	Size 9	Size 9	—	①

Note: Filtered bypass enclosure sizing includes dedicated space for a passive filter, input fuses, MCP, CPT, input contactor, output bypass contactors, overload relay, SPD, heater/thermostat, control relay and terminal blocks.

Filtered Bypass Enclosure X-Space

Enclosure Size	Frame 4	Frame 5	Frame 6	Frame 7	Frame 8
AX	—	—	—	—	—
BX	—	—	—	—	—
CX	2	1	0	—	—
DX	13	12	11	10	6

Filtered Bypass Power Options X-Space

Power Options	Frame 4	Frame 5	Frame 6	Frame 7	Frame 8
RVSS Bypass	1	1	3	5	6
3% Output reactor	2	2	2	3	4
dV/dt filter	3	3	3	5	6

Larger Frame Enclosure Sizes

Frame Size	Type 1	Type 12	Type 1 Filtered and Gasketed	Type 3R
Frame 9	Size 8	—	Size 8	Size F
Frame 10	Size 9	Size 9	—	①

Note

① Consult factory.

Options

Input Power Options

Option	Description
HMCP Disconnect	The HMCP motor protection circuit breaker uses an electronic trip unit to provide typical motor overload relay functionality and short-circuit protection against potential phase-to-phase or phase-to-ground faults.
Circuit Breaker	Utilizes a circuit breaker to provide a means of short-circuit protection for the power cables between it and the drive, and protection from high-level ground faults on the power cable. Allows a convenient means of disconnecting the drive from the line, and the operating mechanism can be padlocked in the OFF position. This is factory mounted in the enclosure.
Isolation Fusing	Provides high-level fault protection of the drive input power circuit from the load side of the fuses to the input side of the power transistors. This option consists of three 200 kA fuses that are factory mounted in the enclosure.
3% Input Reactor	The input reactor is a three-phase series inductance on the line side of an AFD. It is used to provide a reduction in voltage and current harmonics. It also provides increased input protection for AFD and its semiconductors from line transients.
SPD	Provides a UL 1449 surge protection device (SPD) rated for 40 kA/ph that is connected to the line side terminals.
Fused Disconnect	Utilizes fusing to provide a means of short-circuit protection for the power cables between it and the drive, and protection from high-level ground faults on the power cable. Allows a convenient means of disconnecting the drive from the line, and the operating mechanism can be padlocked in the OFF position. This is factory mounted in the enclosure.

Bypass Options

Option	Description
Manual HOA Bypass	Provides a three-position selector switch that allows the user to select either a HAND or AUTO mode of operation. HAND mode is defaulted keypad operation, and AUTO mode is defaulted to control from an external terminal source. These modes of operation can be configured via programming to allow for alternate combinations of start and speed sources. Start and speed sources include keypad, I/O and fieldbus.
Manual HOA RVSS Bypass	This option adds a reduced voltage soft starter to bypass assembly for soft starting in bypass mode.

Output Power Options

Option	Description
Output Contactor	Provides a means for positive disconnection of the drive output from the motor terminals. The contactor coil is controlled by the drive's run or permissive logic. NC and NO auxiliary contacts rated at 10 A, 600 Vac are provided for customer use. This option includes a low VA 115 Vac fused control power transformer and is factory mounted in the enclosure.
3% Output Reactor	The output reactor is a three-phase series inductance on the load side of a VFD. It is used to reduce transient voltage (dv/dt) and peak voltages at the motor terminals. A 3% output filter is recommended for motor cable lengths up to 300 ft (10 m).
dV/dt Filter	Used to reduce the transient voltage (dV/dt) at the motor terminals. Recommended for motor cable lengths over 300 ft (10 m) and up to 1000 ft (304.8 m). This option is mounted in the enclosure.

Control Options

Option	Description
Speed Pot	Provides the ability to adjust the frequency reference using a door-mounted potentiometer. This option uses the 10 Vdc reference to generate a 0–10 V signal at the analog voltage input signal terminal. When the HOA bypass option is added, the speed is controlled when the HOA switch is in the HAND position. Without the HOA bypass option, a two-position switch (labeled local/remote) is provided on the keypad to select speed reference from the speed potentiometer or a remote speed signal.
HOA Switch	Provides a three-position selector switch that allows the user to select either a HAND or AUTO mode of operation. HAND mode is defaulted to keypad operation, and AUTO mode is defaulted to control from an external terminal source. These modes of operation can be configured via drive programming to allow for alternate combinations of start and speed sources. Start and speed sources include Keypad, I/O and fieldbus.
Start-Stop Pushbutton	Provides door-mounted START and STOP pushbuttons for either bypass or non-bypass configurations.

Light Options

Option	Description
Non-Bypass Light Kit—Power On, Run, Fault	Provides a white POWER ON light that indicates power to the enclosed cabinet, a green RUN light that indicates the drive is running and a red FAULT light that indicates a drive fault has occurred.
Bypass Light Kit—On, VFD Run, Fault, Bypass Run	Provides a white POWER ON light that indicates power to the enclosed cabinet, a green RUN light that indicates the drive is running, a red FAULT light that indicates a drive fault has occurred and an amber light that indicates when the motor is running in Bypass mode.

Enclosure Options

Option	Description
Floor Stand 12 in	Converts a normally wall-mounted enclosure to a floor-standing enclosure with a height of 12 in (304.8 mm).
Floor Stand 22 in	Converts a normally wall-mounted enclosure to a floor-standing enclosure with a height of 22 in (558.8 mm).

Technical Data and Specifications

Enclosed Passive Filtered Drives

Description	Specification
Primary Design Features	
45–66 Hz input frequency	Standard
Output: AC volts maximum	Input Voltage Base
Output frequency range	0–320 Hz
Initial output current (I_H)	250% for 2 seconds
Overload (1 minute [I_H/I_L])	150%/110%
Enclosure space heater	Optional
Oversize enclosure	Standard
Output contactor	Optional
Bypass motor starter	Optional
Listings	UL, cUL, 508C
Protection Features	
Incoming line fuses	Optional
AC input circuit disconnect	Optional
Phase rotation insensitive	Standard
EMI filter	Standard—FR6 thru FR9 ①
Input phase loss protection	Standard
Input overvoltage protection	Standard
Line surge protection	Standard
Output short-circuit protection	Standard
Output ground fault protection	Standard
Output phase protection	Standard
Overtemperature protection	Standard
DC overvoltage protection	Standard
Drive overload protection	Standard
Motor overload protection	Standard
Programmer software	Optional
Local/remote keypad	Standard
Keypad lockout	Standard
Fault alarm output	Standard
Built-in diagnostics	Standard
Surge protective device	Optional

Description	Specification
Input/Output Interface Features	
Setup adjustment provisions	
Remote keypad/display	Standard
Personal computer	Standard
Operator control provisions	
Drive mounted keypad/display	Standard
Remote keypad/display	Standard
Conventional control elements	Standard
Serial communications	Optional
115 Vac control circuit	Optional
Speed setting inputs	
Keypad	Standard
0–10 Vdc potentiometer/voltage signal	Standard
4–20 mA isolated	Configurable
4–20 mA differential	Configurable
3–15 psig	Optional
Analog outputs	
Speed/frequency	Standard
Torque/load/current	Programmable
Motor voltage	Programmable
Kilowatts	Programmable
0–10 Vdc signals	Configurable w/jumpers
4–20 mA DC signals	Standard
Isolated signals	Optional
Discrete outputs	
Fault alarm	Standard
Drive running	Standard
Drive at set speed	Programmable
Optional parameters	14
Dry contacts	2 relays Form C
Open collector outputs	1
Additional discrete outputs	Optional
Communications	
RS-232	Standard
RS-422/485	Optional
DeviceNet™	Optional
Modbus RTU	Optional
CANopen (slave)	Optional
PROFIBUS-DP	Optional
Lonworks®	Optional
Johnson Controls Metasys™ N2	Optional
EtherNet/IP/Modbus TCP	Optional
BACnet	Optional

Note

① The EMI filter is optional in FR10.

Enclosed Passive Filtered Drives, continued

Description	Specification
Performance Features	
Sensorless vector control	Standard
Volts/hertz control	Standard
IR and slip compensation	Standard
Electronic reversing	Standard
Dynamic braking	Optional
DC braking	Standard
PID setpoint controller	Programmable
Critical speed lockout	Standard
Current (torque) limit	Standard
Adjustable acceleration/deceleration	Standard
Linear or S curve accel/decel	Standard
Jog at preset speed	Standard
Thread/preset speeds	7
Automatic restart	Selectable
Coasting motor start	Standard
Coast or ramp stop selection	Standard
Elapsed time meter	Optional
Standard Conditions for Application and Service	
Maximum operating ambient temperature	0 to 40 °C
Storage temperature	–40 to 60 °C
Humidity (maximum), non-condensing	95%
Altitude	100% load capacity (no derating) up to 3280 ft (1000 m); 1% derating for each 328 ft (100 m) above 3280 ft (1000 m); max. 9842 ft (3000 m)
Line voltage variation	+10/–15%
Line frequency variation	45–66 Hz
Efficiency	>96%
Power factor (displacement)	0.99

Standard I/O Specifications

Description	Specification
Six–digital input programmable	24 V: "0" ≤10 V, "1" ≥18V,R_i >5 kohms
Two–analog input configurable w/ jumpers	Voltage: 0–±10 V, R_i >200 kohms Current: 0 (4)–20 mA, R_i = 250 kohms
Two–digital output programmable	Form C relays 250 Vac or 30 Vdc 2 Amp resistive
One–digital output programmable	Open collector 48 Vdc 50 mA
One–analog output programmable configurable w/jumper	0–20 mA, R_L max. 500 ohms 10 bits ±2%

I/O Specifications for Control/Communication Options

Description	Specification
Analog voltage, input	0–±10 V, R_i ≥200 kilohms
Analog current, input	0 (4)–20 mA, R_i = 250 ohms
Digital input	24 V: "0" ≤10 V, "1" ≥18V, R_i >5 kilohms
Auxiliary voltage	24 V (±20%), max. 50 mA
Reference voltage	10 V ±3%, max. 10 mA
Analog current, output	0 (4)–20 mA, R_L = 500 kilohms, resolution 10 bit, accuracy ≤±2%
Analog voltage, output	0 (2)–10 V, R_L ≥1 kohm, resolution 10 bit, accuracy ≤±2%
Relay output max. switching voltage	300 Vdc, 250 Vac
Relay output max. switching load	3 A/24 Vdc, 300 Vdc, 250 Vac ②
Relay output max. continuous load	2 A rms
Thermistor input	R_{trip} = 4.7 kohms

Notes

① Units FR10 rated 40 °C.

② For applications above 3 A consult instruction manual.

Wiring Diagram

Control Input/Output

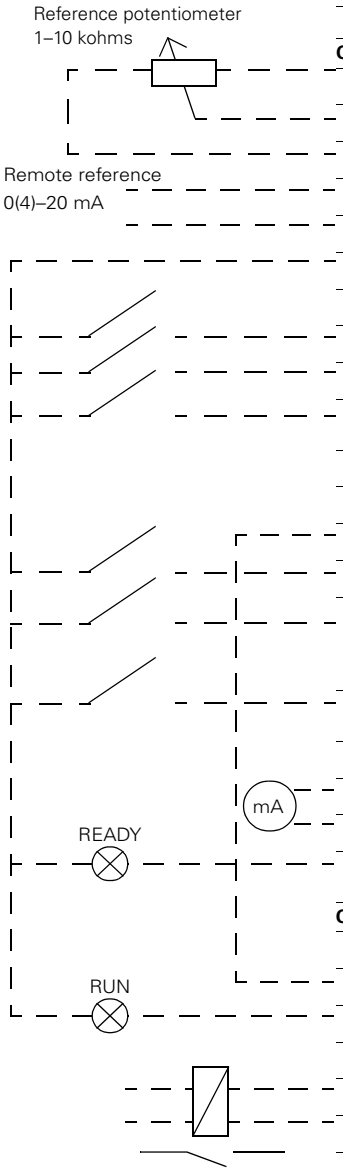

Basic Application Default I/O Configuration

Terminal		Signal	Description		
OPTA9					
1	+10 V_{ref}	Reference output	Voltage for potentiometer, etc.		
2	AI1+	Analog input, voltage range 0–10 Vdc	Voltage input frequency reference		
3	AI1–	I/O Ground	Ground for reference and controls		
4	AI2+	Analog input, current range 0–20 mA	Current input frequency reference		
5	AI2–				
6	+24 V	Control voltage output	Voltage for switches, etc. max 0.1 A		
7	GND	I/O ground	Ground for reference and controls		
8	DIN1	Start forward	Contact closed = start forward		
9	DIN2	Start reverse	Contact closed = start reverse		
10	DIN3	External fault input (programmable)	Contact open = no fault Contact closed = fault		
11	CMA	Common for DIN 1–DIN 3	Connect to GND or +24 V		
12	+24 V	Control voltage output	Voltage for switches (see terminal 6)		
13	GND	I/O ground	Ground for reference and controls		
14	DIN4	Multi-step speed select 1	**DIN4**	**DIN5**	**Frequency Ref.**
15	DIN5	Multi-step speed select 2	Open Closed Open Closed	Open Open Closed Closed	Ref.V_{in} Multi-step ref.1 Multi-step ref.2 Ref_{Max}
16	DIN6	Fault reset	Contact open = no action Contact closed = fault reset		
17	CMB	Common for DIN4–DIN6	Connect to GND or +24 V		
18	AO1+	Output frequency Analog output	Programmable Range 0–20 mA, R_L max. 500 ohms		
19	AO1–				
20	DO1	Digital output READY	Programmable Open collector, I ≤50 mA, V ≤48 Vdc		
OPTA2					
21	RO1	Relay output 1 RUN			
22	RO1				
23	RO1				
24	RO2	Relay output 2 FAULT			
25	RO2				
26	RO2				

Dimensions

Approximate Dimensions in Inches (mm)

BX Box Type 1

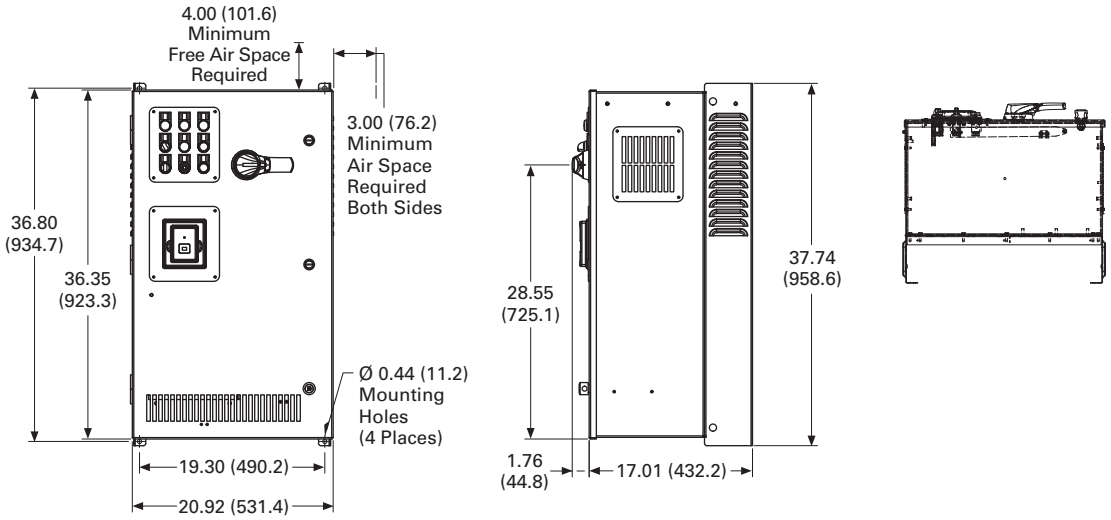

BX Box Type 1—12 Inch Floor Stands

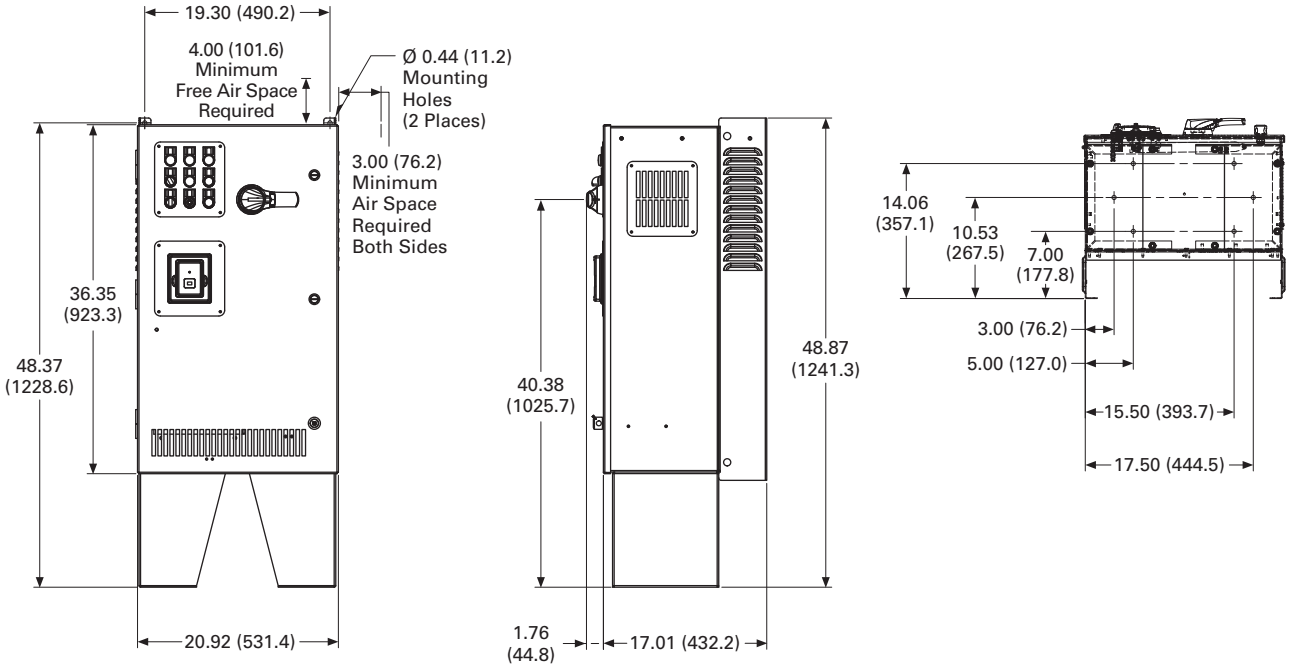

Approximate Dimensions in Inches (mm)

BX Box Type 1—22 Inch Floor Stands

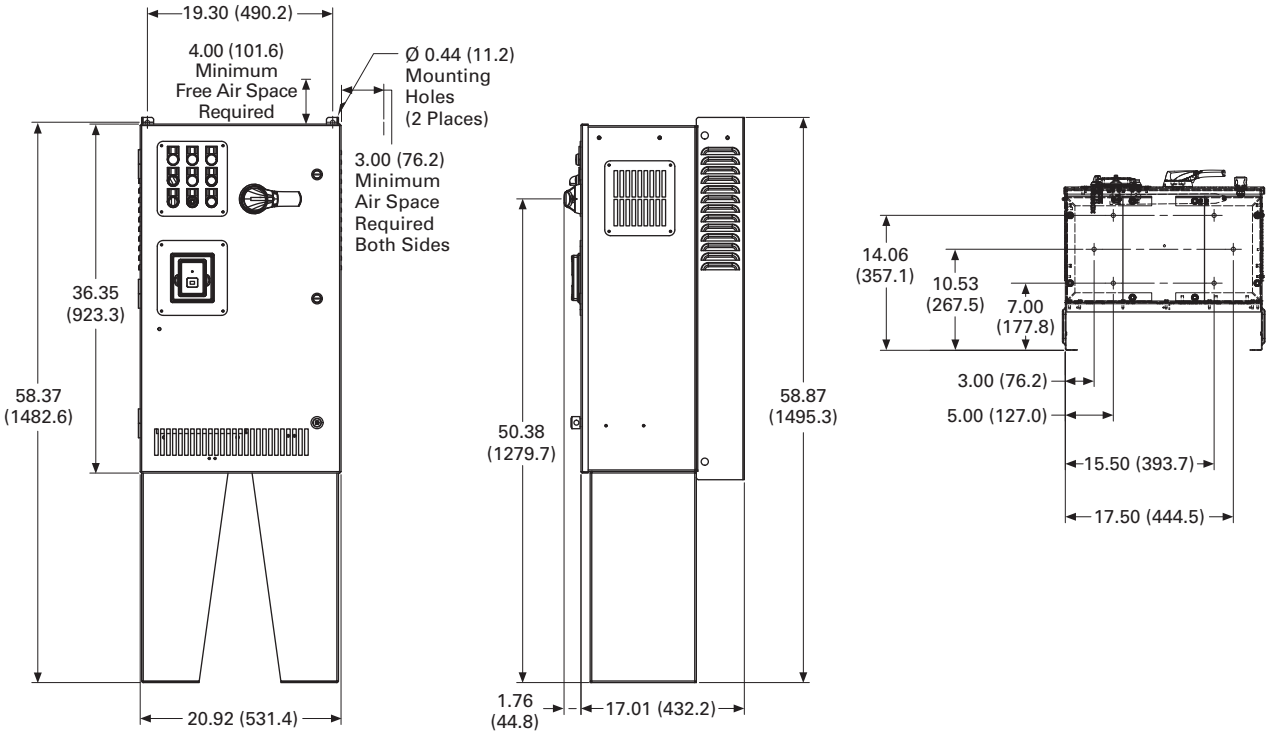

BX Box Type 12

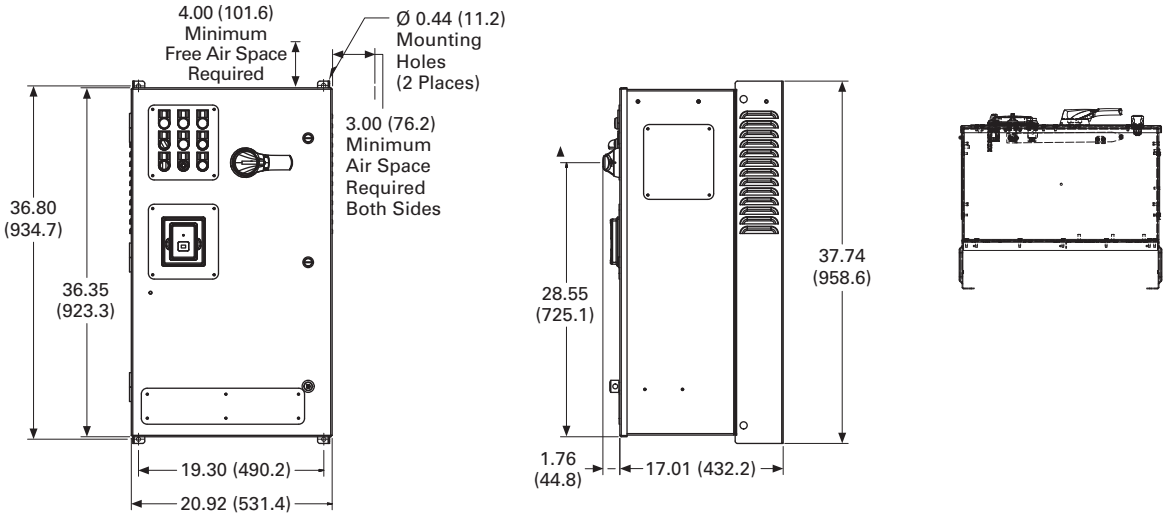

Approximate Dimensions in Inches (mm)

BX Box Type 12—12 Inch Floor Stands

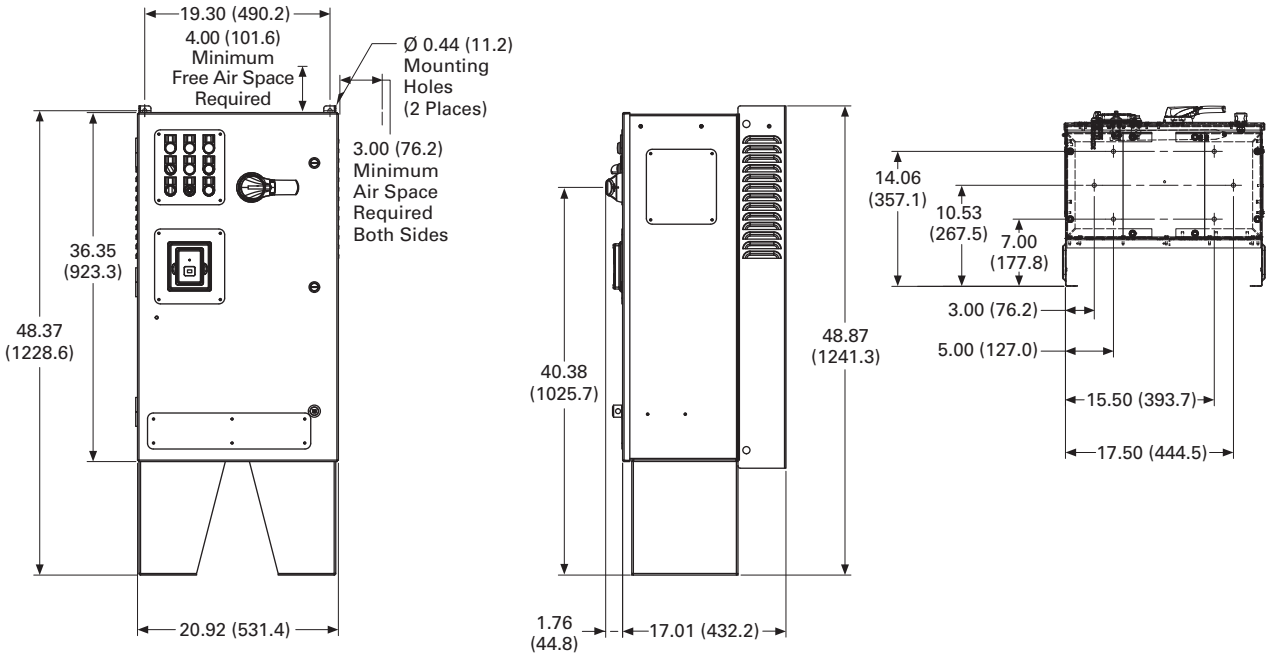

BX Box Type 12—22 Inch Floor Stands

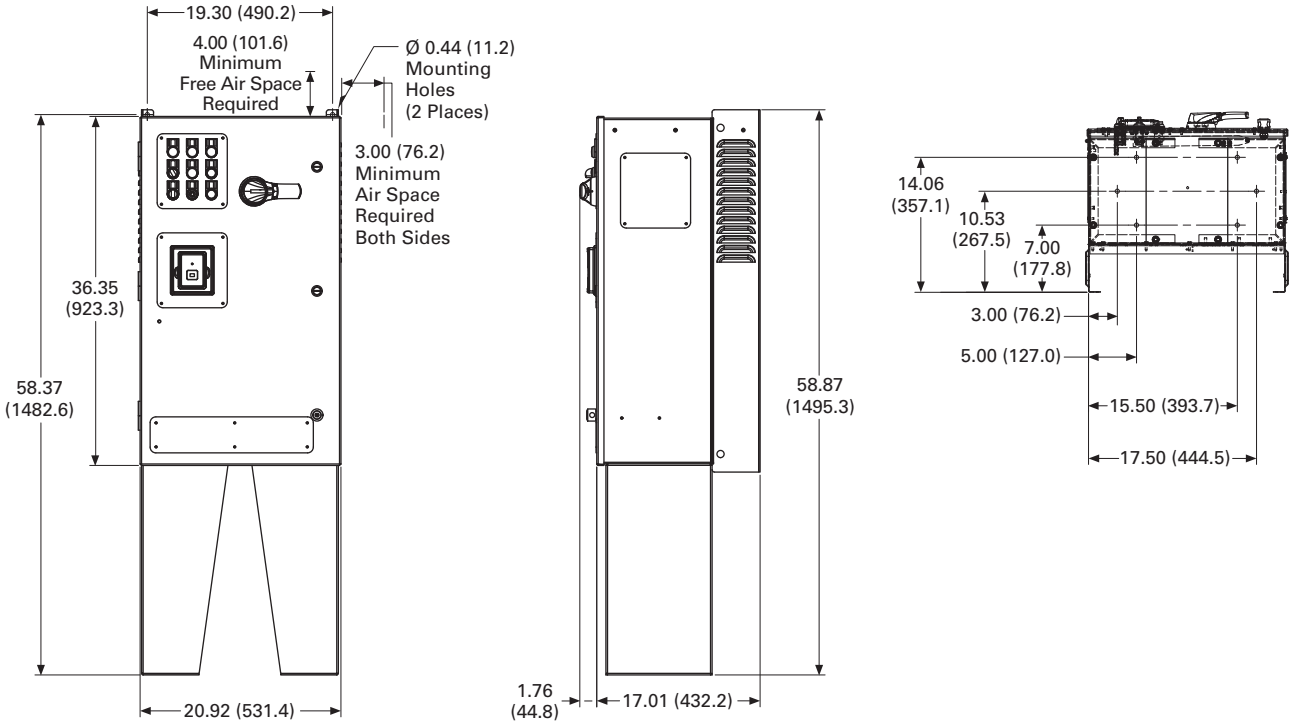

Approximate Dimensions in Inches (mm)

BX Box Type 3R

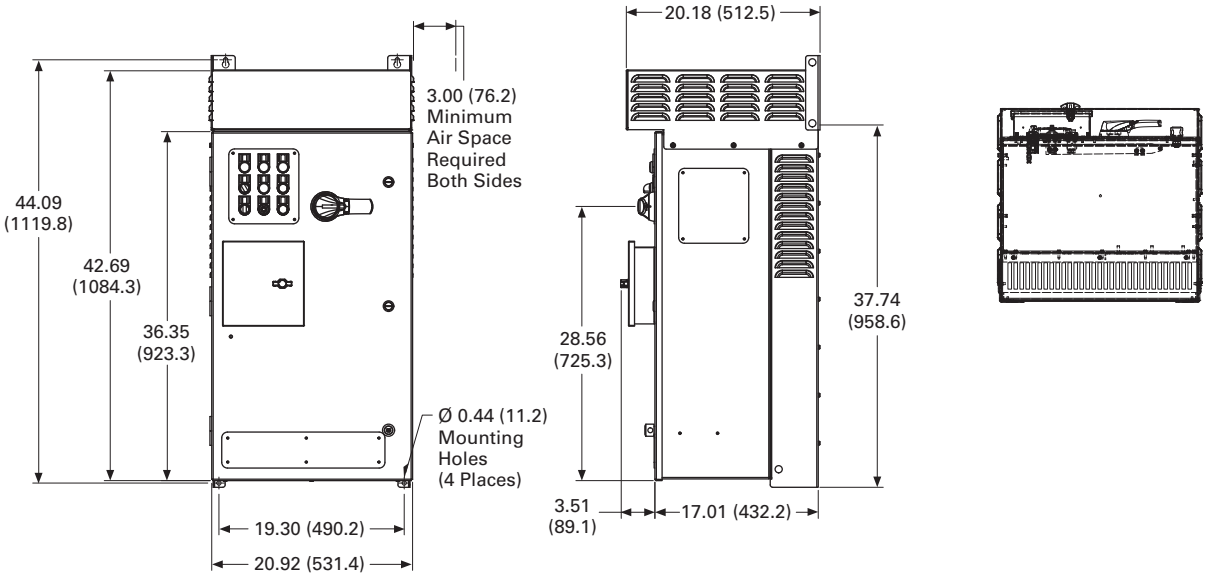

BX Box Type 3R—12 Inch Floor Stands

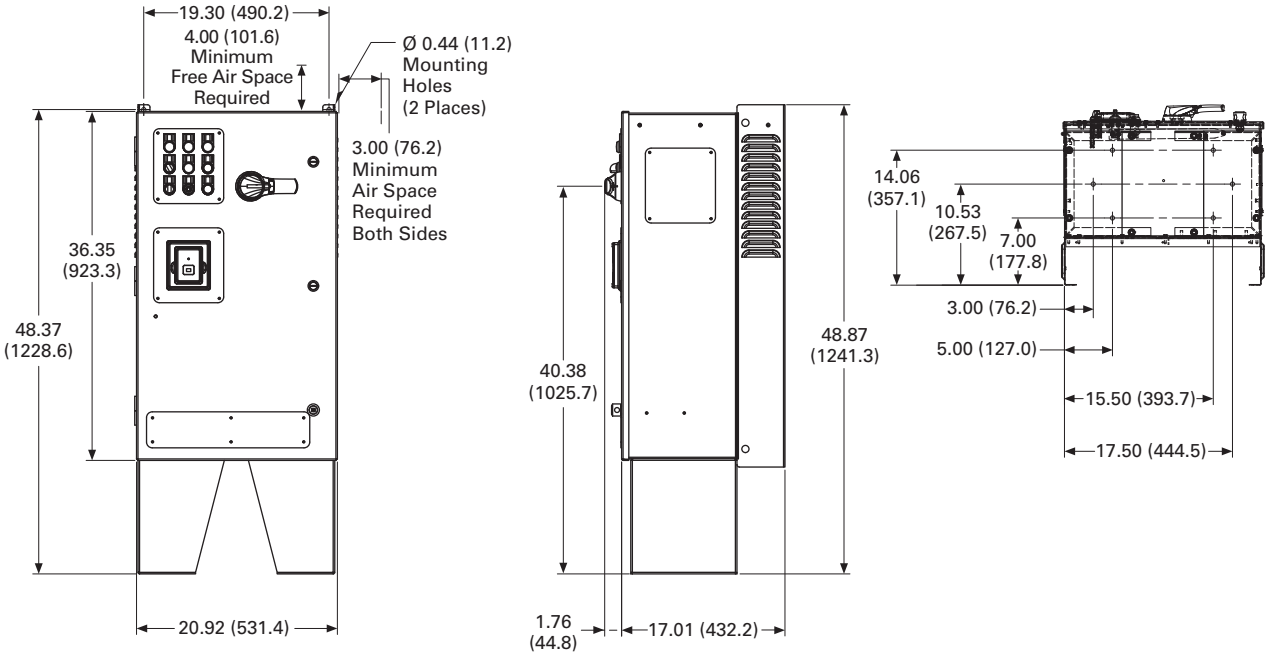

Approximate Dimensions in Inches (mm)

BX Box Type 3R—22 Inch Floor Stands

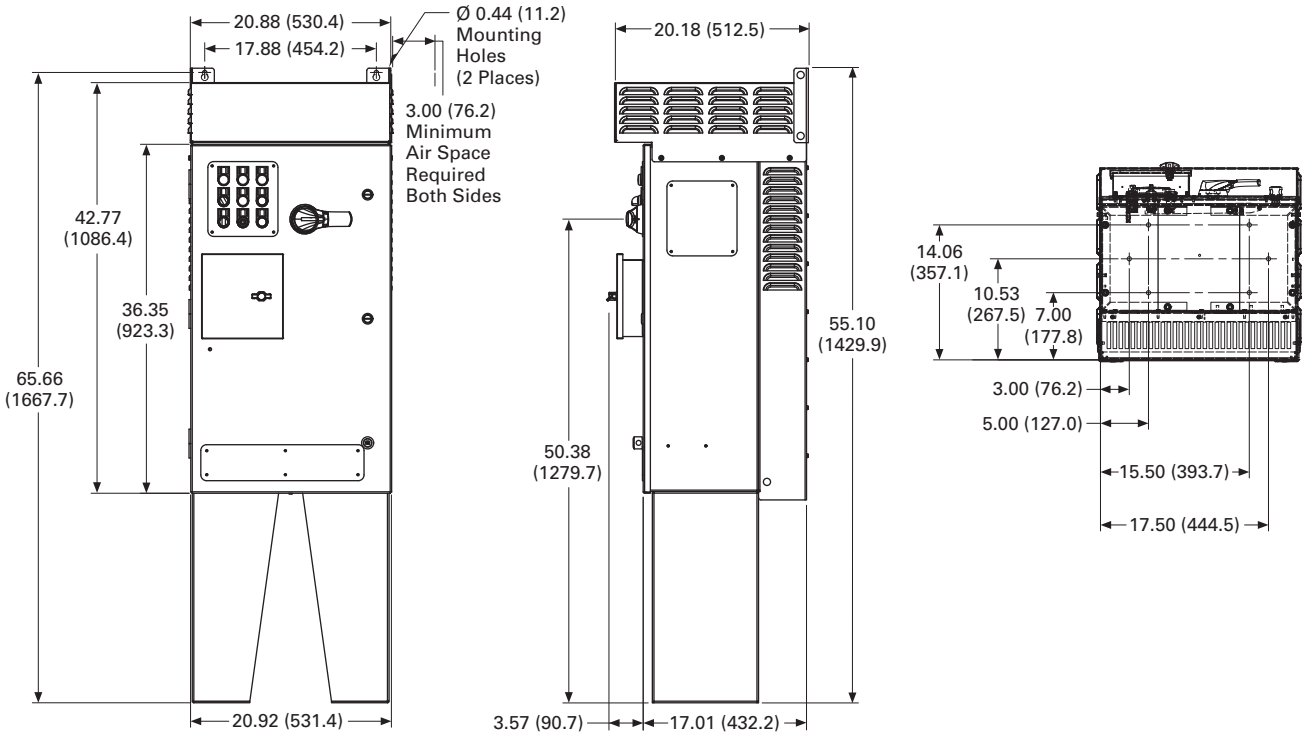

CX Box Type 1

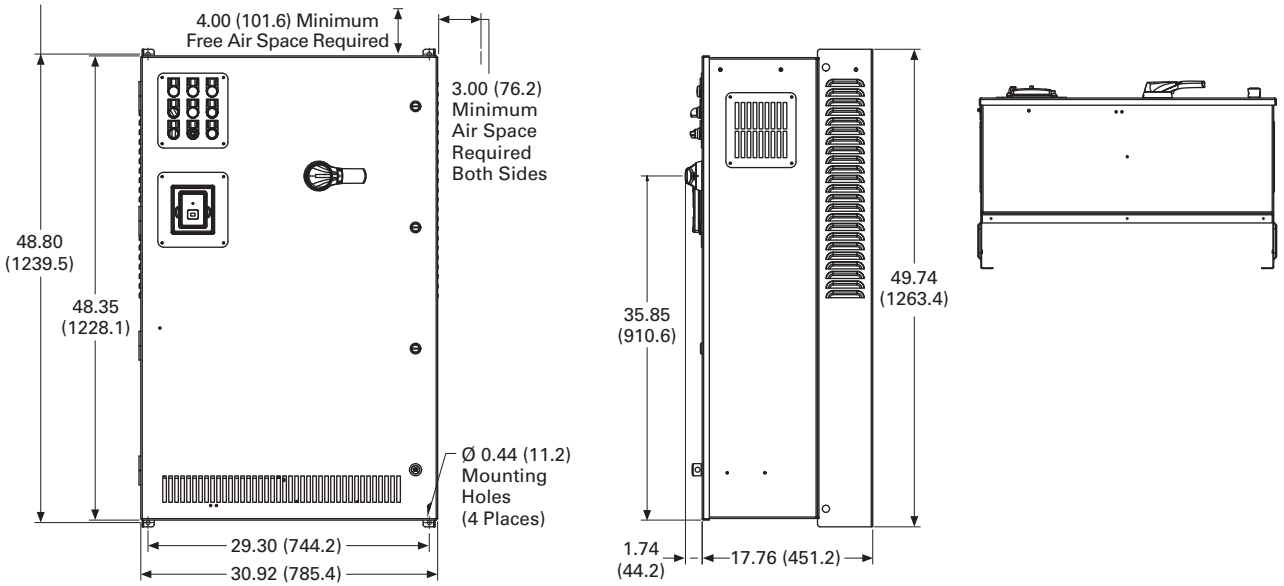

Approximate Dimensions in Inches (mm)

CX Box Type 1—12 Inch Floor Stands

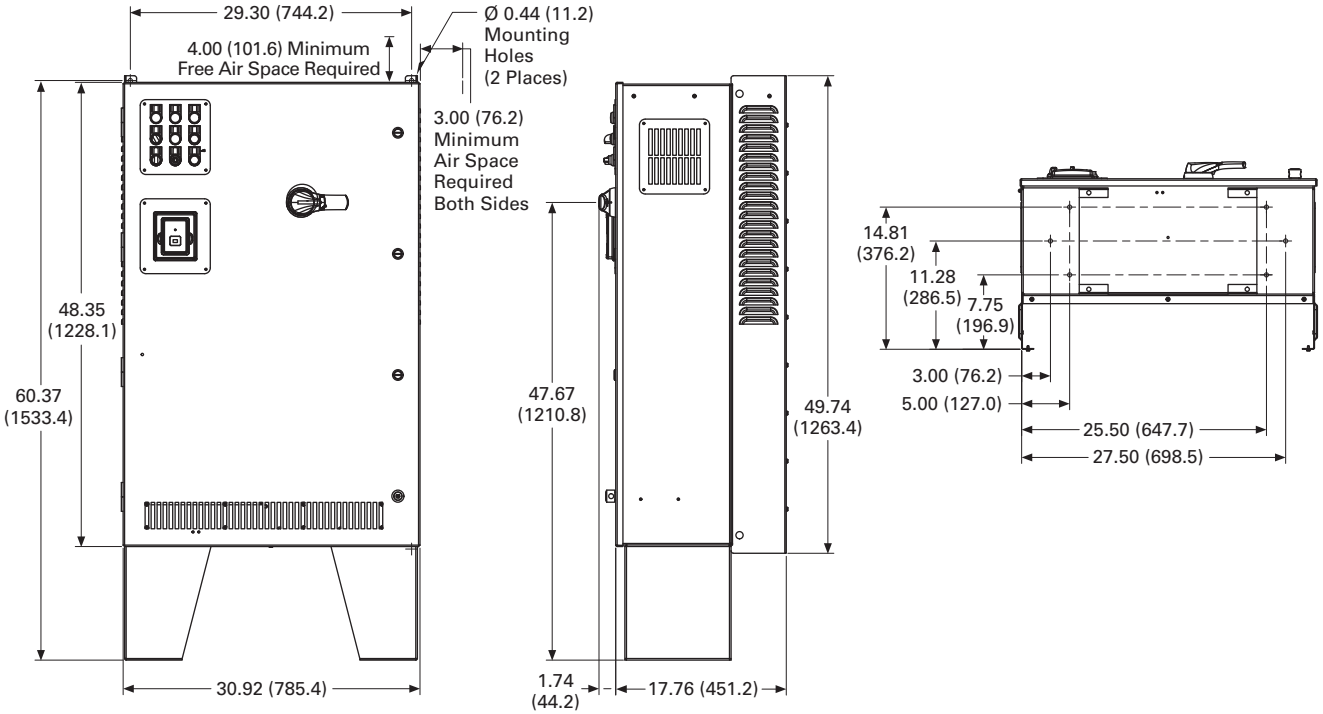

CX Box Type 1—22 Inch Floor Stands

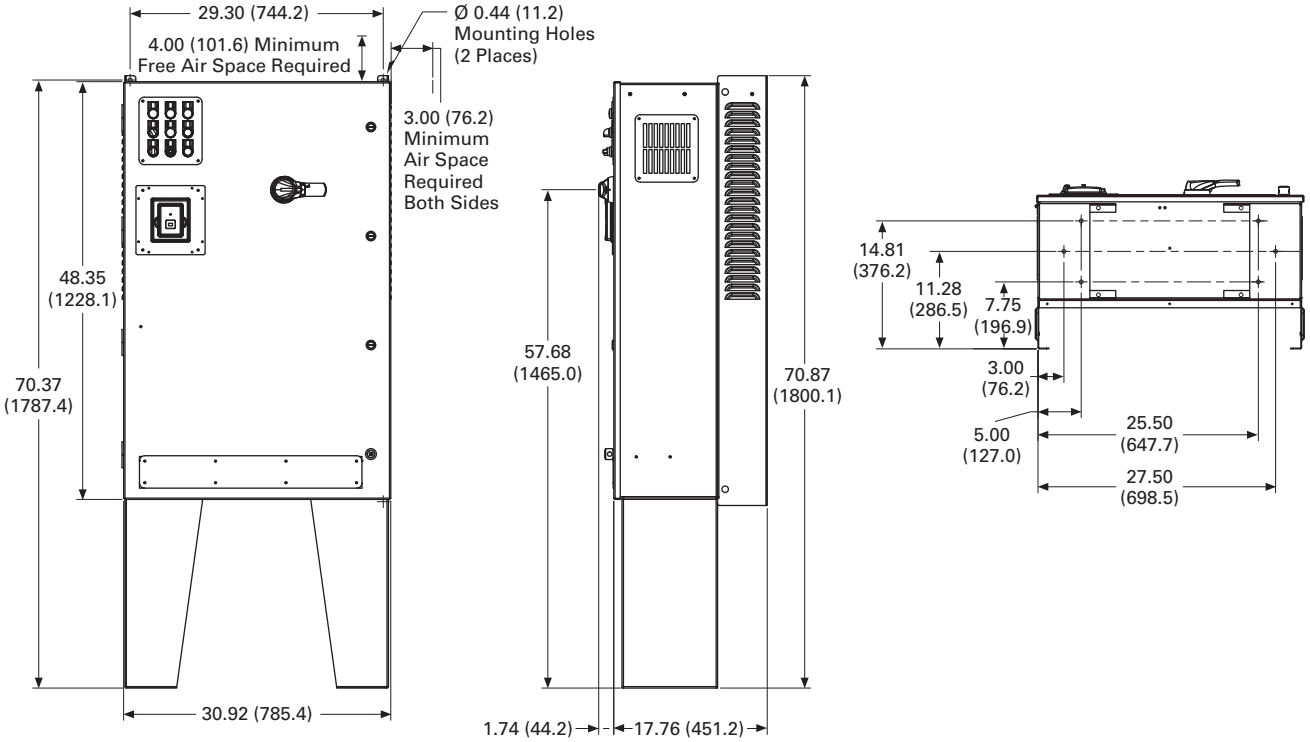

Approximate Dimensions in Inches (mm)

CX Box Type 12

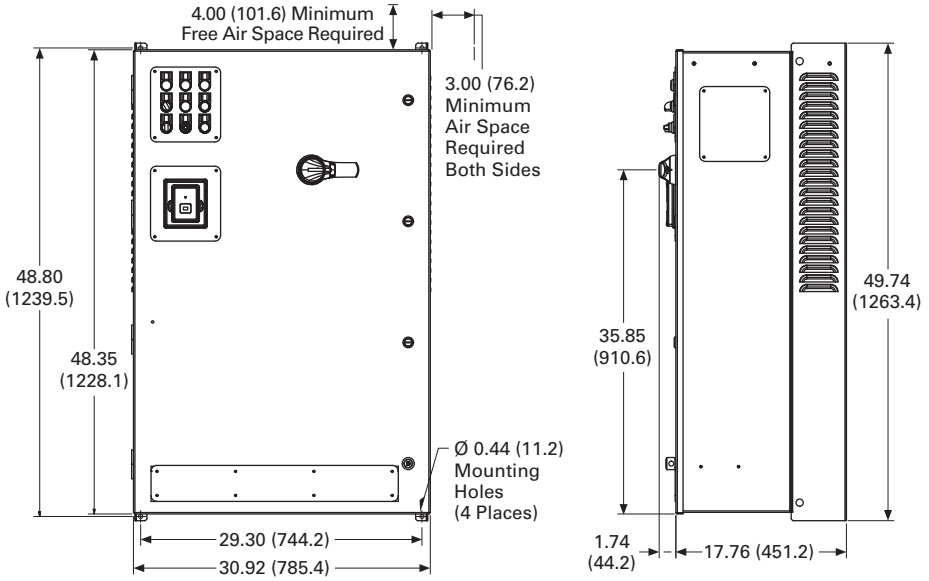

CX Box Type 12—12 Inch Floor Stands

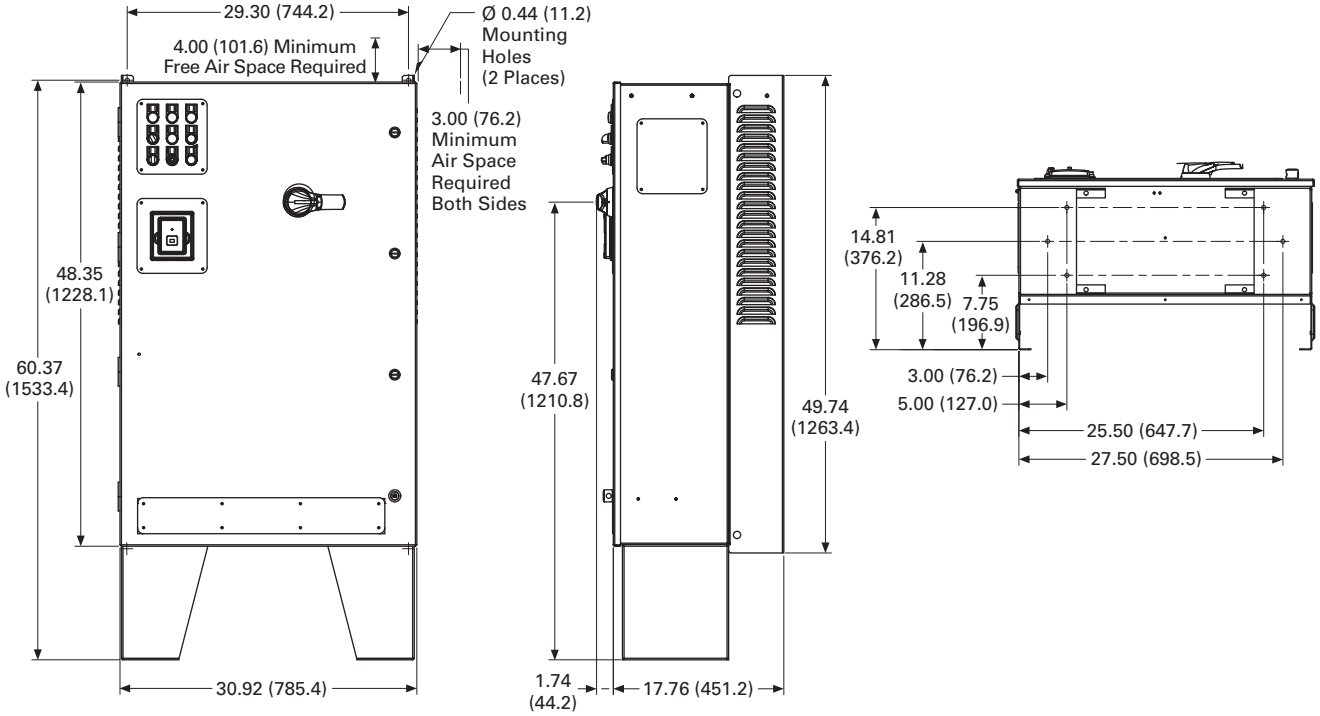

Approximate Dimensions in Inches (mm)

CX Box Type 12—22 Inch Floor Stands

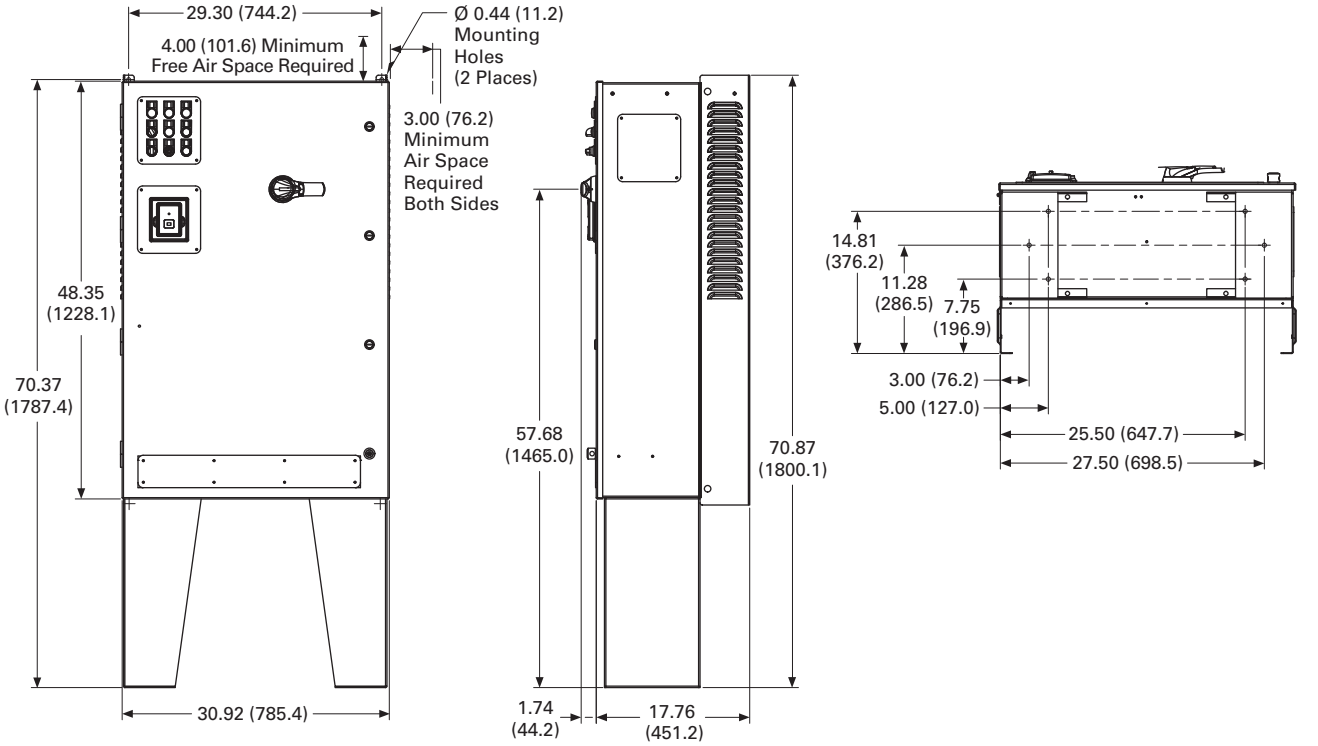

CX Box Type 3R

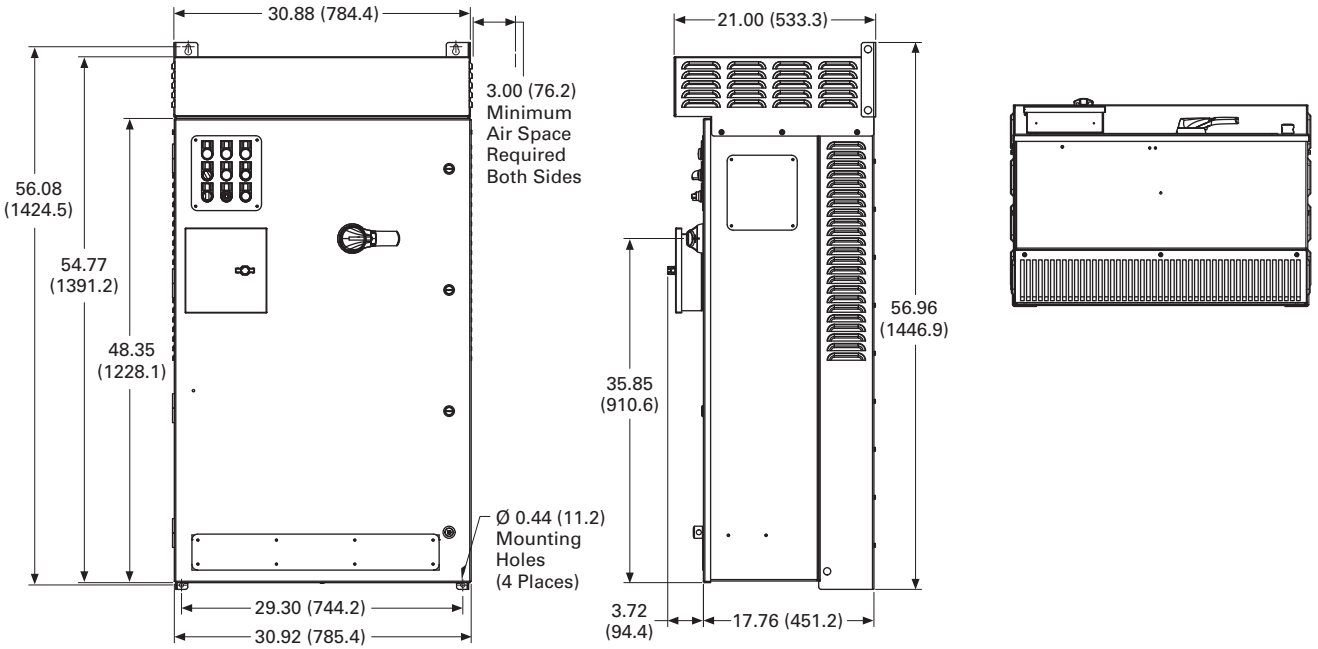

Approximate Dimensions in Inches (mm)

CX Box Type 3R—12 Inch Floor Stands

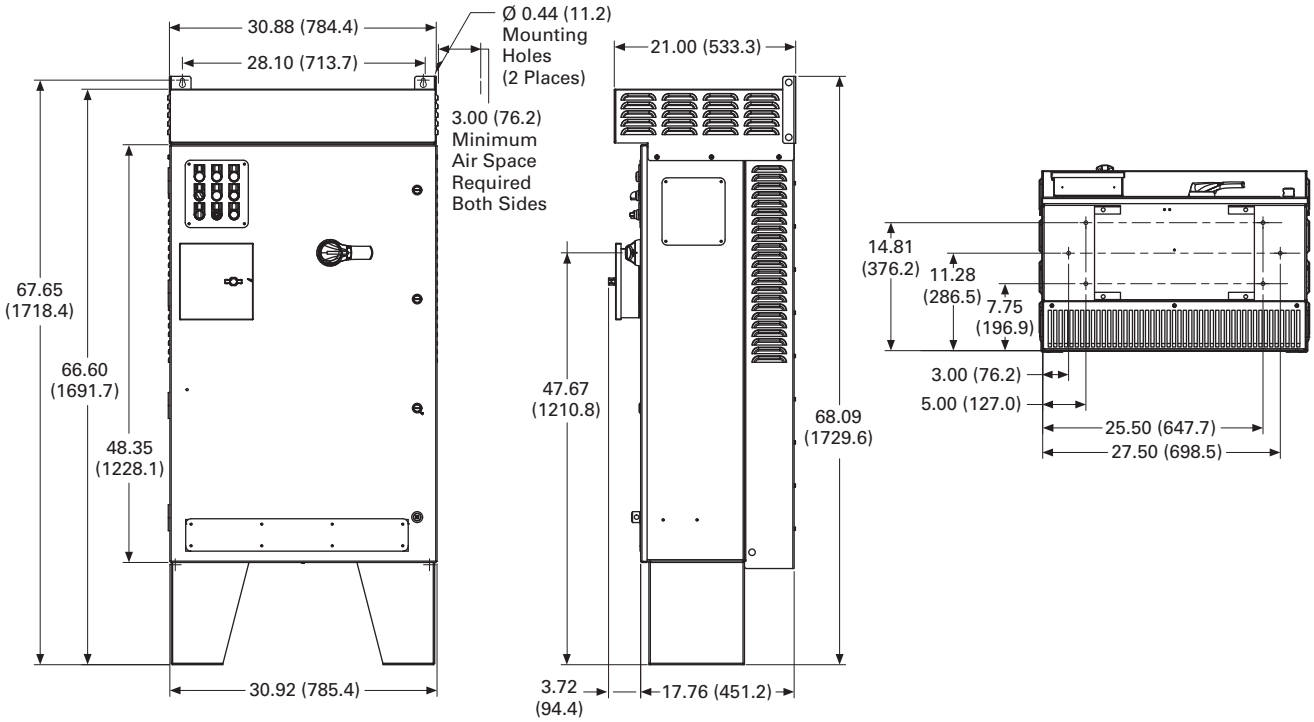

CX Box Type 3R—22 Inch Floor Stands

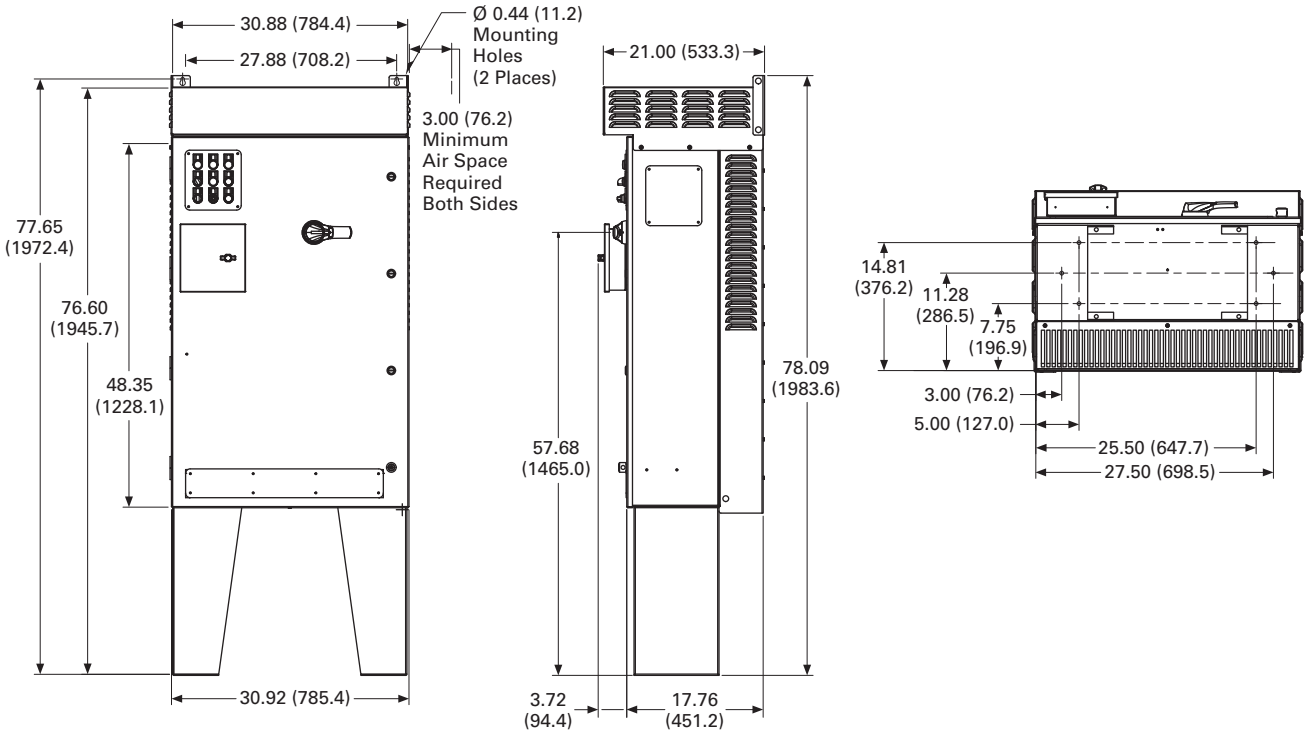

Approximate Dimensions in Inches (mm)

DX Box Type 1

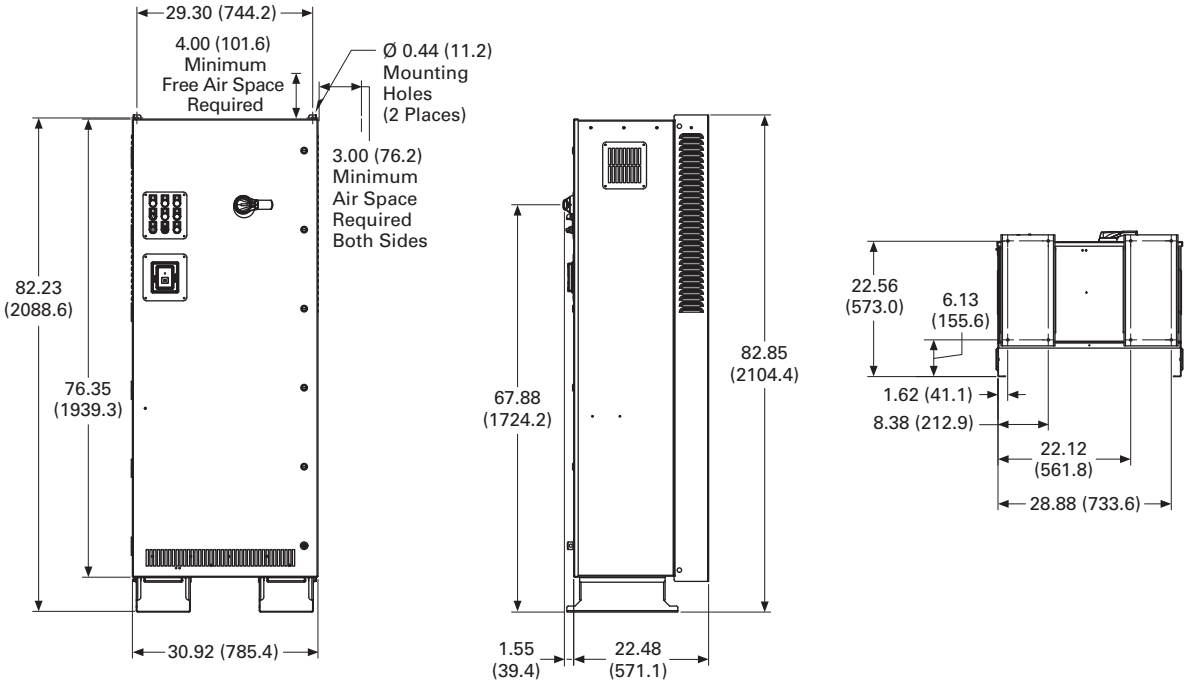

DX Box Type 12

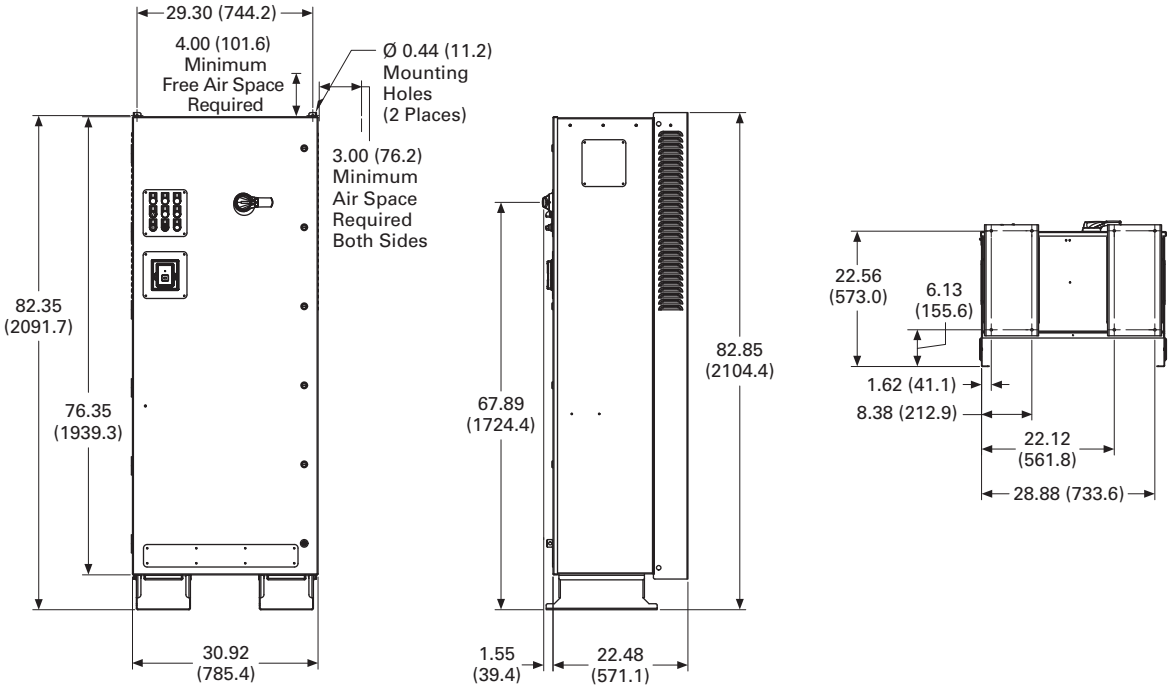

Approximate Dimensions in Inches (mm)

DX Box Type 3R

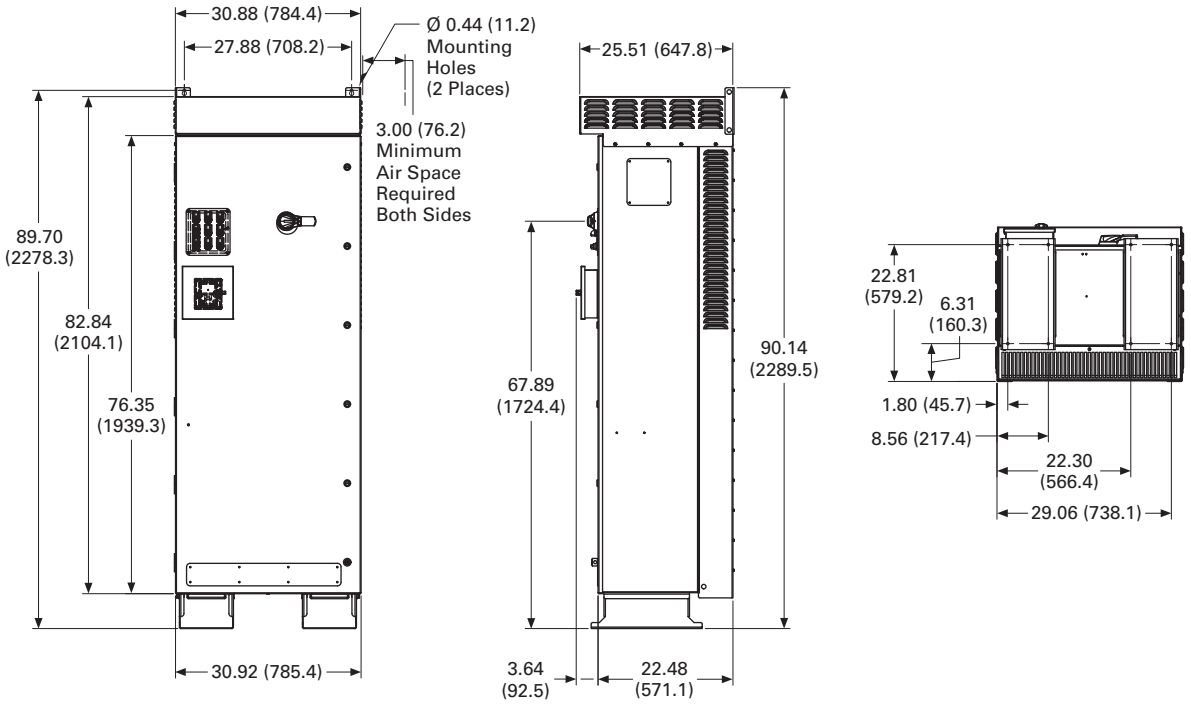

Approximate Dimensions in Inches (mm)

Size 8

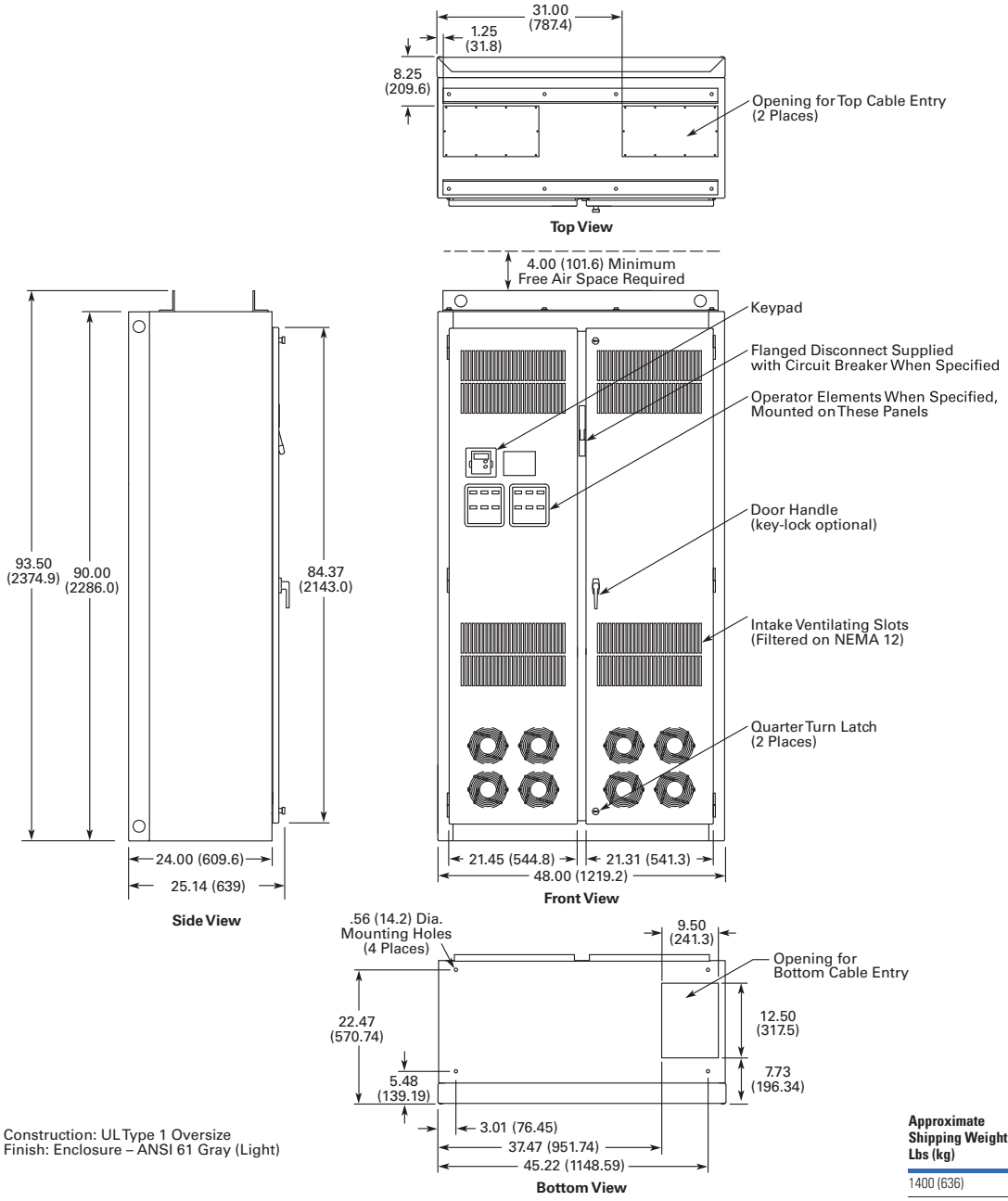

Construction: UL Type 1 Oversize
Finish: Enclosure – ANSI 61 Gray (Light)

Approximate Shipping Weight Lbs (kg)
1400 (636)

For reference only, dimensions are subject to change. See **Page V6-T2-276**, notes 3 and 5 for enclosure and option selection.

Wide	High	Deep	Mounting							Door Height	Min. Air Space	
A	B	C	D	D1	E	E1	F	G	G1	H	J	K
48.0 (1219)	90.0 (2286)	24.0 (610)	42.2 (1072)	3.0 (77)	—	—	—	5.5 (139)	—	84.4 (2143)	4.0 (102)	—

Cable Entry															Max. Approx. Shipping Weight Lbs (kg)
L	M	N	P	R	S	T	U	V	W	RR	SS	TT	UU	VV	
9.5 (241)	37.5 (952)	12.5 (318)	7.7 (196)	8.3 (210)	1.3 (32)	31.0 (787)	21.5 (545)	21.3 (541)	—	93.5 (2375)	—	—	—	—	2000 (908)

Approximate Dimensions in Inches (mm)

Size 9

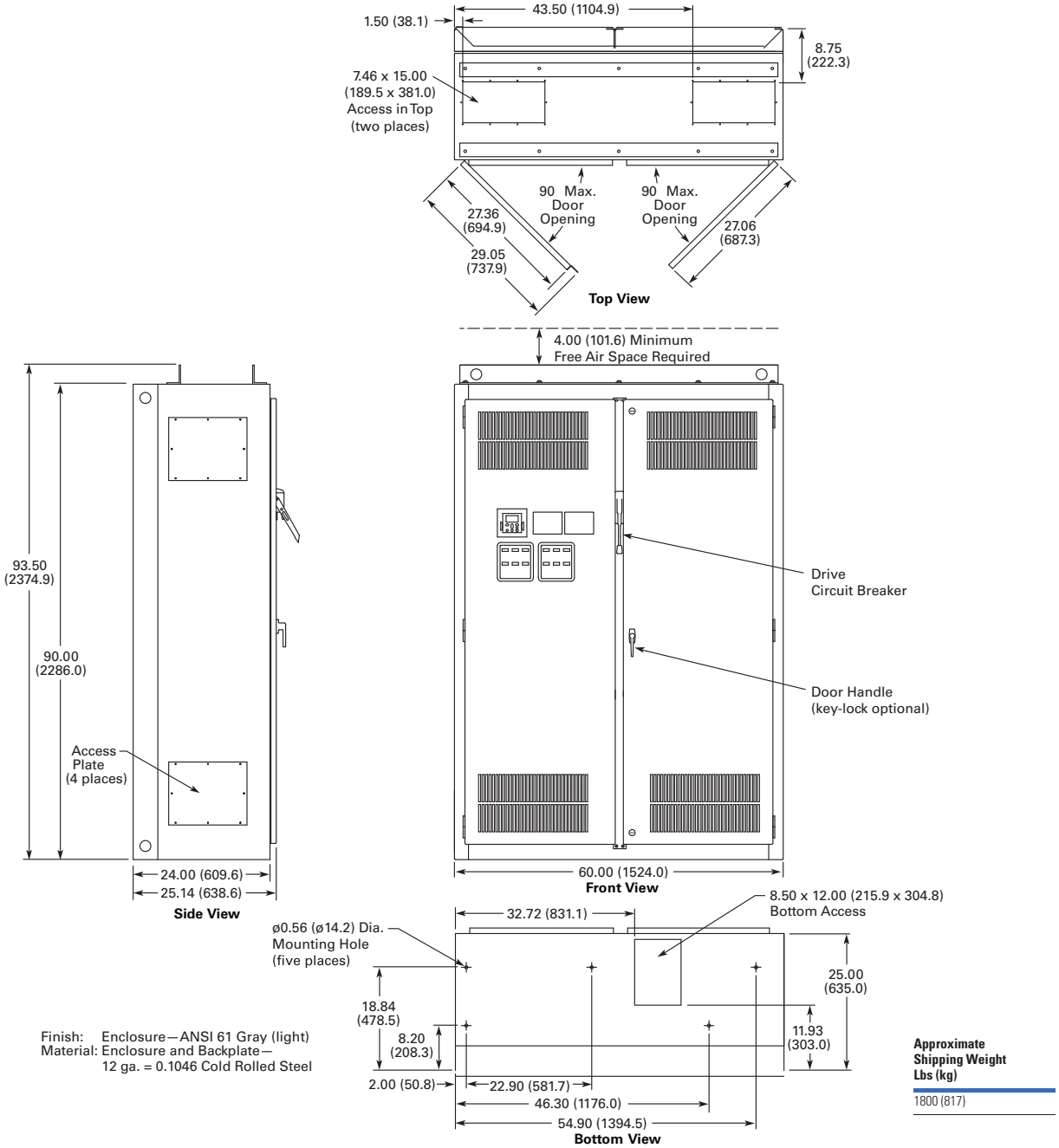

Finish: Enclosure—ANSI 61 Gray (light)
Material: Enclosure and Backplate—
12 ga. = 0.1046 Cold Rolled Steel

Approximate Shipping Weight Lbs (kg)
1800 (817)

For reference only, dimensions are subject to change. See **Page V6-T2-276**, notes 3 and 5 for enclosure and option selection.

Wide	High	Deep	Mounting							Door Height	Min. Air Space	
A	B	C	D	D1	E	E1	F	G	G1	H	J	K
60.0 (1524)	90.0 (2286)	260.1 (664)	22.9 (582)	2.0 (51)	30.0 (762)	44.3 (1125)	10.6 (270)	10.6 (270)	8.2 (208)	—	4.0 (102)	—

Cable Entry															Max. Approx. Shipping Weight
L	M	N	P	R	S	T	U	V	W	RR	SS	TT	UU	VV	Lbs (kg)
8.5 (216)	32.7 (831)	12.0 (305)	11.9 (303)	9.8 (249)	1.5 (38)	43.5 (1105)	15.0 (381)	7.5 (191)	25.0 (635)	93.5 (2375)	27.4 (696)	290.1 (738)	270.1 (687)	—	2500 (1135)

Approximate Dimensions in Inches (mm)

Enclosure Size F

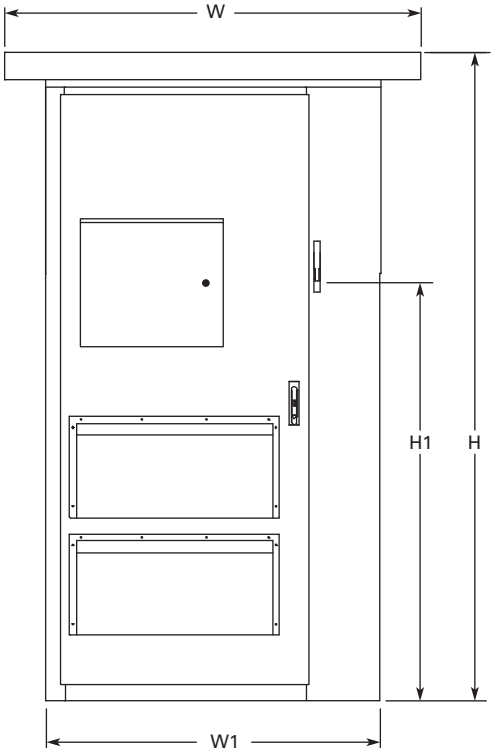

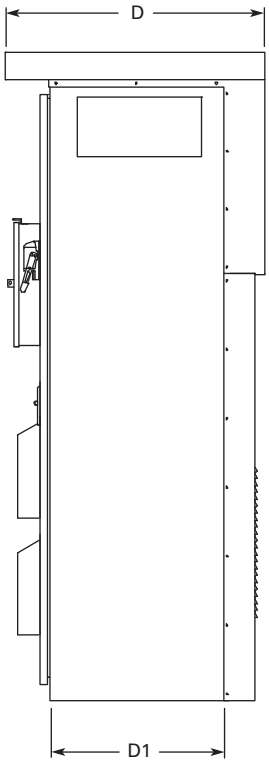

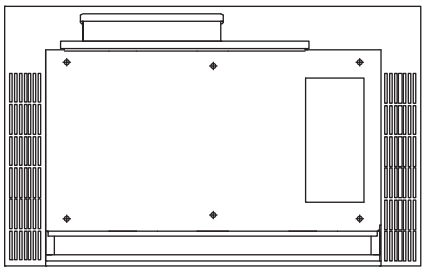

H	H1	W	W1	D	D1	Approximate Weight Lbs (kg)	Approximate Shipping Weight Lbs (kg)
93.58 (2376.9)	69.51 (1765.60)	60.00 (1524.0)	48.00 (1219.2)	37.50 (952.5)	26.00 (660.4)	1700 (771)	1850 (839)

Enclosed 12-Pulse Drives

Contents

Description	*Page*
Clean Power Drives Overview	**V6-T2-245**
Enclosed Passive Filtered Drives	
EGF Enclosed Drives	**V6-T2-252**
CFX Enclosed Drives	**V6-T2-272**
Enclosed 12-Pulse Drives	
Catalog Number Selection	**V6-T2-299**
Product Selection	**V6-T2-300**
Dimensions	**V6-T2-301**
Enclosed 18-Pulse Drives	**V6-T2-302**
Enclosed Regenerative Drives	**V6-T2-326**

HCX Enclosed 12-Pulse Drives

Product Description

The Enclosed HCX Drives is specifically tailored for HVAC applications where clean power is necessary. The Enclosed HCX Drive uses Eaton's SVX drive with a 12-pulse phase shifting transformer to deliver a substantial reduction in voltage and current harmonics.

Standards and Certifications

- UL 508C

Catalog Number Selection

HCX Enclosed 12-Pulse Drives

HCX 007 1 2 B A

Product Family
HCX = Enclosed 12-pulse drive

Horsepower Rating
007 = 7.5 hp
010 = 10 hp
015 = 15 hp
020 = 20 hp
025 = 25 hp
030 = 30 hp
040 = 40 hp
050 = 50 hp
060 = 60 hp
075 = 75 hp
100 = 100 hp
125 = 125 hp

Enclosure Rating
1 = Type 1
6 = Type 1 filtered

Voltage Rating
1 = 208 V
2 = 230 V
4 = 480 V

Application—Torque/Braking
A = I_L/No brake chopper
B = I_L/Internal brake chopper

Enclosure Style
A = Enclosed drive

Product Selection

208 V Drives

HCX Enclosed Drives

208 V Drives—Variable Torque (VT)/Low Overload (I_L) Enclosed Drives

hp	Current (A)	Drive Frame Size	NEMA Type 1 Base Catalog Number ①	NEMA Type 1 Filtered Base Catalog Number ①
7.5	24.2	5	**HCX00711BA**	**HCX00761BA**
10	30.8	5	**HCX01011BA**	**HCX01061BA**
15	46.2	6	**HCX01511BA**	**HCX01561BA**
20	59.4	6	**HCX02011BA**	**HCX02061BA**
25	74.8	7	**HCX02511AA**	**HCX02561AA**
30	88	7	**HCX03011AA**	**HCX03061AA**
40	114	7	**HCX04011AA**	**HCX04061AA**
50	143	8	**HCX05011AA**	**HCX05061AA**
60	169	8	**HCX06011AA**	**HCX06061AA**

230 V Drives

HCX Enclosed Drives

230 V Drives—Variable Torque (VT)/Low Overload (I_L) Enclosed Drives

hp	Current (A)	Drive Frame Size	NEMA Type 1 Base Catalog Number ①	NEMA Type 1 Filtered Base Catalog Number ①
7.5	22	5	**HCX00712BA**	**HCX00762BA**
10	28	5	**HCX01012BA**	**HCX01062BA**
15	42	6	**HCX01512BA**	**HCX01562BA**
20	54	6	**HCX02012BA**	**HCX02062BA**
25	68	7	**HCX02512AA**	**HCX02562AA**
30	80	7	**HCX03012AA**	**HCX03062AA**
40	104	7	**HCX04012AA**	**HCX04062AA**
50	130	8	**HCX05012AA**	**HCX05062AA**
60	154	8	**HCX06012AA**	**HCX06062AA**

480 V Drives

HCX Enclosed Drives

480 V Drives—Variable Torque (VT)/Low Overload (I_L) Enclosed Drives

hp	Current (A)	Drive Frame Size	NEMA Type 1 Base Catalog Number ①	NEMA Type 1 Filtered Base Catalog Number ①
25	34	6	**HCX02514BA**	**HCX02564BA**
30	40	6	**HCX03014BA**	**HCX03064BA**
40	52	6	**HCX04014BA**	**HCX04064BA**
50	65	7	**HCX05014AA**	**HCX05064AA**
60	77	7	**HCX06014AA**	**HCX06064AA**
75	96	7	**HCX07514AA**	**HCX07564AA**
100	124	8	**HCX10014AA**	**HCX10064AA**
125	156	8	**HCX12514AA**	**HCX12564AA**

Note

① Table is for base catalog number reference only. For complete catalog number selection, see **Page V6-T2-299**.

Dimensions

Approximate Dimensions in Inches (mm)

Enclosure Size 7

25–150 hp I_L and 25–125 hp I_H 480 V—25–100 hp I_L and 25–75 hp I_H 575 V

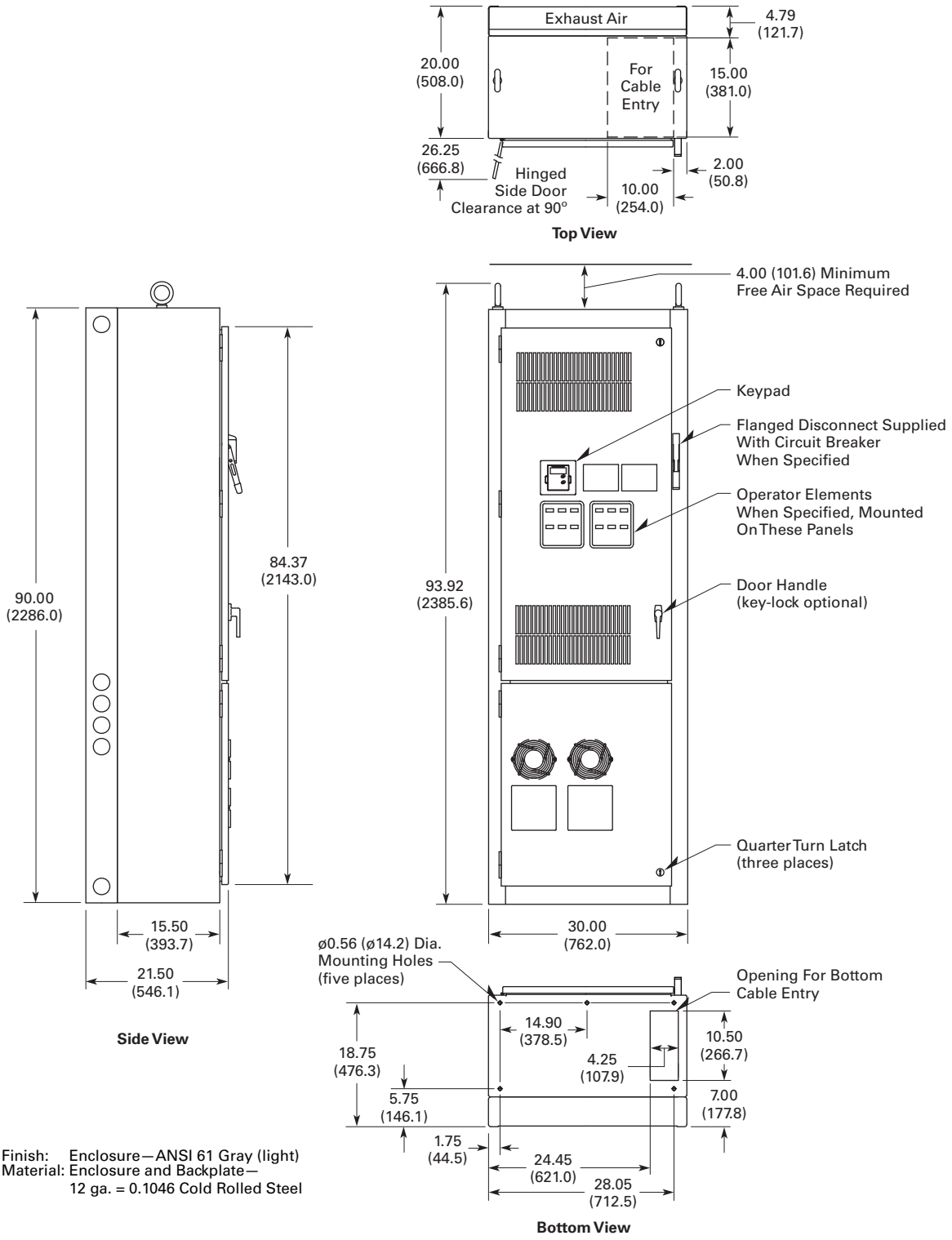

Finish: Enclosure—ANSI 61 Gray (light)
Material: Enclosure and Backplate—
12 ga. = 0.1046 Cold Rolled Steel

Enclosed 18-Pulse Drives

Contents

Description	*Page*
Enclosed Passive Filtered Drives	**V6-T2-251**
Enclosed 18-Pulse Drives	
Catalog Number Selection	**V6-T2-304**
Product Selection	**V6-T2-305**
Options	**V6-T2-313**
Technical Data and Specifications	**V6-T2-318**
Wiring Diagrams	**V6-T2-320**
Dimensions	**V6-T2-321**

CPX Enclosed 18-Pulse Drives

Product Description

Eaton's enclosed 18-pulse drives use advanced 18-pulse technology that significantly reduces line harmonics at the drive input terminals, resulting in one of the purest sinusoidal waveforms available.

The enclosed 18-pulse drive also delivers True Power Factor—in addition to reducing harmonic distortion, the enclosed 18-pulse drive prevents upstream transformer overheating and overloading of breakers and feeders, enabling the application of adjustable frequency drives on generators and other high impedance power systems.

Features and Benefits

Enclosed 18-pulse drive features include:

- Space optimized enclosure
- Simple layout for power options
- NEMA Type 1, Type 1 filtered and gasketed, Type 3R
- Input voltage: 480 V, 208 V, 575 V
- Complete range of control, network and power options
- Horsepower range:
  - 480 V, 25–800 hp (consult factory for larger sizes)
  - 208/230 V, 25–200 hp
  - 575 V, 25–800 hp (consult factory for larger sizes)
- Over 15 years of 18-pulse clean power experience
- 65 kAIC Standard at 480 V and 208 V
- 100 kAIC optional

Standards and Certifications

UL 508C

Product Identification

Type 1, 25–150 hp (30 x 90 x 21.50)

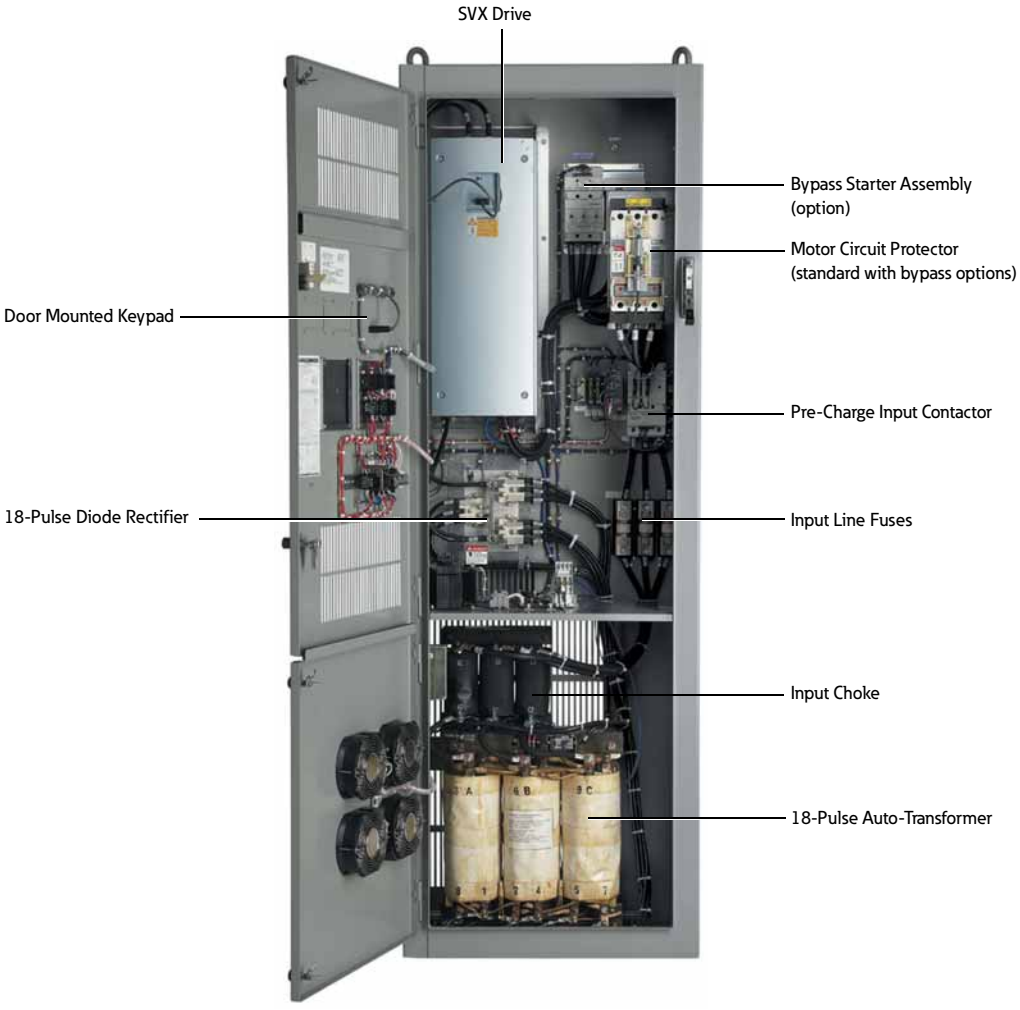

Catalog Number Selection

Enclosed 18-Pulse Drive

2

C P X 1 0 0 1 4 A A

Product Family

CPX = Clean power 18-pulse enclosed drives

Horsepower Rating

025 = 25 hp	**100** = 100 hp	**350** = 350 hp
030 = 30 hp	**125** = 125 hp	**400** = 400 hp
040 = 40 hp	**150** = 150 hp	**500** = 500 hp
050 = 50 hp	**200** = 200 hp	**600** = 600 hp
060 = 60 hp	**250** = 250 hp	**700** = 700 hp
075 = 75 hp	**300** = 300 hp	**800** = 800 hp

Enclosure Rating

1 = Type 1
3 = Type 3R
6 = Type 1 filtered and gasketed

Voltage Rating

2 = 230 V (208–240 V)
4 = 480 V
5 = 575 V (575–600 V)

Application—Torque/Braking ①

A = I_L/no brake chopper
B = I_L/internal brake chopper
D = I_H/no brake chopper
E = I_H/internal brake chopper

Enclosed Style

A = Enclosed drive

Build options alphabetically and numerically.

Enclosed Options ②③④		Type
K1	Door-mounted speed potentiometer ⑤	Control
K2	Door-mounted speed potentiometer with HOA selector switch ⑤	Control
K4	HAND/OFF/AUTO switch 0.87-inch (22 mm)	Control
K5	MANUAL/AUTO reference switch 0.87-inch (22 mm)	Control
K6	START/STOP pushbuttons 0.87-inch (22 mm)	Control
KF	Bypass test switch for RA	Addl. bypass
KO	Standard elapsed time meter	Control
L1	Power, RUN and fault pilot lights	Light
L2	Bypass pilot lights for RA, RB, bypass options	Addl. bypass
LE	Red RUN light	Light
P1	Input disconnect	Input
P8	Surge protective device	Input
PE	Output contactor	Output
PF	Output filter	Output
PG	MotoRx (up to 600 ft [182.9 m]) 1000 V/µS dV/dt filter	Output
PH	Single overload relay	Output
PI	Dual overload relays	Output
PN	Dual overloads for bypass	Addl. bypass
RA	Manual HOA bypass controller	Bypass
RC	Auto transfer HOA bypass controller	Bypass
RG	Reduced voltage starter for bypass	Bypass
S7	10.00-inch (254.0 mm) expansion	Enclosure
S8	20.00-inch (508.0 mm) expansion	Enclosure
S9	Space heater	Enclosure

Communication Options ⑥

C2 = Modbus®	**CA** = Johnson Controls N2
C3 = PROFIBUS® DP	**CI** = Modbus TCP
C4 = LonWorks®	**CJ** = BACnet
C5 = PROFIBUS DP (D9 connector)	**CQ** = EtherNet/IP
C6 = CANopen (slave)	**D3** = RS-232 with D9 connection
C7 = DeviceNet™	
C8 = Modbus (D9 Type connector)	

Control Options

B1 = 6 DI, 1 ext +24 Vdc/ext +24 Vdc
B2 = 1 RO (NC/NO), 1 RO (NO), 1 therm
B4 = 1 AI (mA isolated), 2 AO (mA isolated), 1 ext +24 Vdc/EXT +24 Vdc
B5 = 3 RO (NO)
B8 = 1 ext +24 Vdc/ext +24 Vdc, 3 Pt100
B9 = 1 RO (NO), 5 DI 42–240 Vac input

Engineered Options

VB	Varnished boards

Notes

① Brake chopper is standard in drives up to 30 hp I_H or 40 hp I_L at 480 V. It is optional in larger drives.
② Local/remote keypad is included as the standard control panel.
③ Some options are voltage and/or horsepower specific. Consult your Eaton representative for details.
④ See **Pages V6-T2-315** and **V6-T2-316** for complete descriptions.
⑤ Includes local/remote speed reference switch.
⑥ See **Pages V6-T2-313** and **V6-T2-314** for complete descriptions.

Product Selection

When Ordering

- Select a base catalog number that meets the application requirements—nominal horsepower, voltage and enclosure rating. (The enclosed drive's continuous output amp rating should be equal to or greater than the motor's full load amp rating.) The base-enclosed package includes a standard drive, door-mounted alphanumeric panel and enclosure.

Ambient Temperature Ratings

Frame Size	I_H	I_L
FR4–FR9	50 °C	50 °C
FR10 and above	40 °C	40 °C

- If dynamic brake chopper or control/communication option is desired, change the appropriate code in the base catalog number.
- All of the programming is exactly the same as the standard SVX drive.
- Select enclosed options. Add the codes as suffixes to the base catalog number in alphabetical and numeric order.

208/230 V Drives

Enclosed 18-Pulse Drive

Enclosed 18-Pulse Base Drive Type 1

Enclosure Size ①	hp ②	Current (A)	Chassis Frame	Base Catalog Number ③
Low Overload Drive				
7	25	68	FR7	**CPX02512AA**
	30	80	FR7	**CPX03012AA**
	40	104	FR7	**CPX04012AA**
	50	130	FR8	**CPX05012AA**
	60	154	FR8	**CPX06012AA**
	75	192	FR8	**CPX07512AA**
8	100	248	FR9	**CPX10012AA**
9	125	312	FR8T	**CPX12512AA**
	150	360	FR8T	**CPX15012AA**
10	200	480	FR9T	**CPX20012AA**
High Overload Drive				
7	25	68	FR7	**CPX02512DA**
	30	80	FR7	**CPX03012DA**
	40	104	FR8	**CPX04012DA**
	50	130	FR8	**CPX05012DA**
	60	154	FR8	**CPX06012DA**
8	75	192	FR9	**CPX07512DA**
9	100	248	FR8T	**CPX10012DA**
	125	312	FR8T	**CPX12512DA**
10	150	360	FR9T	**CPX15012DA**
	200	480	FR9T	**CPX20012DA**

Notes

① See enclosure dimensions beginning on **Page V6-T2-321**.
② hp ratings are provided as a guideline. Drives should be sized per motor nameplate FLA.
③ The 18-pulse clean power assembly includes a standard drive, door-mounted local/remote keypad and enclosure.

Enclosed 18-Pulse Drive

Enclosed 18-Pulse Base Drive NEMA 12 Filtered

Enclosure Size ①	hp ②	Current (A)	Chassis Frame	Base Catalog Number ③
Low Overload Drive				
7	25	68	FR7	**CPX02562AA**
	30	80	FR7	**CPX03062AA**
	40	104	FR7	**CPX04062AA**
	50	130	FR8	**CPX05062AA**
	60	154	FR8	**CPX06062AA**
	75	192	FR8	**CPX07562AA**
8	100	248	FR9	**CPX10062AA**
9	125	312	FR8T	**CPX12562AA**
	150	360	FR8T	**CPX15052AA**
10	200	480	FR9T	**CPX20062AA**
High Overload Drive				
7	25	68	FR7	**CPX02562DA**
	30	80	FR7	**CPX03062DA**
	40	104	FR8	**CPX04062DA**
	50	130	FR8	**CPX05062DA**
	60	154	FR8	**CPX06062DA**
8	75	192	FR9	**CPX07562DA**
9	100	248	FR8T	**CPX10062DA**
	125	312	FR8T	**CPX12562DA**
10	150	360	FR9T	**CPX15062DA**
	200	480	FR9T	**CPX20062DA**

Enclosed 18-Pulse Base Drive Type 3R ④

Enclosure Size ①	hp ②	Current (A)	Chassis Frame	Base Catalog Number ③
Low Overload Drive				
7	25	68	FR7	**CPX02532AA**
	30	80	FR7	**CPX03032AA**
	40	104	FR7	**CPX04032AA**
	50	130	FR8	**CPX05032AA**
	60	154	FR8	**CPX06032AA**
	75	192	FR8	**CPX07532AA**
8	100	248	FR9	**CPX10032AA**
9	125	312	FR8T	**CPX12532AA**
High Overload Drive				
7	25	68	FR7	**CPX02532DA**
	30	80	FR7	**CPX03032DA**
	40	104	FR8	**CPX04032DA**
	50	130	FR8	**CPX05032DA**
	60	154	FR8	**CPX06032DA**
8	75	192	FR9	**CPX07532DA**
9	100	248	FR8T	**CPX10032DA**

Notes

① See enclosure dimensions beginning on **Page V6-T2-321**.
② hp ratings are provided as a guideline. Drives should be sized per motor nameplate FLA.
③ The 18-pulse clean power assembly includes a standard drive, door-mounted local/remote keypad and enclosure.
④ All Type 3R drives use the Size F enclosure.

480 V Drives

Enclosed 18-Pulse Drive

Enclosed 18-Pulse Base Drive Type 1

Enclosure Size ①	hp ②	Current (A)	Chassis Frame	Base Catalog Number ③
Low Overload Drive				
7	25	34	FR6	**CPX02514BA**
	30	40	FR6	**CPX03014BA**
	40	52	FR6	**CPX04014BA**
	50	65	FR7	**CPX05014AA**
	60	77	FR7	**CPX06014AA**
	75	96	FR7	**CPX07514AA**
	100	124	FR8	**CPX10014AA**
	125	156	FR8	**CPX12514AA**
	150	180	FR8	**CPX15014AA**
8	200	240	FR9	**CPX20014AA**
	250	302	FR9	**CPX25014AA**
9	300	361	FR10	**CPX30014AA**
	350	414	FR10	**CPX35014AA**
	400	477	FR10	**CPX40014AA**
10	500	590	FR11	**CPX50014AA**
	550	650	FR11	**CPX55014AA**
	600	730	FR11	**CPX60014AA**
11	650	820	FR12	**CPX65014AA**
	700	920	FR12	**CPX70014AA**
	800	1030	FR12	**CPX80014AA**
High Overload Drive				
7	25	34	FR6	**CPX02514EA**
	30	40	FR6	**CPX03014EA**
	40	52	FR7	**CPX04014DA**
	50	65	FR7	**CPX05014DA**
	60	77	FR7	**CPX06014DA**
	75	96	FR8	**CPX07514DA**
	100	124	FR8	**CPX10014DA**
	125	156	FR8	**CPX12514DA**
8	150	240	FR9	**CPX15014DA**
	200	302	FR9	**CPX20014DA**
9	250	361	FR10	**CPX25014DA**
	300	414	FR10	**CPX30014DA**
	350	477	FR10	**CPX35014DA**
10	400	590	FR11	**CPX40014DA**
	500	650	FR11	**CPX50014DA**
	550	730	FR11	**CPX55014DA**
11	600	820	FR12	**CPX60014DA**
	650	920	FR12	**CPX65014DA**
	700	1030	FR12	**CPX70014DA**

Notes

① See enclosure dimensions beginning on **Page V6-T2-321**.

② hp ratings are provided as a guideline. Drives should be sized per motor nameplate FLA.

③ The 18-pulse clean power assembly includes a standard drive, door-mounted local/remote keypad and enclosure.

Enclosed 18-Pulse Drive

Enclosed 18-Pulse Base Drive NEMA 12 Filtered

Enclosure Size ①	hp ②	Current (A)	Chassis Frame	Base Catalog Number ③
Low Overload Drive				
7	25	34	FR6	**CPX02564BA**
	30	40	FR6	**CPX03064BA**
	40	52	FR6	**CPX04064BA**
	50	65	FR7	**CPX05064AA**
	60	77	FR7	**CPX06064AA**
	75	96	FR7	**CPX07564AA**
	100	124	FR8	**CPX10064AA**
	125	156	FR8	**CPX12564AA**
	150	180	FR8	**CPX15064AA**
8	200	240	FR9	**CPX20064AA**
	250	302	FR9	**CPX25064AA**
9	300	361	FR10	**CPX30064AA**
	350	414	FR10	**CPX35064AA**
	400	477	FR10	**CPX40064AA**
10	500	590	FR11	**CPX50064AA**
	550	650	FR11	**CPX55064AA**
	600	730	FR11	**CPX60064AA**
11	650	820	FR11	**CPX65064AA**
	700	920	FR12	**CPX70064AA**
	800	1030	FR12	**CPX80064AA**
High Overload Drive				
7	25	34	FR6	**CPX02564EA**
	30	40	FR6	**CPX03064EA**
	40	52	FR7	**CPX04064DA**
	50	65	FR7	**CPX05064DA**
	60	77	FR7	**CPX06064DA**
	75	96	FR8	**CPX07564DA**
	100	124	FR8	**CPX10064DA**
	125	156	FR8	**CPX12564DA**
8	150	240	FR9	**CPX15064DA**
	200	302	FR9	**CPX20064DA**
9	250	361	FR10	**CPX25064DA**
	300	414	FR10	**CPX30064DA**
	350	477	FR10	**CPX35014DA**
10	400	590	FR11	**CPX40064DA**
	500	650	FR11	**CPX50064DA**
	550	730	FR11	**CPX55064DA**
11	600	820	FR12	**CPX60064DA**
	650	920	FR12	**CPX65064DA**
	700	1030	FR12	**CPX70064DA**

Notes

① See enclosure dimensions beginning on **Page V6-T2-321**.
② hp ratings are provided as a guideline. Drives should be sized per motor nameplate FLA.
③ The 18-pulse clean power assembly includes a standard drive, door-mounted local/remote keypad and enclosure.

Enclosed 18-Pulse Drive

Enclosed 18-Pulse Base Drive Type 3R ①

Enclosure Size ②	hp ③	Current (A)	Chassis Frame	Base Catalog Number ④
Low Overload Drive				
7	25	34	FR6	**CPX02534AA**
	30	40	FR6	**CPX03034AA**
	40	52	FR6	**CPX04034AA**
	50	65	FR7	**CPX05034AA**
	60	77	FR7	**CPX06034AA**
	75	96	FR7	**CPX07534AA**
	100	124	FR8	**CPX10034AA**
	125	156	FR8	**CPX12534AA**
	150	180	FR8	**CPX15034AA**
8	200	240	FR9	**CPX20034AA**
	250	302	FR9	**CPX25034AA**
High Overload Drive				
7	25	34	FR6	**CPX02534DA**
	30	40	FR6	**CPX03034DA**
	40	52	FR7	**CPX04034DA**
	50	65	FR7	**CPX05034DA**
	60	77	FR7	**CPX06034DA**
	75	96	FR8	**CPX07534DA**
	100	124	FR8	**CPX10034DA**
	125	156	FR8	**CPX12534DA**
8	150	180	FR9	**CPX15034DA**
	200	240	FR9	**CPX20034DA**

Notes

① All Type 3R drives use the Size F enclosure.
② See enclosure dimensions beginning on **Page V6-T2-321**.
③ hp ratings are provided as a guideline. Drives should be sized per motor nameplate FLA.
④ The 18-pulse clean power assembly includes a standard drive, door-mounted local/remote keypad and enclosure.

575 V Drives

Enclosed 18-Pulse Drive

Enclosed 18-Pulse Base Drive Type 1

Enclosure Size ①	hp ②	Current (A)	Chassis Frame	Base Catalog Number ③
Low Overload Drive				
7	25	27	FR6	**CPX02515AA**
	30	32	FR6	**CPX03015AA**
	40	41	FR7	**CPX04015AA**
	50	52	FR7	**CPX05015AA**
	60	62	FR8	**CPX06015AA**
	75	77	FR8	**CPX07515AA**
	100	99	FR8	**CPX10015AA**
8	125	125	FR9	**CPX12515AA**
	150	144	FR9	**CPX15015AA**
	200	192	FR9	**CPX20015AA**
9	250	242	FR10	**CPX25015AA**
	300	289	FR10	**CPX30015AA**
	400	382	FR10	**CPX40015AA**
10	500	472	FR11	**CPX50015AA**
	600	730	FR11	**CPX60015AA**
11	650	820	FR12	**CPX65015AA**
	700	920	FR12	**CPX70015AA**
	800	1030	FR12	**CPX80015AA**
High Overload Drive				
7	25	27	FR6	**CPX02515DA**
	30	32	FR7	**CPX03015DA**
	40	41	FR7	**CPX04015DA**
	50	52	FR8	**CPX05015DA**
	60	62	FR8	**CPX06015DA**
	75	77	FR8	**CPX07515DA**
8	100	99	FR9	**CPX10015DA**
	125	125	FR9	**CPX12515DA**
	150	144	FR9	**CPX15015DA**
9	200	192	FR10	**CPX20015DA**
	250	242	FR10	**CPX25015DA**
	300	289	FR10	**CPX30015DA**
10	400	382	FR11	**CPX40015DA**
	450	472	FR11	**CPX45015DA**
	500	730	FR11	**CPX50015DA**
11	600	820	FR12	**CPX60015DA**
	650	920	FR12	**CPX65015DA**
	700	1030	FR12	**CPX70015DA**

Notes

① See enclosure dimensions beginning on **Page V6-T2-321**.
② hp ratings are provided as a guideline. Drives should be sized per motor nameplate FLA.
③ The 18-pulse clean power assembly includes a standard drive, door-mounted local/remote keypad and enclosure.

Enclosed 18-Pulse Drive

Enclosed 18-Pulse Base Drive NEMA 12 Filtered

Enclosure Size ①	hp ②	Current (A)	Chassis Frame	Base Catalog Number ③
Low Overload Drive				
7	25	27	FR6	**CPX02565AA**
	30	32	FR6	**CPX03065AA**
	40	41	FR7	**CPX04065AA**
	50	52	FR7	**CPX05065AA**
	60	62	FR8	**CPX06065AA**
	75	77	FR8	**CPX07565AA**
	100	99	FR8	**CPX10065AA**
8	125	125	FR9	**CPX12565AA**
	150	144	FR9	**CPX15065AA**
	200	192	FR9	**CPX20065AA**
9	250	242	FR10	**CPX25065AA**
	300	289	FR10	**CPX30065AA**
	400	382	FR10	**CPX40065AA**
10	500	472	FR11	**CPX50065AA**
	600	730	FR11	**CPX60065AA**
11	650	820	FR12	**CPX65065AA**
	700	920	FR12	**CPX70065AA**
	800	1030	FR12	**CPX80065AA**
High Overload Drive				
7	25	27	FR6	**CPX02565DA**
	30	32	FR7	**CPX03065DA**
	40	41	FR7	**CPX04065DA**
	50	52	FR8	**CPX05065DA**
	60	62	FR8	**CPX06065DA**
	75	77	FR8	**CPX07565DA**
8	100	99	FR9	**CPX10065DA**
	125	125	FR9	**CPX12565DA**
	150	144	FR9	**CPX15065DA**
9	200	192	FR10	**CPX20065DA**
	250	242	FR10	**CPX25065DA**
	300	289	FR10	**CPX30065DA**
10	400	382	FR11	**CPX40065DA**
	450	472	FR11	**CPX45065DA**
	500	730	FR11	**CPX50065DA**
11	600	820	FR12	**CPX60065DA**
	650	920	FR12	**CPX65065DA**
	700	1030	FR12	**CPX70065DA**

Notes

① See enclosure dimensions beginning on **Page V6-T2-321**.

② hp ratings are provided as a guideline. Drives should be sized per motor nameplate FLA.

③ The 18-pulse clean power assembly includes a standard drive, door-mounted local/remote keypad and enclosure.

Enclosed 18-Pulse Drive

Enclosed 18-Pulse Base Drive Type 3R ①

Enclosure Size ②	hp ③	Current (A)	Chassis Frame	Base Catalog Number ④
Low Overload Drive				
7	25	27	FR6	**CPX02535AA**
	30	32	FR6	**CPX03035AA**
	40	41	FR7	**CPX04035AA**
	50	52	FR7	**CPX05035AA**
	60	62	FR8	**CPX06035AA**
	75	77	FR8	**CPX07535AA**
	100	99	FR8	**CPX10035AA**
8	125	125	FR9	**CPX12535AA**
	150	144	FR9	**CPX15035AA**
	200	192	FR9	**CPX20035AA**
High Overload Drive				
7	25	27	FR6	**CPX02535DA**
	30	32	FR7	**CPX03035DA**
	40	41	FR7	**CPX04035DA**
	50	52	FR8	**CPX05035DA**
	60	62	FR8	**CPX06035DA**
	75	77	FR8	**CPX07535DA**
8	100	99	FR9	**CPX10035DA**
	125	125	FR9	**CPX12535DA**
	150	144	FR9	**CPX15035DA**

Notes

① All Type 3R drives use the Size F enclosure.
② See enclosure dimensions beginning on **Page V6-T2-321**.
③ hp ratings are provided as a guideline. Drives should be sized per motor nameplate FLA.
④ The 18-pulse clean power assembly includes a standard drive, door-mounted local/remote keypad and enclosure.

Options

Enclosed 18-Pulse Drive Option Board Kits

The enclosed 18-pulse drives can accommodate a wide selection of expander and adapter option boards to customize the drive for your application needs. The drive's control unit is designed to accept a total of five option boards (see figure below).

The enclosed 18-pulse drives factory-installed standard board configuration includes an A9 I/O board and an A2 relay output board, which are installed in slots A and B.

SVX Series Option Board Kits

Option Boards

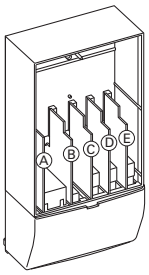

Option Board Kits

Option Kit Description ①	Allowed Slot Locations ②	Field Installed Catalog Number	Factory Installed Option Designator	SVX Ready Programs Basic	Local/ Remote	Standard	MSS	PID	Multi-P.	PFC
Standard I/O Cards										
2 RO (NC/NO)	B	**OPTA2**	—	■	■	■	■	■	■	■
6 DI, 1 DO, 2 AI, 1 AO, 1 +10 Vdc ref, 2 ext +24 Vdc/ext +24 Vdc	A	**OPTA9**	—	■	■	■	■	■	■	■
Extended I/O Cards										
6 DI	B, C, **D**, E	**OPTB1**	**B1**	—	—	—	—	—	■	■
1 RO (NC/NO), 1 RO (NO), 1 therm	B, C, **D**, E	**OPTB2**	**B2**	—	—	—	—	—	■	■
1 AI (mA isolated), 2 AO (mA isolated)	B, C, **D**, E	**OPTB4**	**B4**	■	■	■	■	■	■	■
3 RO (NO)	B, C, **D**, E	**OPTB5**	**B5**	—	—	—	—	—	■	■
3 Pt100 RTD board	B, C, **D**, E	**OPTB8**	**B8**	—	—	—	—	—	■	—
1 RO (NO), 5 DI 42–240 Vac input	B, C, **D**, E	**OPTB9**	**B9**	—	—	—	—	—	■	■
Communication Cards ③										
Modbus	D, **E**	**OPTC2**	**C2**	■	■	■	■	■	■	■
Modbus TCP	D, **E**	**OPTCI**	**CI**	■	■	■	■	■	■	■
BACnet	D, **E**	**OPTCJ**	**CJ**	■	■	■	■	■	■	■
EtherNet/IP	D, **E**	**OPTCQ**	**CQ**	■	■	■	■	■	■	■
Johnson Controls N2	D, **E**	**OPTC2**	**CA**	■	■	■	■	■	■	■
PROFIBUS DP	D, **E**	**OPTC3**	**C3**	■	■	■	■	■	■	■
LonWorks	D, **E**	**OPTC4**	**C4**	■	■	■	■	■	■	■
PROFIBUS DP (D9 connector)	D, **E**	**OPTC5**	**C5**	■	■	■	■	■	■	■
CANopen (slave)	D, **E**	**OPTC6**	**C6**	■	■	■	■	■	■	■
DeviceNet	D, **E**	**OPTC7**	**C7**	■	■	■	■	■	■	■
Modbus (D9 type connector)	D, **E**	**OPTC8**	**C8**	■	■	■	■	■	■	■
RS-232 with D9 connection	D, **E**	**OPTD3**	**D3**	■	■	■	■	■	■	■

Notes

① AI = Analog Input; AO = Analog Output, DI = Digital Input, DO = Digital Output, RO = Relay Output
② Option card must be installed in one of the slots listed for that card. Slot indicated in bold is the preferred location.
③ OPTC2 is a multi-protocol option card.

Modbus RTU Network Communications

The Modbus Network Card OPTC2 is used for connecting the SVX Drive as a slave on a Modbus network. The interface is connected by a 9-pin DSUB connector (female) and the baud rate ranges from 300 to 19,200 baud. Other communication parameters include an address range from 1 to 247; a parity of None, Odd or Even; and the stop bit is 1.

PROFIBUS Network Communications

The PROFIBUS Network Card OPTC3 is used for connecting the SVX Drive as a slave on a PROFIBUS-DP network. The interface is connected by a 9-pin DSUB connector (female). The baud rates range from 9.6 Kbaud to 12 Mbaud, and the addresses range from 1 to 127.

LonWorks Network Communications

The LonWorks Network Card OPTC4 is used for connecting the SVX Drive on a LonWorks network. This interface uses Standard Network Variable Types (SNVT) as data types. The channel connection is achieved using a FTT-10 A Free Topology transceiver via a single twisted transfer cable. The communication speed with LonWorks is 78 kBits/s.

CANopen (Slave) Communications

The CANopen (Slave) Network Card OPTC6 is used for connecting the SVX Drive to a host system. According to ISO11898 standard cables to be chosen for CANbus should have a nominal impedance of 120 ohms, and specific line delay of nominal 5 nS/m. 120 ohm line termination resistors required for installation.

DeviceNet Network Communications

The DeviceNet Network Card OPTC7 is used for connecting the SVX Drive on a DeviceNet Network. It includes a 5.08 mm pluggable connector. Transfer method is via CAN using a two-wire twisted shielded cable with two-wire bus power cable and drain. The baud rates used for communication include 125 Kbaud, 250 Kbaud and 500 Kbaud.

Johnson Controls Metasys N2 Network Communications

The OPTC2 fieldbus board provides communication between the SVX Drive and a Johnson Controls Metasys™ N2 network. With this connection, the drive can be controlled, monitored and programmed from the Metasys system. The N2 fieldbus is available as a factory-installed option and as a field-installable kit.

Modbus/TCP Network Communications

The Modbus/TCP Network Card OPTCI is used for connecting the SVX Drive to Ethernet networks using Modbus protocol. It includes an RJ-45 pluggable connector. This interface provides a selection of standard and custom register values to communicate drive parameters. The board supports 10 Mbps and 100 Mbps communication speeds. The IP address of the board is configurable over Ethernet using a supplied software tool.

BACnet Network Communications

The BACnet Network Card OPTCJ is used for connecting the SVX Drive to BACnet networks. It includes a 5.08 mm pluggable connector. Data transfer is Master-Slave/Token Passing (MS/TP) RS-485. This interface uses a collection of 30 Binary Value Objects (BVOs) and 35 Analog Value Objects (AVOs) to communicate drive parameters. The card supports 9.6, 19.2 and 38.4 Kbaud communication speeds and supports network addresses 1 to 127.

EtherNet/IP Network Communications

The EtherNet/IP Network Card OPTCK is used for connecting the SVX Drive to Ethernet/Industrial Protocol networks. It includes an RJ-45 pluggable connector. The interface uses CIP objects to communicate drive parameters (CIP is "Common Industrial Protocol," the same protocol used by DeviceNet). The board supports 10 Mbps and 100 Mbps communication speeds. The IP address of the board is configurable by Static, BOOTP and DHCP methods.

Control/Communication Option Descriptions

For availability, see Product Selection for base drive voltage required.

Available Control/Communications Options

Option	Description	Option Type
K1	**Door-Mounted Speed Potentiometer**—Provides the enclosed 18-pulse drive with the ability to adjust the frequency reference using a door-mounted potentiometer. This option uses the 10 Vdc reference to generate a 0–10 V signal at the analog voltage input signal terminal. When the HOA bypass option is added, the speed is controlled when the HOA switch is in the HAND position. Without the HOA bypass option, a two-position switch (labeled local/remote) is provided on the keypad to select speed reference from the speed potentiometer or a remote speed signal.	Control
K2	**Door-Mounted Speed Potentiometer with HOA Selector Switch**—Provides the enclosed 18-pulse drive with the ability to start/stop and adjust the speed reference from door-mounted control devices or remotely from customer-supplied inputs. In HAND position, the drive will start and the speed is controlled by the door-mounted speed potentiometer. The drive will be disabled in the OFF position. When AUTO is selected, the drive run and speed control commands are via user-supplied dry contact and 4–20 mA signal.	Control
K4	**HAND/OFF/AUTO Switch for Non-Bypass Configurations**—Provides a three-position selector switch that allows the user to select either a HAND or AUTO mode of operation. HAND mode is defaulted to keypad operation, and AUTO mode is defaulted to control from an external terminal source. These modes of operation can be configured via drive programming to allow for alternate combinations of start and speed sources. Start and speed sources include Keypad, I/O and fieldbus.	Control
K5	**MANUAL/AUTO Speed Reference Switch**—Provides door-mounted selector switch for MANUAL/AUTO speed reference.	Control
K6	**START/STOP Pushbuttons**—Provide door-mounted START and STOP pushbuttons for either bypass or non-bypass configurations.	Control
KF	**Bypass Test Switch for RA**—Allows the user to energize the AF drive for testing while operating the motor on the bypass controller. The Test Switch is mounted on the inside of the enclosure door.	Addl. bypass
KO	**Standard Elapsed Time Meter**—Provides a door-mounted elapsed run-time meter.	Control
L1	**Power On and Fault Power Lights**—Provide a white Power On light that indicates power to the enclosed cabinet and a red fault light that indicates a drive fault has occurred.	Light
L2	**Bypass Pilot Lights for RA Bypass Options**—A green light indicates when the motor is running in Inverter mode and an amber light indicates when the motor is running in Bypass mode. The lights are mounted on the enclosure door, above the switches.	Addl. bypass
LE	**Red Run Pilot Light 0.87-Inch (22 mm)**—Provides a red Run pilot light that indicates the drive is running.	Light
P1	**Input Circuit Breaker**—High interrupting circuit breaker that provides a means of short-circuit protection for the power cables between it and the enclosed 18-pulse drive, and protection from high-level ground faults on the power cable. Allows a convenient means of disconnecting the enclosed 18-pulse drive from the line, and the operating mechanism can be padlocked in the OFF position. This is factory mounted in the enclosure. Standard rating is 65 kAIC at 208/480 V. 100 kAIC is available as an option.	Input
PE	**Output Contactor**—Provides a means for positive disconnection of the drive output from the motor terminals. The contactor coil is controlled by the drive's run or permissive logic. NC and NO auxiliary contacts rated at 10 A, 600 Vac are provided for customer use. Bypass options **RB** and **RA** include an output contactor as standard. This option includes a low VA 115 Vac fused control power transformer and is factory mounted in the enclosure.	Output
PF	**Output Filter**—Used to reduce the transient voltage (dV/dt) at the motor terminals. The output filter is recommended for cable lengths exceeding 100 ft (30.5 m) with a drive of 3 hp and above, for cable lengths of 33 ft (10.1 m) with a drive of 2 hp and below, or for a drive rated at 525–690 V. This option is mounted in the enclosure.	Output
PG	**MotoRx (300–600 Ft) 1000 V/µS dV/dt Filter**—Used to reduce transient voltage (dV/dt) and peak voltages at the motor terminals. This option is comprised of a 0.5% line reactor, followed by capacitive filtering and an energy recovery/clamping circuit. Unlike the output filter (see option PF), the MotoRx recovers most of the energy from the voltage peaks, resulting in a lower voltage drop to the motor, and therefore conserving power. This option is used when the distance between a single motor and the drive is 300–600 ft (91.4–182.9 m).	Output
PH	**Single Overload Relay**—Uses a bimetallic overload relay to provide additional overload current protection to the motor on configurations without bypass options. It is included with the bypass configurations for overload current protection in the bypass mode. The overload relay is mounted within the enclosure, and is manually resettable. Heater pack included.	Output
PI	**Dual Overload Relays**—This option is recommended when a single drive is operating two motors and overload current protection is needed for each of the motors. The standard configuration includes two bimetallic overload relays, each sized to protect a motor with 50% of the drive hp rating. For example, a 100 hp drive would include two overload relays sized to protect two 50 hp motors. The relays are mounted within the enclosure, and are manually resettable. Heater packs not included.	Output
PN	**Dual Overloads for Bypass**—This option is recommended when a single drive is operating two motors in the Bypass mode and overload current protection is needed for each of the motors. The standard configuration includes two bimetallic overload relays, each sized to protect a motor with 50% of the drive hp rating. For example, a 100 hp drive would include two overload relays sized to protect two 50 hp motors. The relays are mounted within the enclosure, and are manually resettable.	Addl. bypass
RA	**Manual HOA Bypass Controller**—The manual HAND/OFF/AUTO (HOA)—three-contactor—bypass option provides a means of bypassing the enclosed 18-pulse drive, allowing the AC motor to be operated at full speed directly from the AC supply line. This option consists of an input HMCP, a fused control power transformer, and a full voltage bypass starter with a door-mounted HOA selector switch and an INVERTER/BYPASS switch. The HOA switch provides the ability to start and stop the drive in the inverter mode. IEC type input, bypass and input contactors are provided. The contactors are mechanically and electrically interlocked (see wiring diagram on **Page V6-T2-320**).	Bypass
RC	**Auto Transfer HOA Bypass Controller** —The manual HAND/OFF/AUTO (HOA)—three-contactor—bypass option provides a means of bypassing the enclosed 18-pulse drive, allowing the AC motor to be operated at full speed directly from the AC supply line. The circuitry provides an automatic transfer of the load to "across the line" operation after a drive trip. This option consists of an input HMCP, a fused control power transformer, and a full voltage bypass starter with a door-mounted HOA selector switch and an INVERTER/BYPASS switch. The HOA switch provides the ability to start and stop the drive in either mode. IEC type input, bypass and input contactors are provided. The contactors are mechanically and electrically interlocked (see wiring diagram on **Page V6-T2-320**). Door-mounted pilot lights are provided that indicate bypass or inverter operation. A green light indicates when the motor is running in inverter mode and an amber light indicates when the motor is running in bypass mode. **WARNING**: The motor may restart when the overcurrent relay is reset when operating in bypass, unless the IOB selector switch is turned to the OFF position.	Bypass
RG	**Reduced Voltage Starter for Bypass**—Used in conjunction with bypass option RA or RC. This option adds reduced voltage soft starter to bypass assembly for soft starting in bypass mode.	Bypass

For availability, see Product Selection for base drive voltage required.

Available Control/Communications Options, continued

Option	Description	Option Type
S7	**10.00-Inch (254.0 mm) Expansion**—Expansion cabinet allows for special components, customer-supplied components or oversized cables. **NOTE:** Enclosure expansion rated Type 1 only.	Enclosure
S8	**20.00-Inch (508.0 mm) Expansion**—Expansion cabinet allows for special components, customer-supplied components or oversized cables. **NOTE:** Enclosure expansion rated Type 1 only.	Enclosure
S9	**Space Heater**—Prevents condensation from forming in the enclosure when the drive is inactive or in storage. Includes a thermostat for variable temperature control. The heater requires a customer-supplied 115 V remote supply source.	Enclosure

Dissipated Watt Losses

Horsepower	40	50	60	75	100	125	150	200	250	300	350	400	450	500	600	700	800
Watts	1844	2170	2540	3040	4011	4940	5730	8020	9383	11600	13600	15700	16250	17976	20393	27200	31400

Conformal (Varnished) Coating ①

Chassis Frame	Delivery Code	Chassis Frame	Delivery Code
FR6	FP	FR9	FP
FR7	FP	FR10	FP
FR8	FP	FR11	FP
—	—	FR12	FP

480 V Input Disconnect Selection ②

Horsepower	P1 Input Breaker	Bypass Motor Circuit Protector (RA, RB, RC, RD)
25	HFD3050	HMCP050K2C
30	HFD3060	HMCP100R3C
40	HFD3080	HMCP100R3C
50	HFD3100	HMCP100R3C
60	HFD3100	HMCP150T4C
75	HFD3125	HMCP150T4C
100	HFD3150	HMCP150U4C
125	HFD3200	HMCP250W5C
150	HFD3225	HMCP250W5C
200	HKD3300	HMCP400X5C
250	HKD3400	HMCP400X5C
300–400	HLD3600	HMCP600L6W
500–600	NGH308033E	HMCP800X7W
650–800	NGH312033E	③

Enclosed Drive Options

Light Options

Description	Catalog Number Suffix
Power on, run, fault LED lights (22 mm)	**L1**
Power on, fault LED lights (22 mm)	**L3**
Green LED run light (22 mm)	**LA**
Green LED stop light (22 mm)	**LD**
Red LED run light (22 mm)	**LE**
Red LED stop light (22 mm)	**LF**
Red LED fault light (22 mm)	**LG**
Power on white LED light (22 mm)	**LJ**
Miscellaneous LED light (22 mm)	**LU**

Control Options

Description	Catalog Number Suffix
Door-mounted speed potentiometer	**K1**
Door-mounted speed potentiometer with HOA selector switch	**K2**
HOA selector switch	**K4**
MANUAL/AUTO reference switch	**K5**
START-STOP pushbuttons	**K6**
Type D2 control relay	**SD**
On-delay relay	**SE**
Off-delay relay	**SF**
Additional terminal blocks per 4 points	**SD**

Notes

① See catalog number description to order.
② Contact factory for 208 V and 575 V applications.
③ Contact factory.

Bypass Control Options

Description	Catalog Number Suffix
Bypass test switch used with RA	**KF**
Inverter/bypass pilot lights	**L2**

Meter Options

Description	Catalog Number Suffix
Standard elapsed time meter	**KO**
Frequency meter	**KS**
MP-3000 relay with URTD	**KV**
MP-3000 relay with URTD and CTs	**KU**

Enclosure Options

Enclosure Size	Catalog Number Suffix
10.00 Inch (254.0 mm) Expansion	
7	**S7**
8	**S7**
9	**S7**
10	**S7**
11	**S7**
20.00 Inch (508.0 mm) Expansion	
7	**S8**
8	**S8**
9	**S8**
10	**S8**
11	**S8**
Space Heater ①	
7	**S9**
8	**S9**
9	**S9**
10	**S9**
11	**S9**
Plastic Nameplate	
7	**SN**
8	**SN**
9	**SN**
10	**SN**
11	**SN**

208 and 230 V Power Options, 25–200 hp

Description	Catalog Number Suffix
Input breaker	**P1**
Output contactor	**PE**
Single overload relay	**PH**
Dual overload relays	**PI**
MOV	**P7**
50 kA surge protective device	**P8**
100 kA surge protective device	**PA**

480 and 575 V Power Options, 25–800 hp

Description	Catalog Number Suffix
Input breaker	**P1**
Output contactor	**PE**
Output filter	**PF**
MotoRx (300–600 Ft) dV/dt filter	**PG**
Single overload relay	**PH**
Dual overload relays	**PI**
Input MOV	**P7**
50 kA surge protective device	**P8**
100 kA surge protective device	**PA**

208 and 230 V Bypass Options, 25–200 hp

Description	Catalog Number Suffix
Manual HOA bypass controller	**RA**
Auto transfer HOA bypass controller	**RC**
Reduced voltage starter for bypass	**RG**
Dual overloads for bypass	**PN**

480 and 575 V Bypass Options, 25–800 hp

Description	Catalog Number Suffix
Manual HOA bypass controller	**RA**
Auto transfer HOA bypass controller	**RC**
Reduced voltage starter for bypass	**RG**
Dual overloads for bypass	**PN**

Note

① Requires customer-supplied 115 Vac supply.

Technical Data and Specifications

Enclosed 18-Pulse Drives

Description	Specification
Primary Design Features	
45–66 Hz input frequency	Standard
Output: AC volts maximum	Input voltage base
Output frequency range	0–320 Hz
Initial output current (I_H)	250% for 2 seconds
Overload (1 minute [I_H/I_L])	150%/110%
Enclosure space heater	Optional
Oversize enclosure	Standard
Output contactor	Optional
Bypass motor starter	Optional
Listings	UL, cUL, 508C
Protection Features	
Incoming line fuses	Standard 200 kAIC rating
AC input circuit disconnect	Optional
Phase rotation insensitive	Standard
EMI filter	Standard FR6 thru FR9 ①
Input phase loss protection	Standard
Input overvoltage protection	Standard
Line surge protection	Standard
Output short-circuit protection	Standard
Output ground fault protection	Standard
Output phase protection	Standard
Overtemperature protection	Standard
DC overvoltage protection	Standard
Drive overload protection	Standard
Motor overload protection	Standard
Programmer software	Optional
Local/remote keypad	Standard
Keypad lockout	Standard
Fault alarm output	Standard
Built-in diagnostics	Standard
Surge protective device	Optional

Description	Specification
Input/Output Interface Features	
Setup adjustment provisions	
Remote keypad/display	Standard
Personal computer	Standard
Operator control provisions	
Drive mounted keypad/display	Standard
Remote keypad/display	Standard
Conventional control elements	Standard
Serial communications	Optional
115 Vac control circuit	Optional
Speed setting inputs	
Keypad	Standard
0–10 Vdc potentiometer/voltage signal	Standard
4–20 mA isolated	Configurable
4–20 mA differential	Configurable
3–15 psig	Optional
Analog outputs	
Speed/frequency	Standard
Torque/load/current	Programmable
Motor voltage	Programmable
Kilowatts	Programmable
0–10 Vdc signals	Configurable w/jumpers
4–20 mA DC signals	Standard
Isolated signals	Standard
Discrete outputs	
Fault alarm	Standard
Drive running	Standard
Drive at set speed	Programmable
Optional parameters	14
Dry contacts	2 Form C contacts available
Additional discrete outputs	Optional
Communications	
RS-232	Standard
RS-422/485	Optional
DeviceNet™	Optional
Modbus RTU	Optional
CANopen (slave)	Optional
PROFIBUS-DP	Optional
LonWorks	Optional
Johnson Controls Metasys N2	Optional
EtherNet/IP/Modbus TCP	Optional
BACnet	Optional

Note

① The EMI filter is optional in FR10 and larger.

Enclosed 18-Pulse Drives

Description	Specification
Performance Features	
Sensorless vector control	Standard
Volts/hertz control	Standard
IR and slip compensation	Standard
Electronic reversing	Standard
Dynamic braking	Optional
DC braking	Standard
PID set point controller	Programmable
Critical speed lockout	Standard
Current (torque) limit	Standard
Adjustable acceleration/deceleration	Standard
Linear or S curve accel/decel	Standard
Jog at preset speed	Standard
Thread/preset speeds	7
Automatic restart	Selectable
Coasting motor start	Standard
Coast or ramp stop selection	Standard
Elapsed time meter	Optional
Carrier frequency adjustment	1–16 kHz
Standard Conditions for Application and Service	
Maximum operating ambient temperature	0–50 °C up to FR9 0–40 °C FR10 and larger, consult factory for 50 °C rating above FR9
Storage temperature	–40 to 60 °C
Humidity (maximum), noncondensing	95%
Altitude (maximum without derate)	3300 ft (1000 m)
Line voltage variation	+10/–15%
Line frequency variation	45–66 Hz
Efficiency	>95%
Power factor (displacement)	0.99+
Power factor (apparent)	0.99

Standard I/O Specifications

Description	Specification
Six–digital input programmable	24 V: "0" ≤10 V, "1" ≥18V,R_i >5 kohms
Two–analog input configurable w/jumpers	Voltage: 0–±10 V, R_i >200 kohms Current: 0 (4)–20 mA, R_i = 250 ohms
Two–digital output programmable	Form C relays 250 Vac 30 Vdc 2 amp resistive
One–analog output programmable configurable w/jumper	0–20 mA, R_L max. 500 ohms 10 bits ±2%

I/O Specifications for Control/Communication Options

Description	Specification
Analog voltage, input	0–±10 V, R_i ≥200 kilohms
Analog current, input	0 (4)–20 mA, R_i = 250 ohms
Digital input	24 V: "0" ≤10 V, "1" ≥18V, R_i >5 kilohms
Auxiliary voltage	24 V (±20%), max. 50 mA
Reference voltage	10 V ±3%, max. 10 mA
Analog current, output	0 (4)–20 mA, R_L = 500 kilohms, resolution 10 bit, accuracy ≤±2%
Analog voltage, output	0 (2)–10 V, R_L ≥1 kilohm, resolution 10 bit, accuracy ≤±2%
Relay output max. switching voltage	300 Vdc, 250 Vac
Relay output max. switching load	3 A/24 Vdc, 300 Vdc, 250 Vac ①
Relay output max. continuous load	2 A rms
Thermistor input	R_{trip} = 4.7 kohms

Note

① For applications above 3 A consult instruction manual.

Wiring Diagrams

Power Diagram Up to FR9

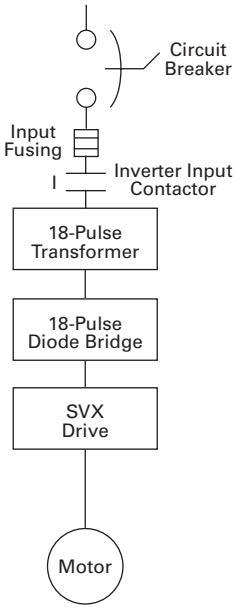

Power Diagram Up to FR9 with Bypass

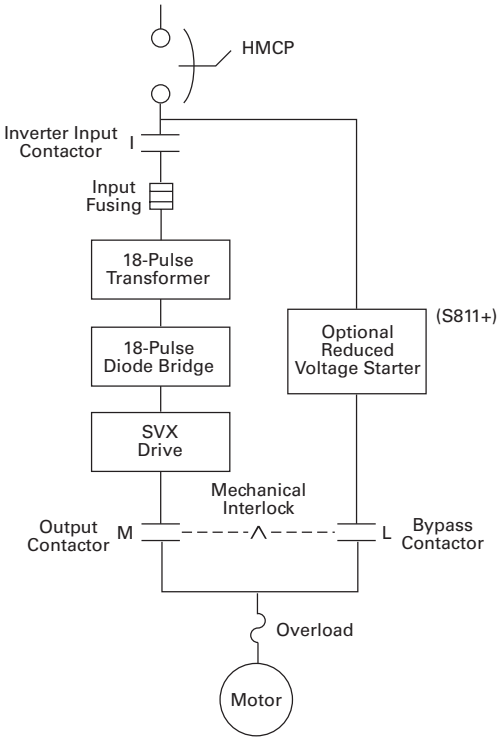

Power Diagram FR10 and Larger

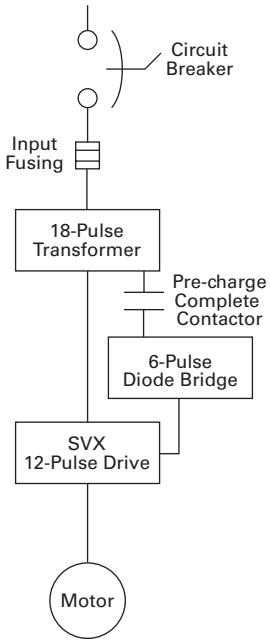

Power Diagram FR10 and Larger with Bypass

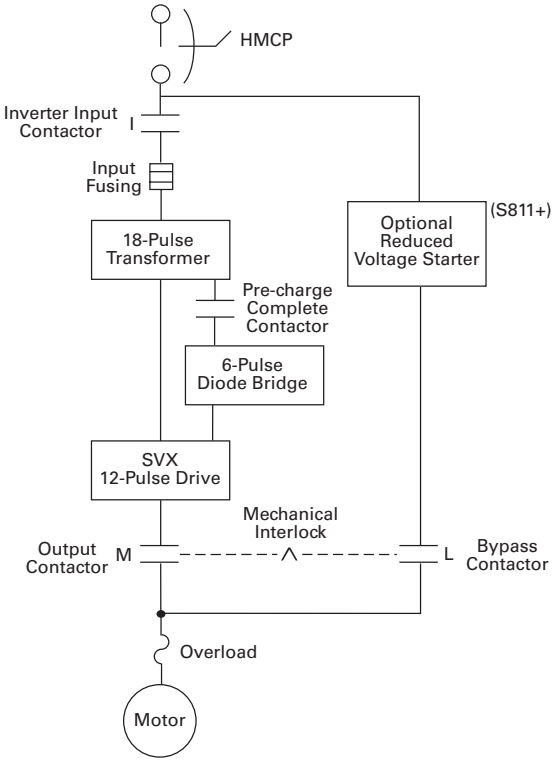

Dimensions

Approximate Dimensions in Inches (mm)

Enclosure Size 7

25–150 hp I_L and 25–125 hp I_H 480 V—25–100 hp I_L and 25–75 hp I_H 575 V

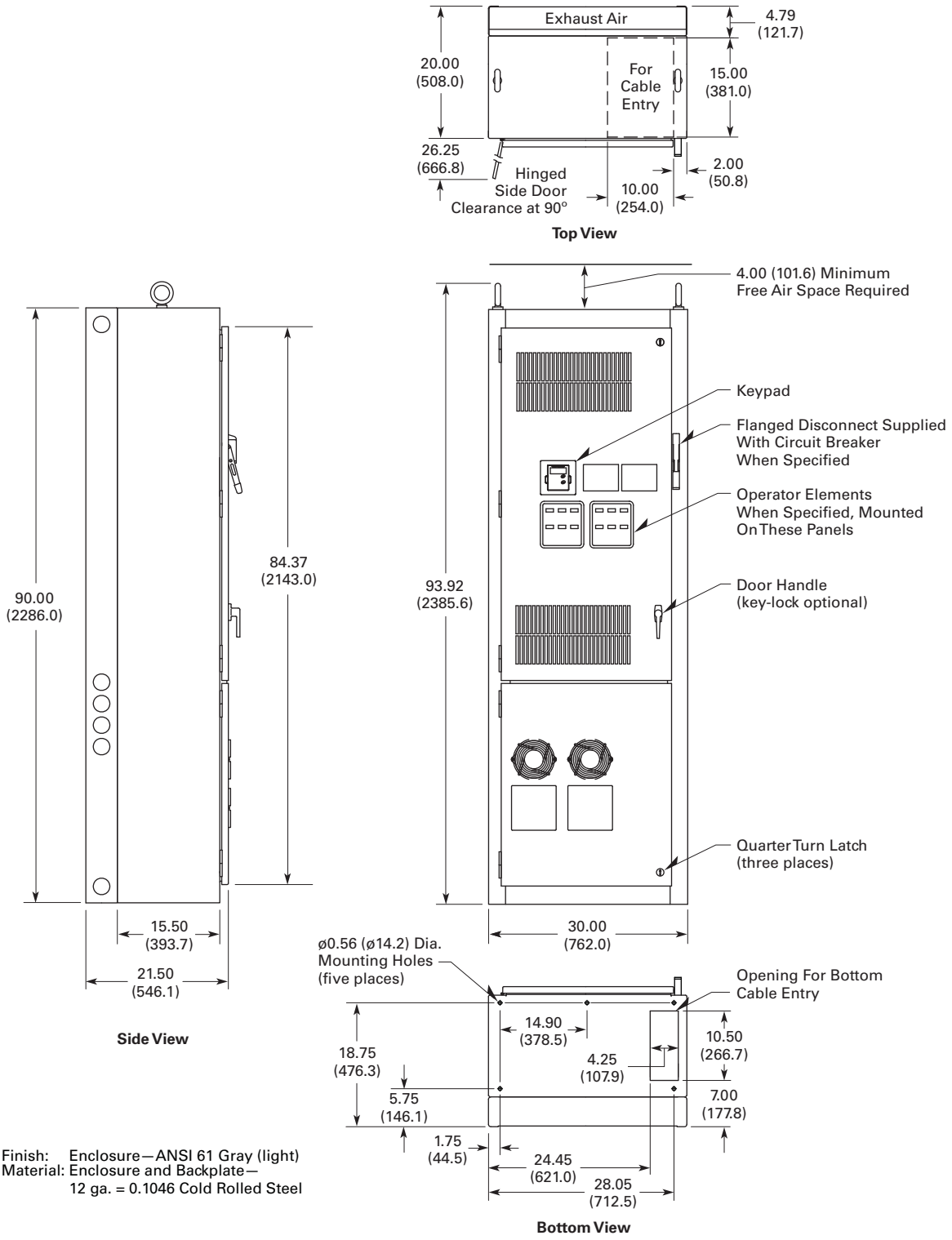

Finish: Enclosure—ANSI 61 Gray (light)
Material: Enclosure and Backplate—
12 ga. = 0.1046 Cold Rolled Steel

Approximate Dimensions in Inches (mm)

Enclosure Size 8

200–250 hp I_L and 150–200 hp I_H 480 V—125–200 hp I_L and 100–150 hp I_H 575 V

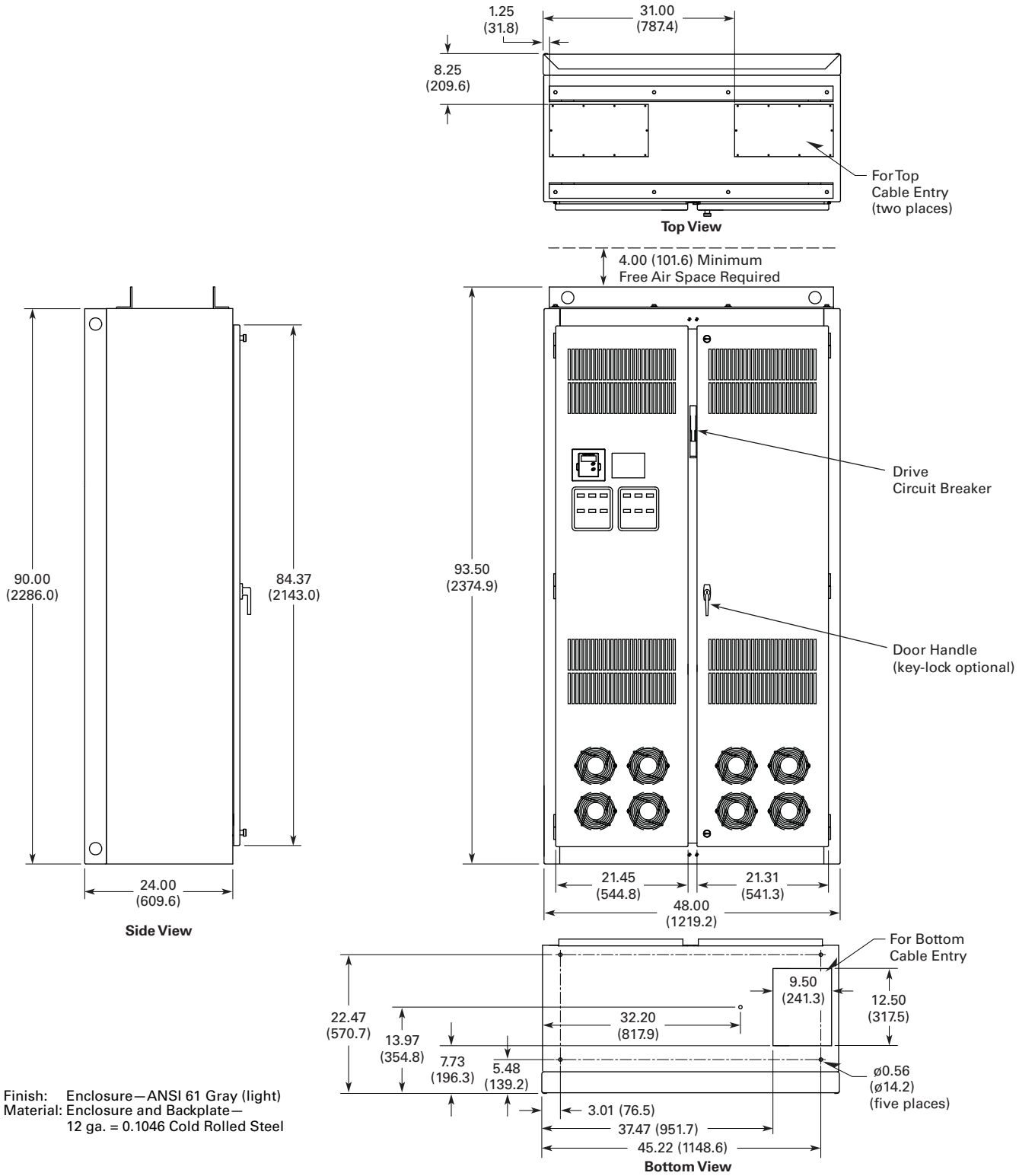

Finish: Enclosure—ANSI 61 Gray (light)
Material: Enclosure and Backplate—
12 ga. = 0.1046 Cold Rolled Steel

Approximate Dimensions in Inches (mm)

Enclosure Size 9

300–400 hp I_L and 250–350 hp I_H 480 V—250–400 hp I_L and 200–300 hp I_H 575 V

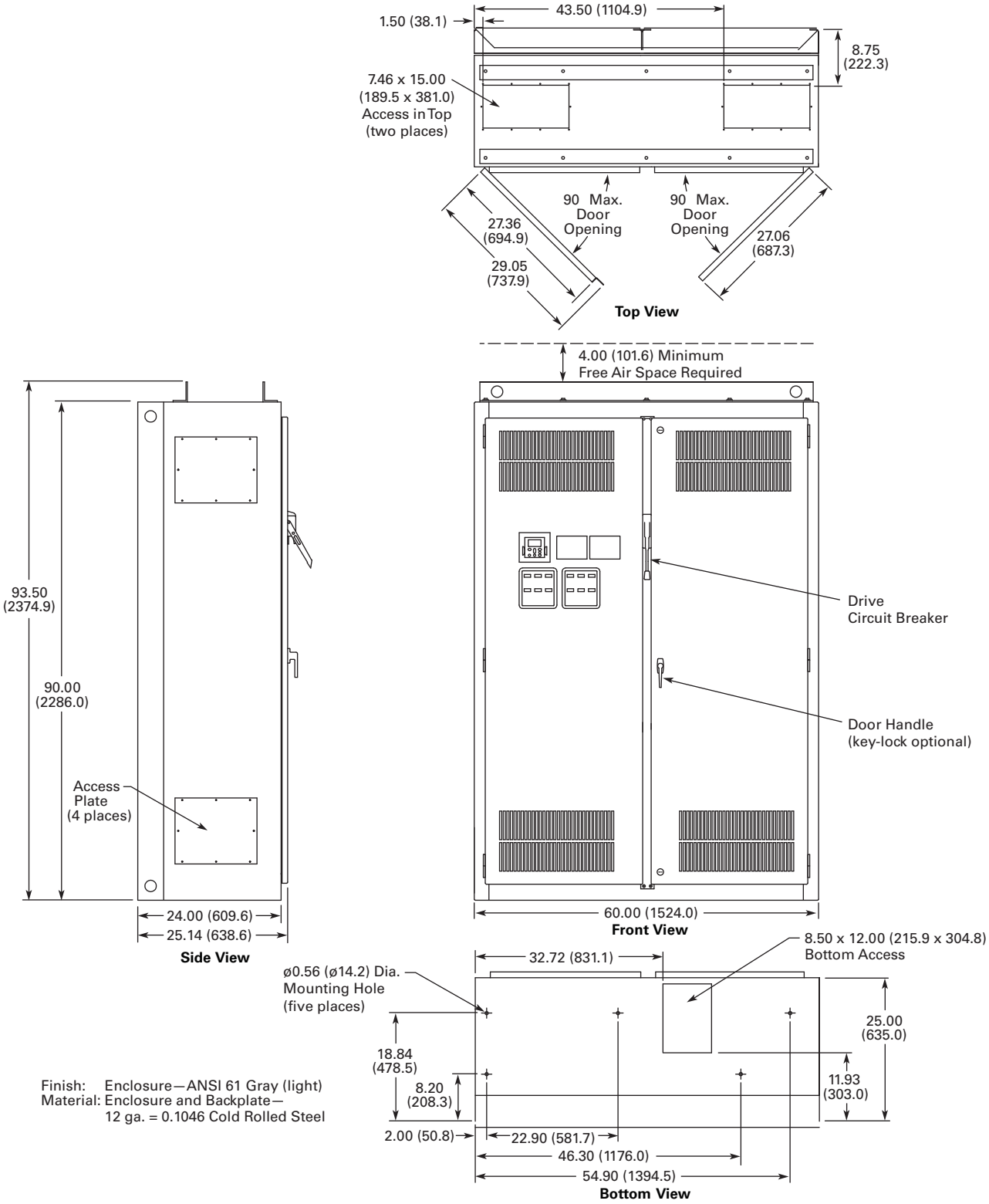

Finish: Enclosure—ANSI 61 Gray (light)
Material: Enclosure and Backplate—
12 ga. = 0.1046 Cold Rolled Steel

Approximate Dimensions in Inches (mm)

Enclosure Size 10

500–600 hp I_L and 400–500 hp I_H 480 V—500–600 hp I_L and 400–500 hp I_H 575 V

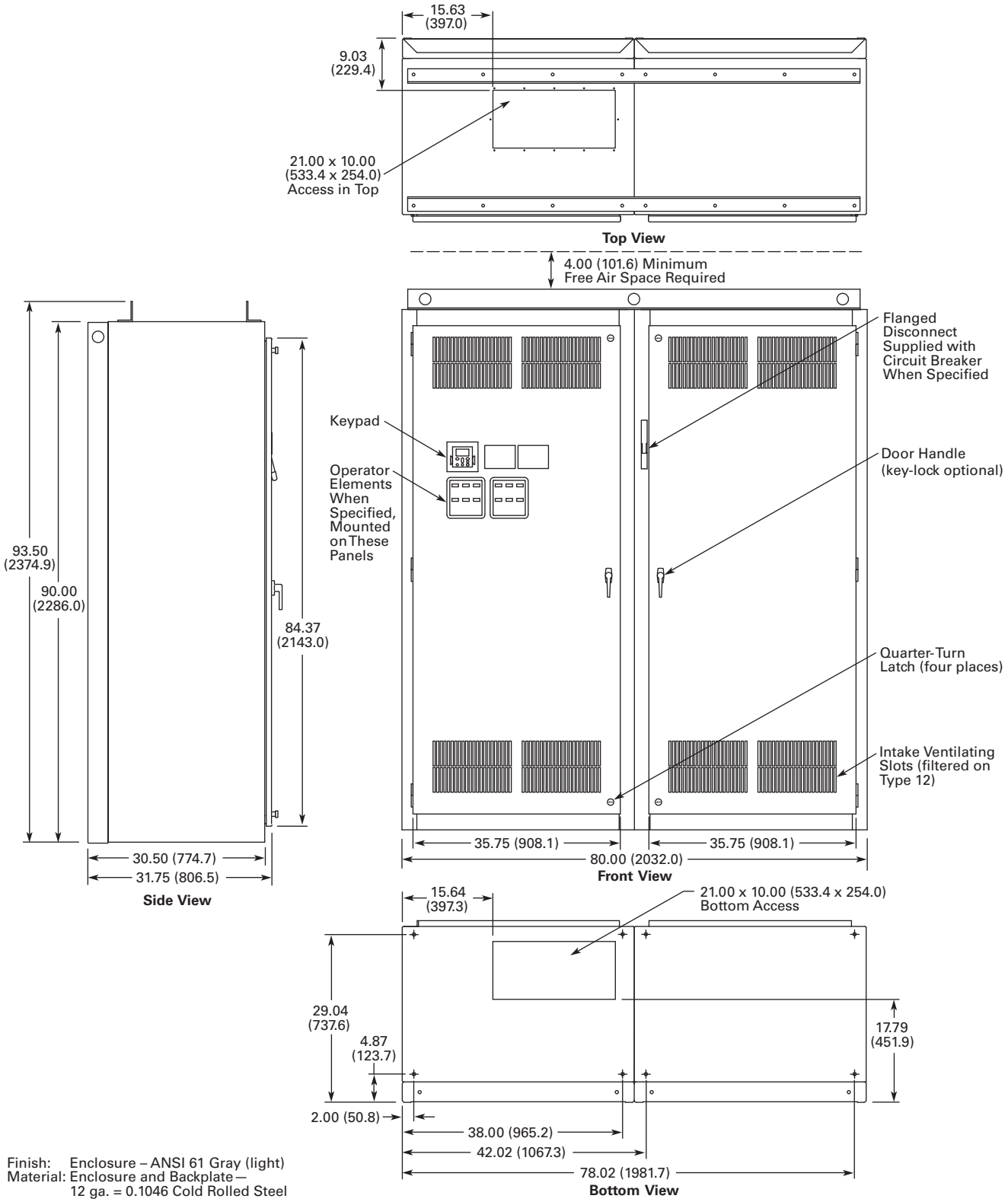

Finish: Enclosure – ANSI 61 Gray (light)
Material: Enclosure and Backplate—
12 ga. = 0.1046 Cold Rolled Steel

Approximate Dimensions in Inches (mm)

Enclosure Size F Type 3R Drives

25–250 hp I_L and 25–200 hp I_H 480 V—25–200 hp I_L and 25–150 hp I_H 575 V Type 3R Drives

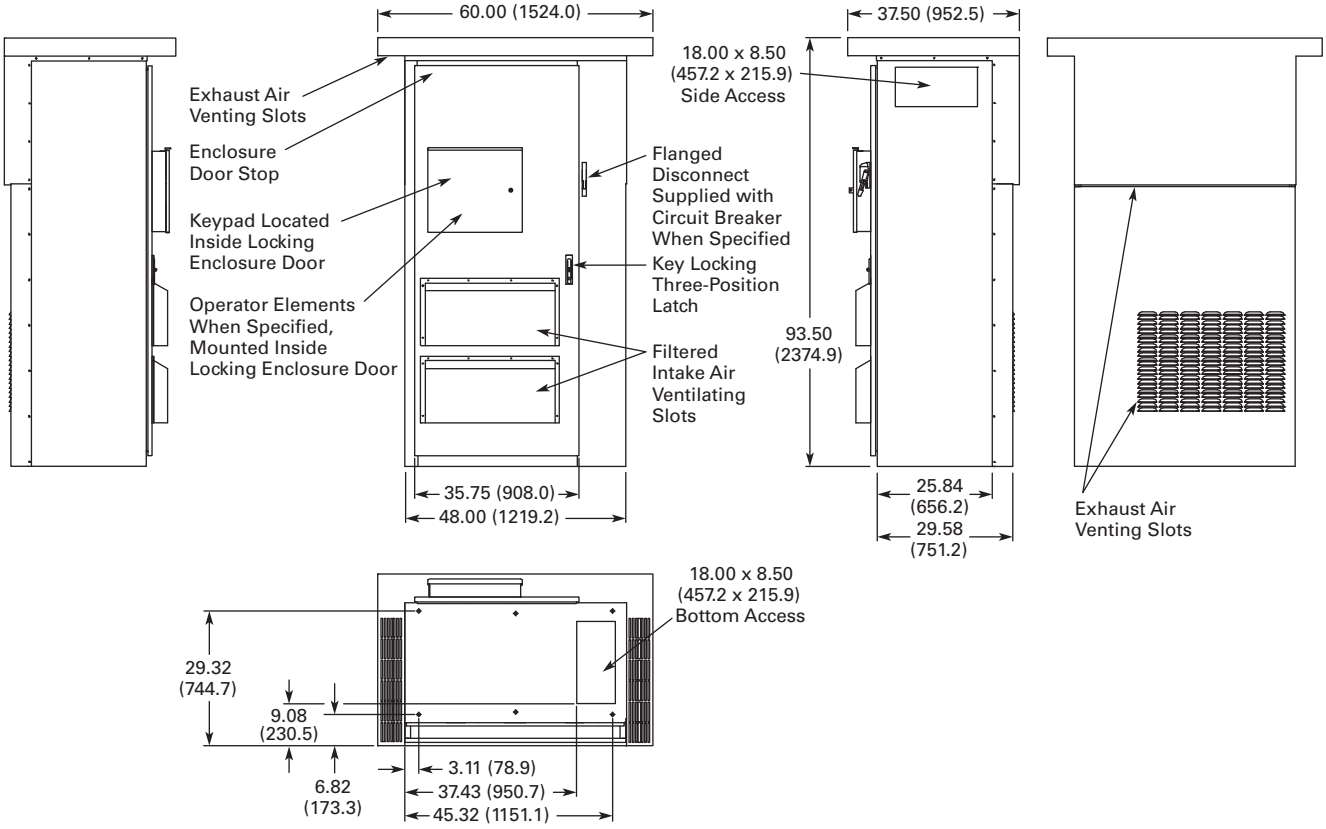

Enclosed 18-Pulse Drive Enclosure Dimensions

Enclosure Size ①	Width	Height	Depth	Approx. Shipping Weight in Lbs (kg)
7	30.00 (762.0)	90.00 (2286.0)	21.50 (546.1)	1000 (454)
8	48.00 (1219.2)	90.00 (2286.0)	26.14 (664.0)	1400 (636)
9	60.00 (1524.0)	90.00 (2286.0)	25.74 (653.8)	1800 (817)
10	80.00 (2032.0)	90.00 (2286.0)	31.75 (806.5)	2100 (953)
11 ②③	120.00 (3048.0)	90.00 (2286.0)	25.74 (653.8)	2500 (1,135)
F ④	60.00 (1524.0)	93.50 (2374.9)	37.50 (952.5)	2500 (1,135)

Notes

① Enclosure sizes accommodate drive and options, including bypass and disconnect. For other power options, consult your Eaton representative.
② Consult factory. Limited power options available.
③ Enclosure size 11 consists of two of the enclosure size 9.
④ All Type 3R drives use the Size F enclosure.

Enclosed Regenerative Drives

Contents

Description	*Page*
Enclosed Passive Filtered Drives	**V6-T2-251**
CPX Enclosed 18-Pulse Drives	**V6-T2-302**
RGX Enclosed Regenerative Drives	
Catalog Number Selection	**V6-T2-328**
Product Selection	**V6-T2-329**
Options	**V6-T2-331**
Technical Data and Specifications	**V6-T2-332**
Dimensions	**V6-T2-333**

RGX Enclosed Regenerative Drives

Product Description

The RGX is an enclosed solution to meet the needs of customer's regenerative load applications. It combines Eaton's comprehensive family of DC common DC bus drive products together with the necessary circuit protection and filtering to give the customer an all-in-one package. The RGX is available in 480 V and 575 V configurations in sizes up through 900 hp.

Base Assembly Components

LCL Filter

An LCL filter is applied on the line side of the of the front end unit and integrated into the enclosed solution. This unit corrects the voltage wave form to return clean power back to the power system.

Front-End Unit

The RGX uses the SPA drive module, which is an active bi-directional converter. This converter allows power to flow from the main voltage to the DC bus and back from the DC bus to the main voltage.

Inverter Unit

The RGX uses an SPI drive module, which is a DC-fed power inverter for the supply and control of AC motors. This inverter is specifically designed to also allow power to flow back to the DC bus in a regenerative load application.

Harmonic Distortion

Harmonics are distorted electrical waveforms that produce inefficiencies, which could negatively affect your system. These inefficiencies can cause increased electrical usage, power quality problems, increased machine wear and utility penalties. The RGX takes control of high harmonics and reduces distortion to below the IEEE 519 recommendations. This minimal harmonic output allows the RGX drive to increase user energy efficiency, extend system life and reduce maintenance costs.

Regeneration

The active front end module gives the system power regeneration capabilities. Through the use of IGBT bridge components, power flows bi-directionally through the drive unit and can be converted back to an AC voltage. Additionally, the LCL filter corrects distorted voltage wave form on the output, thus producing clean power with low harmonics suitable to be returned to utility line. With power regeneration, the system does not need large resistor banks for ridding excess energy. Eliminating resistors increases energy savings while simplifying design.

Energy Savings

The RGX provides exceptional energy savings through the use of regenerative braking. Regenerative braking uses the electric motor as a generator when slowing, and in turn, power is regenerated. Recovered, clean power can then be returned to the line or utility for other uses. Comparatively, regenerative braking reduces energy consumption greatly over traditional mechanical and resistive braking because power is returned to the line rather than released as heat.

Application Description

The RGX Series encompasses a wide range of application solutions, including belt conveyor, ball mill, extruder, centrifugal pump, center driver winder and a variety of test stands.

Standards and Certifications

- UL
- cUL
- EN 61800-5-1 (2003)

Product Identification ①

Power Flow Diagram and Components

- Power flows from the utility through the LCL filter, active-front end IGBT bridge and component inverter to the motor
- IGBT bridge components allow bi-directional current conversion and flow for power regeneration needs
- The active rectifier draws linear current off of the line, reducing peak currents on the input and reducing THDI to 2–3%
- During regeneration, the LCL filter corrects the voltage wave form to return clean power back to the utility

Power Flow Diagram and Components

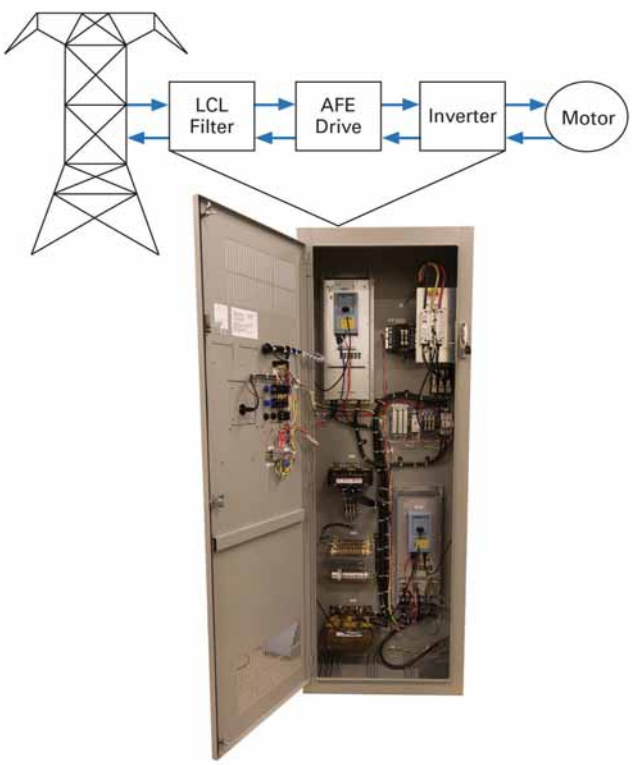

RGX Size 9 Enclosure ②

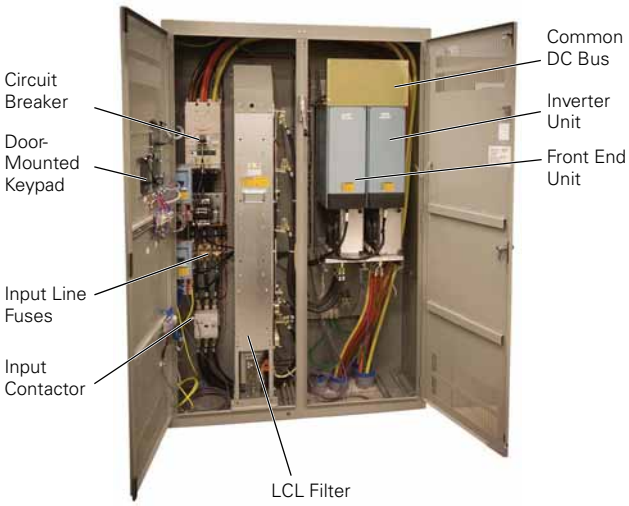

RGX Size 3 Enclosure ③

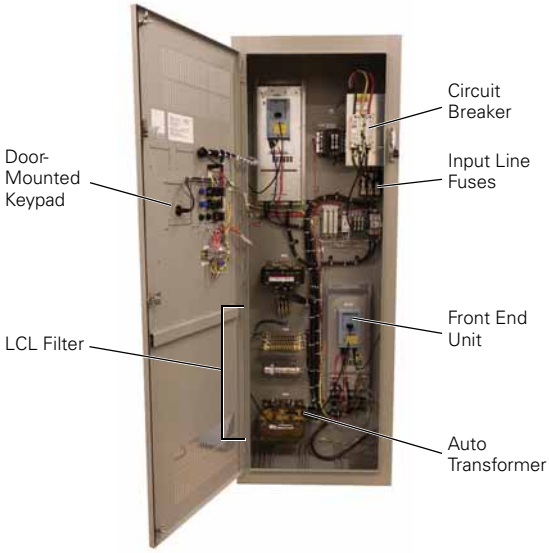

Notes

① Product identification section serves as example products and does not encompass full RGX product range.

② Size 9 enclosure example is used as a solution for the RGX product range of 100–250 hp.

③ Size 3 enclosure example is used as a solution for a 30 hp RGX product.

Catalog Number Selection

Enclosed Regenerative Drives ①

2

RGX 052 4 E 1 1 1 A 0 0 0 1 1 1

Product Family

RGX = Enclosed regenerative drives

Output

480 V	575 V
052 = 52 A – 40 hp	**032** = 32 A – 30 hp
065 = 65 A – 50 hp	**041** = 41 A – 40 hp
077 = 77 A – 60 hp	**052** = 52 A – 50 hp
096 = 96 A – 75 hp	**062** = 62 A – 60 hp
124 = 124 A – 100 hp	**077** = 77 A – 75 hp
156 = 156 A – 125 hp	**099** = 99 A – 100 hp
180 = 180 A – 150 hp	**125** = 125 A – 125 hp
240 = 240 A – 200 hp	**144** = 144 A – 150 hp
302 = 302 A – 250 hp	**192** = 192 A – 200 hp
361 = 361 A – 300 hp	**242** = 242 A – 250 hp
414 = 414 A – 350 hp	**289** = 289 A – 300 hp
477 = 477 A – 400 hp	**336** = 336 A – 350 hp
590 = 590 A – 500 hp	**382** = 382 A – 400 hp
650 = 650 A – 600 hp	**412** = 412 A – 450 hp
730 = 730 A – 650 hp	**472** = 472 A – 500 hp
820 = 820 A – 750 hp	**590** = 590 A – 600 hp
920 = 920 A – 800 hp	**650** = 650 A – 650 hp
H10 = 1030 A – 900 hp	**750** = 750 A – 750 hp

Input Phasing/ Voltage

4 = Three-phase, 480 V
5 = Three-phase, 575 V

Brake/Overload

E = No brake chopper / low overload
G = No brake chopper / high overload

Enclosure

1 = Type 1
6 = Type 1 filtered and gasketed

Power Disconnect Options

0 = None
1 = HMCP disconnect ②
2 = Circuit breaker
8 = Circuit breaker/SPD

Bypass Options

0 = None
1 = Manual HOA bypass
2 = Manual HOA bypass/isolation fusing
4 = Manual HOA bypass/isolation fusing/SPD
7 = Manual HOA bypass/SPD
H = Manual HOA RVSS bypass
J = Manual HOA RVSS bypass/isolation fusing
L = Manual HOA RVSS bypass/isolation fusing/SPD
P = Manual HOA RVSS bypass/SPD

Output Power Options

0 = None
A = Output contactor
B = 3% output reactor
D = Traditional dV/dt filter
E = 3% output reactor / output contactor
G = Traditional dV/dt / output contactor

Control Options

0 = None
2 = Start-stop pushbutton
A = HOA switch
C = Start-stop pushbutton with HOA switch

Light Options

0 = None
1 = Non-bypass—22 mm power on, run, fault indicator lights
2 = Bypass—22 mm power on, VFD run, fault, bypass run indicator lights

Enclosure Options

0 = None

Com Options

0 = No option
1 = PROFIBUS-DP
2 = LonWorks
3 = CANopen (slave)
4 = DeviceNet

Option Boards 1

0 = No option
1 = 3 x DI, 3 x DO, 1 thermistor, 24 Vdc/EXT
2 = 1 x AI, 2 x AO (isolated to control board)
3 = 3 x relay dry contact (2NO + 1NO/NC)
4 = 3 x PT100 RTD thermistor input
5 = 6 DI 240 Vac input

Option Boards 2

0 = No option
1 = 3 x DI, 3 x DO, 1 thermistor, 24 Vdc/EXT
2 = 1 x AI, 2 x AO (isolated to control board)
3 = 3 x relay dry contact (2NO + 1NO/NC)
4 = 3 x PT100 RTD thermistor input
5 = 6 DI 240 Vac input

Notes

① Catalog number selection is for illustration purpose only and not to be used to create new catalog numbers.
② HMCP disconnect is standard when bypass is selected.

Product Selection

480 V Drives

RGX Drive

RGX 480 V—NEMA Type 1/IP21

Enclosure Size	hp	Current (A)	Frame Size	Catalog Number ①
Low Overload Drive and Enclosure (VT)				
7	50	65	7	**RGX0654E1**
	60	77	7	**RGX0774E1**
	75	96	7	**RGX0964E1**
5	100	124	8	**RGX1244E1**
	125	156	9	**RGX1564E1**
	150	180	9	**RGX1804E1**
	200	240	9	**RGX2404E1**
8	250	302	9	**RGX3024E1**
	300	361	10	**RGX3614E1**
	350	414	10	**RGX4144E1**
	400	477	10	**RGX4774E1**
Consult factory	500	590	12	**RGX5904E1**
	600	650	12	**RGX6504E1**
	650	730	12	**RGX7304E1**
	750	820	12	**RGX8204E1**
	800	920	12	**RGX9204E1**
	900	1030	12	**RGX10304E1**
High Overload Drive and Enclosure (CT)				
7	40	52	7	**RGX0524G1**
	50	65	7	**RGX0654G1**
	60	77	7	**RGX0774G1**
	75	96	8	**RGX0964G1**
5	100	124	9	**RGX1244G1**
	125	156	9	**RGX1564G1**
	150	180	9	**RGX1804G1**
	200	240	9	**RGX2404G1**
8	250	300	10	**RGX3004G1**
	300	361	10	**RGX3614G1**
	350	414	10	**RGX4144G1**
Consult factory	450	515	12	**RGX5154G1**
	500	590	12	**RGX5904G1**
	600	650	12	**RGX6504G1**
	650	730	12	**RGX7304G1**
	750	820	12	**RGX8204G1**
	800	920	12	**RGX9204G1**

Note

① "_" denotes that catalog numbers are incomplete, base catalog numbers.

575 V Drives

RGX Drive

RGX 575 V—NEMA Type 1/IP21

Enclosure Size	hp	Current (A)	Frame Size	Catalog Number ①
Low Overload Drive and Enclosure (VT)				
7	40	41	7	**RGX0415E1**
	50	52	7	**RGX0525E1**
	50	62	8	**RGX0625E1**
	75	77	8	**RGX0775E1**
	100	99	8	**RGX0995E1**
5	125	125	9	**RGX1255E1**
	150	144	9	**RGX1445E1**
	150	192	9	**RGX1925E1**
	200	242	9	**RGX2425E1**
	250	289	10	**RGX2895E1**
8	300	336	10	**RGX3365E1**
	400	382	10	**RGX3825E1**
Consult factory	450	412	12	**RGX4125E1**
	500	472	12	**RGX4725E1**
	600	590	12	**RGX5905E1**
	650	650	12	**RGX6505E1**
	750	750	12	**RGX7505E1**
High Overload Drive and Enclosure (CT)				
7	30	032	7	**RGX0325G1**
	40	041	7	**RGX0415G1**
	50	052	8	**RGX0525G1**
	60	062	8	**RGX0625G1**
	75	077	8	**RGX0775G1**
5	100	099	9	**RGX0995G1**
	125	125	9	**RGX1255G1**
	150	144	9	**RGX1445G1**
	150	170	9	**RGX1705G1**
8	200	192	10	**RGX1925G1**
	250	242	10	**RGX2425G1**
	300	289	10	**RGX2895G1**
Consult factory	400	382	12	**RGX3825G1**
	450	412	12	**RGX4125G1**
	500	472	12	**RGX4725G1**
	600	590	12	**RGX5905G1**
	650	650	12	**RGX6505G1**

Note

① "_" denotes that catalog numbers are incomplete, base catalog numbers.

Options

RGX Series Option Board Kits

The RGX Series drives can accommodate a wide selection of expander and adapter option boards to customize the drive for your application needs. The drive's control unit is designed to accept a total of five option boards.

The RGX Series factory installed standard board configuration includes an A9 I/O board and an A2 relay output board, which are installed in slots A and B.

Option Boards

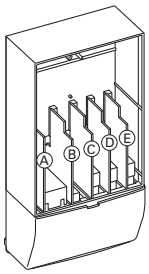

Option Board Kits

Option Kit Description ①	Allowed Slot Locations ②	Field Installed Catalog Number
Standard I/O Cards		
2 RO (NC-NO)	B	**OPTA2**
6 DI, 1 DO, 2 AI, 1AO, 1 +10 Vdc ref, 2 ext +24 Vdc/EXT +24 Vdc	A	**OPTA9**
Extended I/O Cards		
2 RO, therm	B	**OPTA3**
Encoder low volt +5 V/15 V 24 V	C	**OPTA4**
Encoder high volt +15 V/24 V	C	**OPTA5**
Double encoder	C	**OPTA7**
6 DI, 1 DO, 2 AI, 1 AO	A	**OPTA8**
3 DI (encoder 10–24 V), out +15 V/+24 V, 2 DO (pulse+direction)	C	**OPTAE**
6 DI, 1 ext +24 Vdc/EXT +24 Vdc	B, C, **D**, E	**OPTB1**
1 RO (NC-NO), 1 RO (NO), 1 therm	B, C, **D**, E	**OPTB2**
1 AI (mA isolated), 2 AO (mA isolated), 1 ext +24 Vdc/EXT +24 Vdc	B, C, **D**, E	**OPTB4**
3 RO (NO)	B, C, **D**, E	**OPTB5**
1 ext +24 Vdc/EXT +24 Vdc, 3 Pt100	B, C, **D**, E	**OPTB8**
1 RO (NO), 5 DI 42–240 Vac input	B, C, **D**, E	**OPTB9**
SPI, absolute encoder	C	**OPTBB**
Communication Cards ③		
Modbus	D, **E**	**OPTC2**
Johnson Controls N2	D, **E**	**OPTC2**
Modbus TCP	D, **E**	**OPTCI**
BACnet	D, **E**	**OPTCJ**
EtherNet/IP	D, **E**	**OPTCQ**
PROFIBUS-DP	D, **E**	**OPTC3**
LonWorks	D, **E**	**OPTC4**
PROFIBUS-DP (D9 connector)	D, **E**	**OPTC5**
CANopen (slave)	D, **E**	**OPTC6**
DeviceNet	D, **E**	**OPTC7**
Modbus (D9 type connector)	D, **E**	**OPTC8**
Adapter	D, **E**	**OPTD1**
Adapter	D, **E**	**OPTD2V**
RS-232 with D9 connection	D, **E**	**OPTD3**

Notes

① AI = Analog Input; AO = Analog Output, DI = Digital Input, DO = Digital Output, RO = Relay Output
② Option card must be installed in one of the slots listed for that card. Slot indicated in bold is the preferred location.
③ OPTC2 is a multi-protocol option card.

Technical Data and Specifications

Enclosed Regenerative Drives

Description	Specification
Supply Connection	
Input voltage U_{in} (AC) front end modules	380–500 Vac/525–690 Vac –10% to +10%
Input voltage U_{in} (DC) inverter	465–800 Vdc/640–1100 Vdc –0% to 0%, the waviness of the inverter supply voltage, formed in rectification of the electric network's alternating voltage in basic frequency, must be less than 50 V peak-to-peak
Output voltage U_{out} (AC) inverter	3 ~ 0–U_{in}/1.4
Output voltage U_{out} (DC) active front end module	1.35 x U_{in} (factory default)
Output voltage U_{out} (DC) non-regenerative front end module	1.35 x U_{in}
Ambient Conditions	
Ambient operating temperature	14 (no frost) to +104 °F (–10 °C to +40 °C)
Storage temperature	–40 °F to +158 °F (–40 °C to +70 °C)
Relative humidity	0 to 95% RH, non-condensing, non-corrosive, no dripping water
Air quality	
Chemical vapors	IEC 721-3-3, unit in operation, class 3C2
Mechanical particles	IEC 721-3-3, unit in operation, class 3S2
Altitude	100% load capacity (no derating) up to 1000 m 1% derating for each 100 m above 1000 m; max. 3000 m
Vibration	5–150 Hz
EN50178/EN60068-2-6	Displacement amplitude 0.25 mm (peak) at 3–15.8 Hz Max. acceleration amplitude 1 G at 15.8–150 Hz
Shock EN50178, EN60068-2-27	UPS Drop Test (for applicable UPS weights) Storage and shipping: max. 15 G, 11 ms (in package)
Cooling capacity required	Approximately 2%
Cooling air required	FR4 41 cfm, FR6 250 cfm, FR7 250 cfm, FR8 383 cfm FI9 677 cfm, FI10 824 cfm, FI12 1648 cfm, FI13 2472 cfm
Unit enclosure class	FR4–FR7 NEMA Type 1/IP21; FR8, FI9–FI14 chassis (IP00)
EMC (at fault settings)	
Immunity	Fulfill all EMC immunity requirements
Safety	
Approvals	UL, cUL, EN 61800-5-1 (2003), see unit nameplate for more detailed approvals
Control Connections	
Analog input voltage	0–10 V, R_i = 200 kohms, (–10 V to +10 V joystick control) Resolution 0.1%, accuracy ±1%
Analog input current	0(4)–20 mA, R_i = 250 ohms differential
Digital inputs	6, positive or negative logic; 18–30 Vdc
Auxiliary voltage	+24 V, ±15%, max. 250 mA
Output reference voltage	+10 V, +3%, max. load 10 mA
Analog output	0(4)–20 mA; RL max. 500 ohms; resolution 10 bits Accuracy ±2%
Digital outputs	Open collector output, 50 mA/48 V
Relay outputs	2 programmable change-over relay outputs Switching capacity: 24 Vdc/8 A, 250 Vac/8 A, 125 Vdc/0.4 A Min. switching load: 5 V/10 mA

Dimensions

Approximate Dimensions in Inches (mm)

Enclosure Size 3

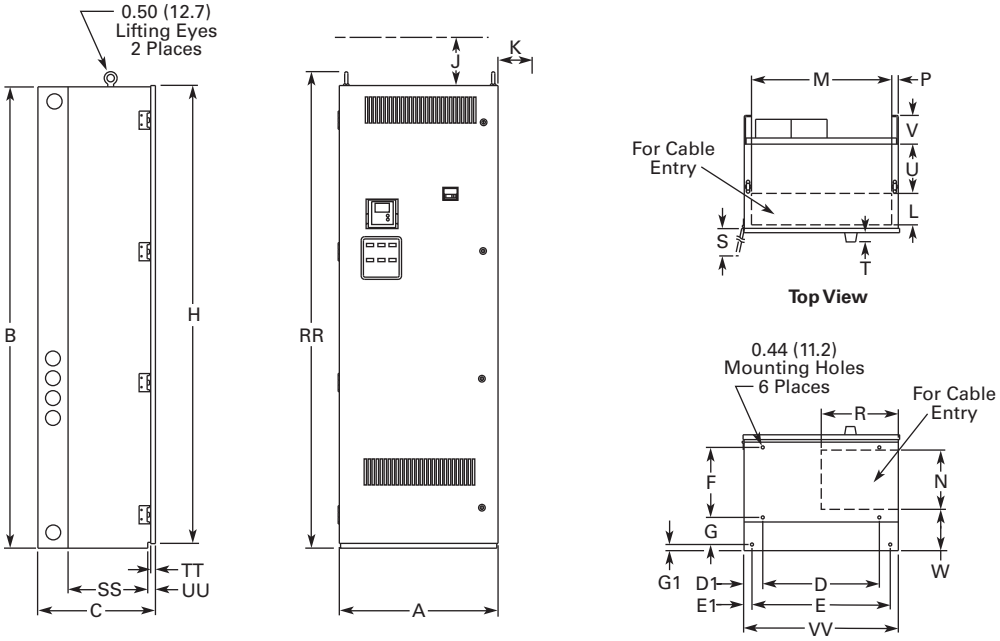

NEMA Type 1/IP21

Bottom View

For reference only, dimensions are subject to change.

Wide	High	Deep	Mounting							Door Height	Min. Air Space	
A	B	C	D	D1	E	E1	F	G	G1	H	J	K
26.4 (671)	77.0 (1956)	19.4 (493)	19.5 (495)	3.3 (83)	23.0 (584)	1.5 (38)	11.7 (298)	5.5 (140)	0.9 (24)	76.4 (1939)	4.0 (102)	3.0 (76)

Cable Entry					Door Clearance	CB Handle									Max. Approx. Shipping Weight
L	M	N	P	R	S	T	U	V	W	RR	SS	TT	UU	VV	Lbs (kg)
5.3 (133)	23.4 (594)	10.0 (254)	1.3 (32)	12.9 (328)	26.4 (669)	1.5 (38)	8.0 (203)	4.8 (121)	6.8 (173)	79.5 (2018)	13.40 (340)	0.8 (19)	1.3 (32)	26.0 (660)	690 (313)

Approximate Dimensions in Inches (mm)

Enclosure Size 5

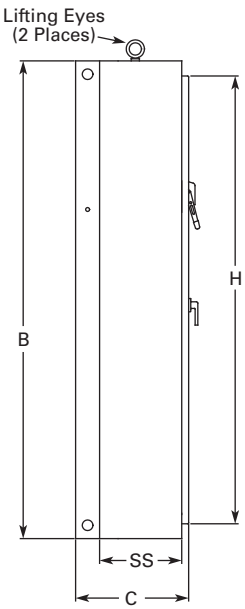

Side View

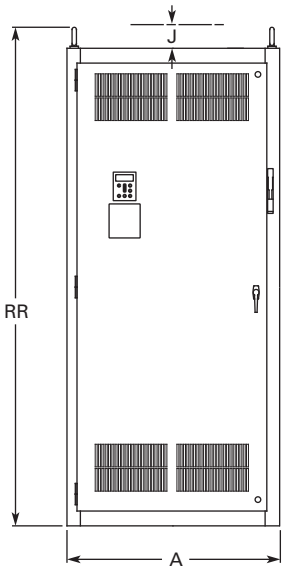

Front View
NEMA Type 1/IP21

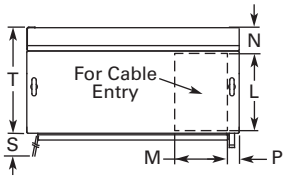

Top View

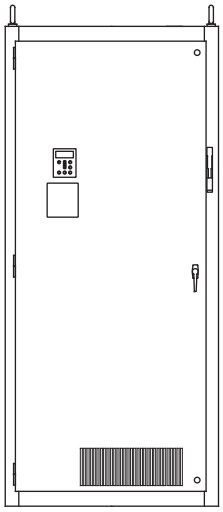

Front View
NEMA Type 12/IP54

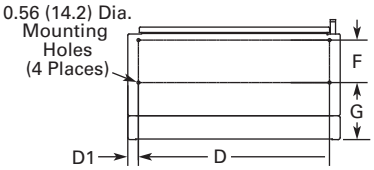

Bottom View

For reference only, dimensions are subject to change.

Wide A	High B	Deep C	Mounting D	D1	E	E1	F	G	G1	Door Height H	Min. Air Space J	K
40.0 (1016)	90.0 (2286)	21.3 (541)	36.0 (914)	2.0 (51)	—	—	8.0 (203)	10.8 (273)	—	84.4 (2143)	4.0 (102)	—

Cable Entry L	M	N	P	R	Door Clearance S	T	U	V	W	RR	SS	TT	UU	VV	Max. Approx. Shipping Weight Lbs (kg)
15.0 (381)	10.0 (254)	4.8 (122)	2.0 (51)	—	36.3 (921)	20.0 (508)	—	—	—	94.0 (2387)	15.5 (394)	—	—	—	1275 (579)

Approximate Dimensions in Inches (mm)

Enclosure Size 7

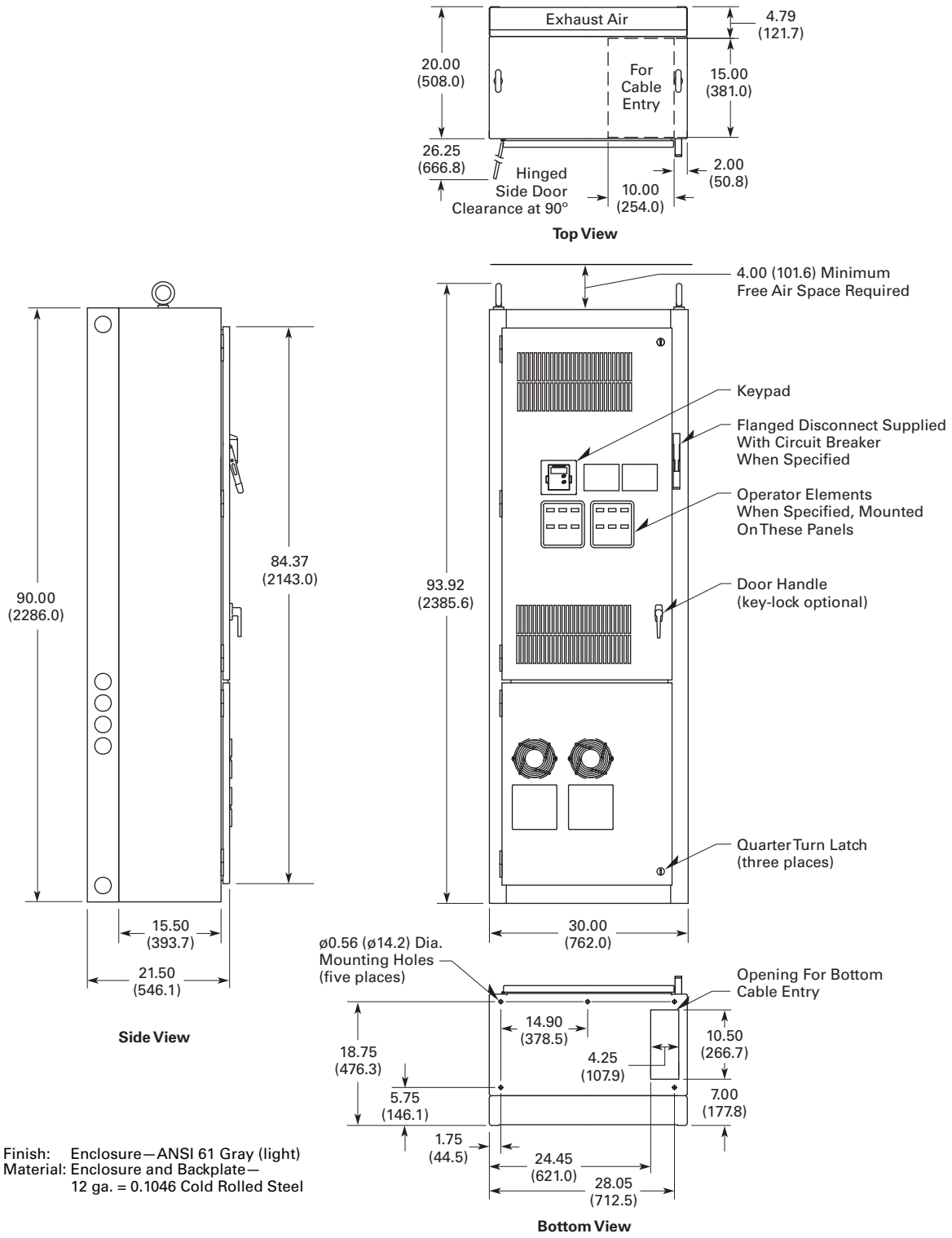

Finish: Enclosure—ANSI 61 Gray (light)
Material: Enclosure and Backplate—
12 ga. = 0.1046 Cold Rolled Steel

Approximate Dimensions in Inches (mm)

Enclosure Size 8

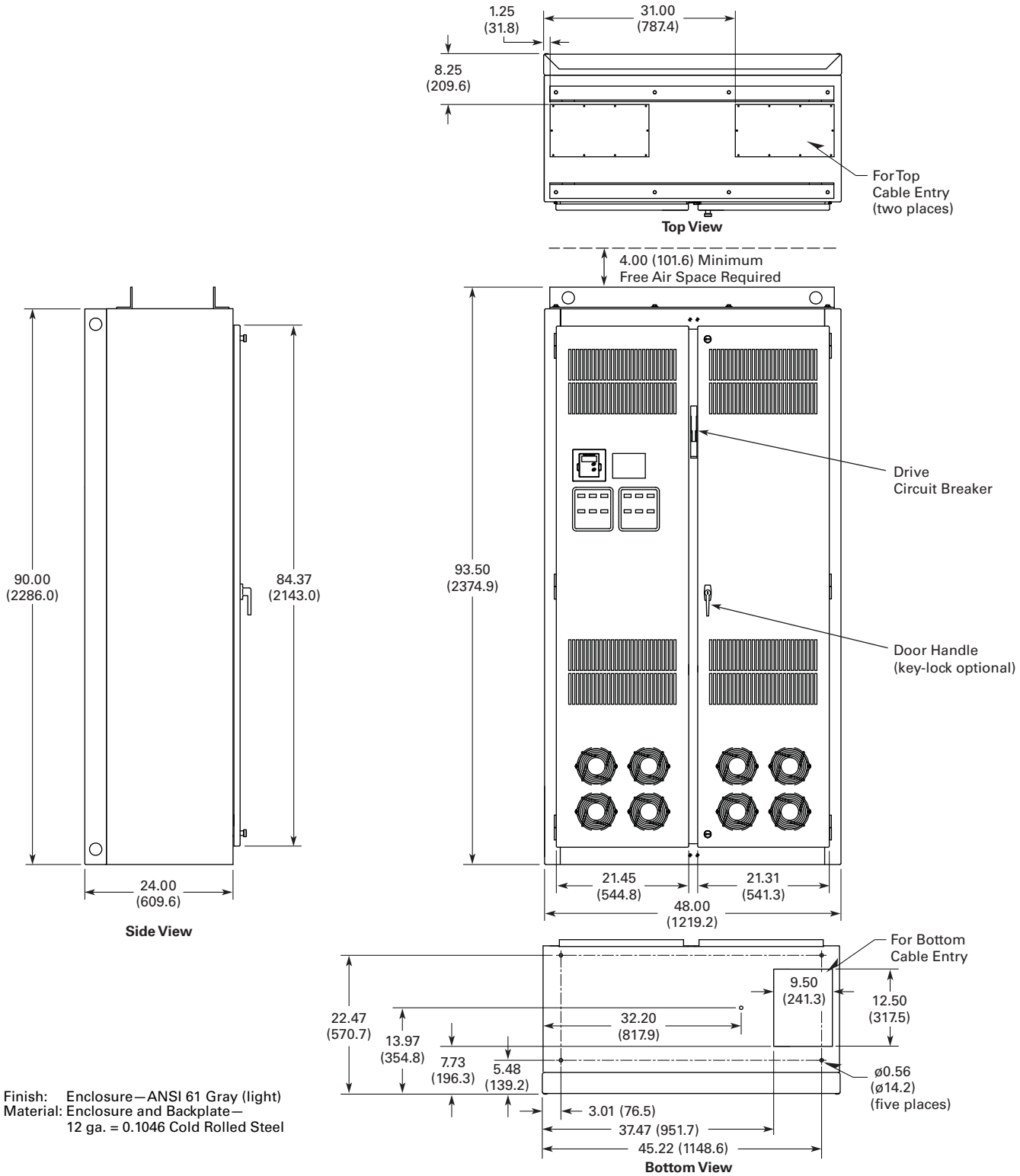

Finish: Enclosure—ANSI 61 Gray (light)
Material: Enclosure and Backplate—
12 ga. = 0.1046 Cold Rolled Steel

Approximate Dimensions in Inches (mm)

Enclosure Size 9

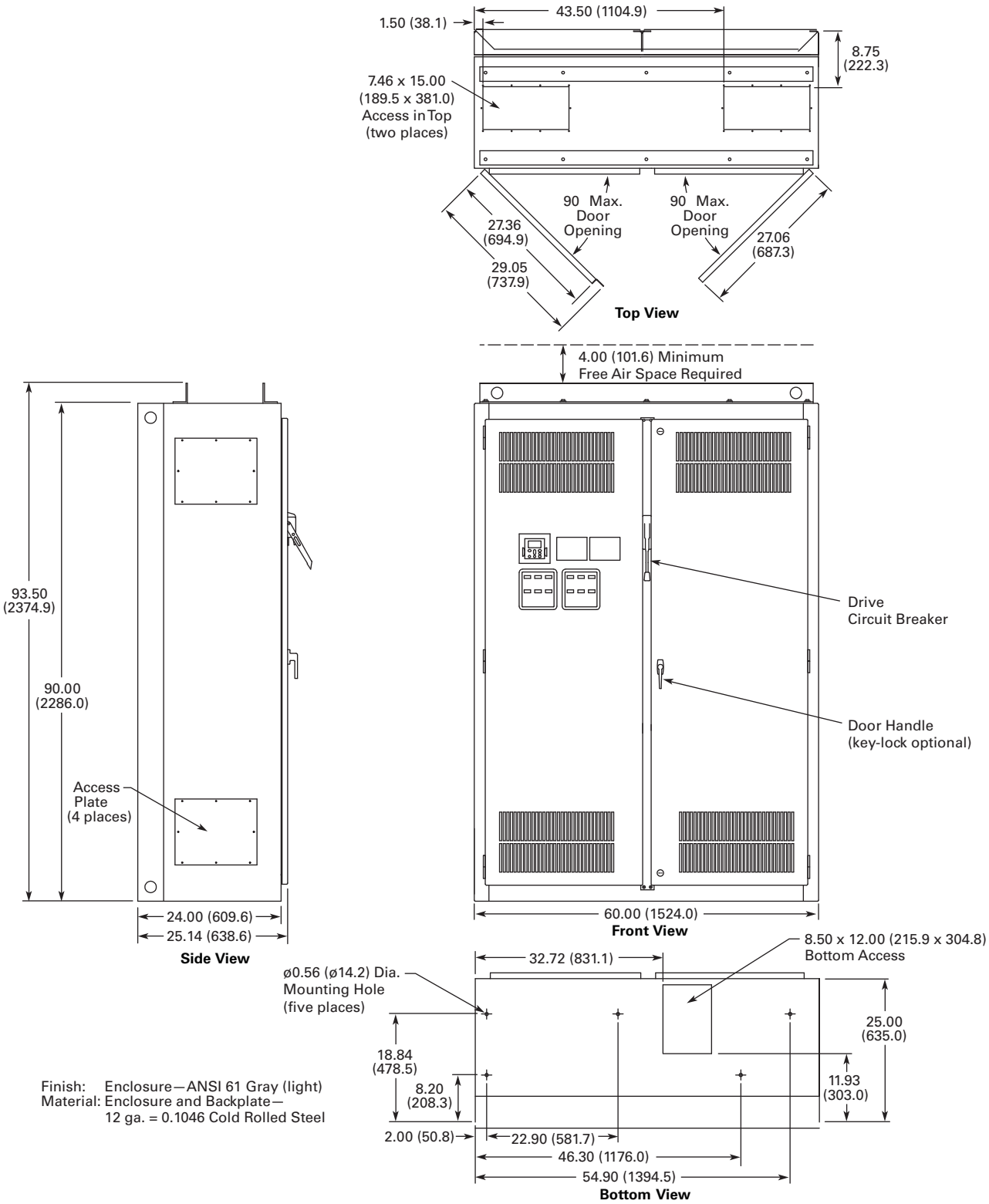

Finish: Enclosure—ANSI 61 Gray (light)
Material: Enclosure and Backplate—
12 ga. = 0.1046 Cold Rolled Steel

Approximate Dimensions in Inches (mm)

Enclosure Size 10

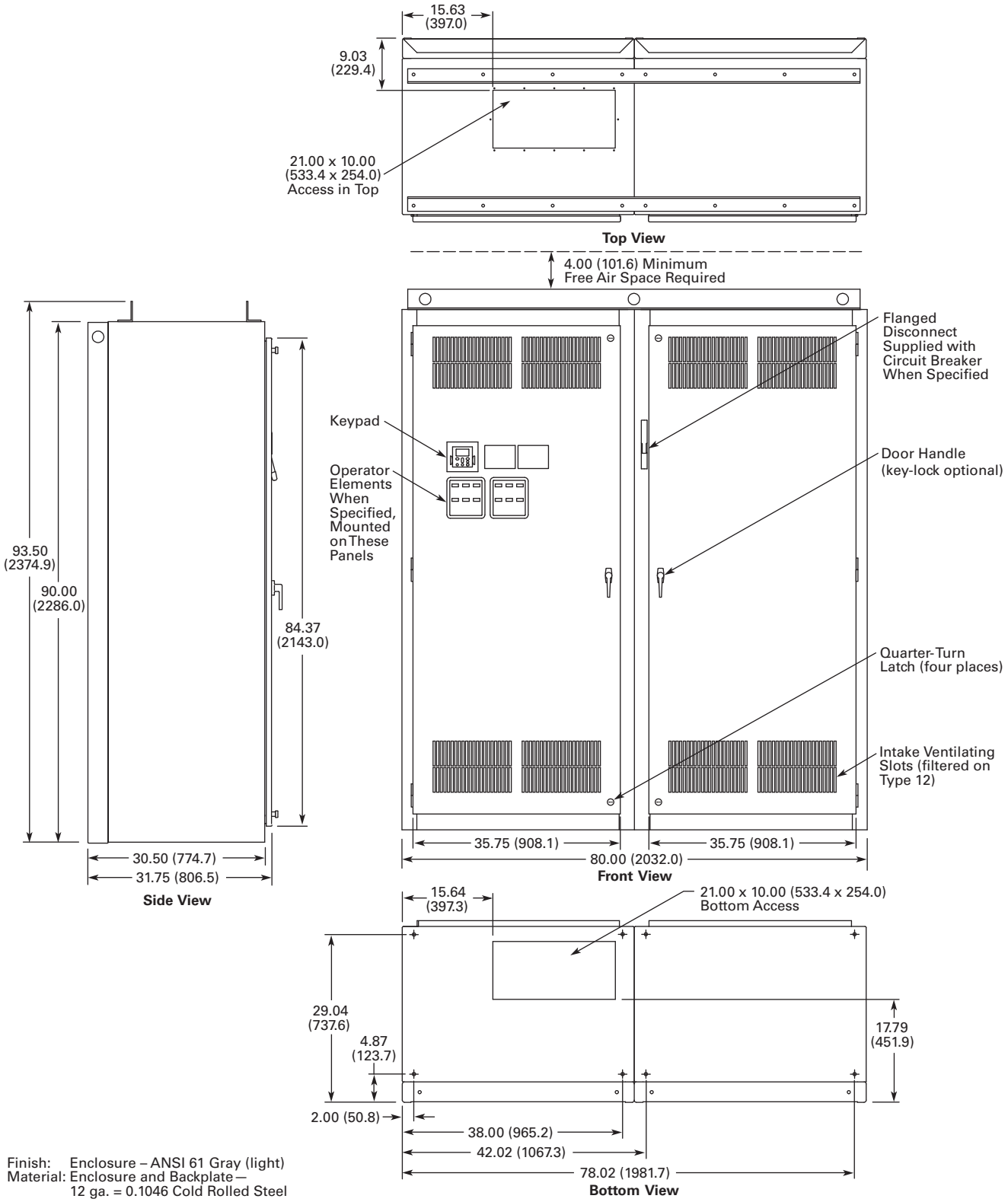

Finish: Enclosure – ANSI 61 Gray (light)
Material: Enclosure and Backplate—
12 ga. = 0.1046 Cold Rolled Steel

LCX Liquid Cooled Adjustable Frequency Drives

Contents

Description	*Page*
LCX Drives	
Catalog Number Selection	**V6-T2-340**
Product Selection	**V6-T2-341**
Options	**V6-T2-344**
Technical Data and Specifications	**V6-T2-345**
Wiring Diagrams	**V6-T2-346**
Dimensions	**V6-T2-348**

Product Description

The LCX Liquid Cooled Drive family continues Eaton's tradition of providing state-of-the-industry products, by taking advantage of liquid cooling technology in lieu of air-cooling techniques.

The LCX drives are liquid-cooled products that utilize potable water or a water-glycol mixture as a cooling medium.

Features and Benefits

- Compact size and low heat transfer rates allow enclosure size to be greatly reduced, which is especially beneficial in UL Type 4X applications
- Design is modular, with control and power modules independent of each other. Connection between power and control modules can be direct or extended via a fiber optic cable
- Same reliable control module and operating system as the SPX air-cooled drives
- CE mark ensures compliance with the Electromagnetic Compatibility Directive (EMC) and the Low Voltage Directive (LVD)
- Reliable drive with over 500,000 hours MTBF based on MIL 217
- Currently supports DeviceNet, PROFIBUS-DP, Modbus RTU and Modbus TCP communication protocols
- Separately mounted line reactor included with AC fed models

Standards and Certifications

- UL
- cUL
- CE
- IEC

Catalog Number Selection

LCX Liquid Cooled Adjustable Frequency Drives

LCX 016 A 0 – 4 A 3 B 2 _ _ _ _ _ _

Product Family

LCX = High performance, liquid-cooled drive

Current Rating

480 V	
016 = 16 A	**385** = 385 A
022 = 22 A	**460** = 460 A
031 = 31 A	**520** = 520 A
038 = 38 A	**590** = 590 A
045 = 45 A	**650** = 650 A
061 = 61 A	**730** = 730 A
072 = 72 A	**820** = 820 A
087 = 87 A	**920** = 920 A
105 = 105 A	**H10** = 1030 A
140 = 140 A	**H11** = 1150 A
168 = 168 A	**H13** = 1370 A
205 = 205 A	**H16** = 1640 A
261 = 261 A	**H20** = 2060 A
300 = 300 A	**H23** = 2300 A
690 V	
170 = 170 A	**590** = 590 A
208 = 208 A	**650** = 650 A
261 = 261 A	**750** = 750 A
325 = 325 A	**820** = 820 A
385 = 385 A	**H10** = 1030 A
416 = 416 A	**H11** = 1180 A
460 = 460 A	**H13** = 1300 A
502 = 502 A	**H15** = 1500 A

Software Series

A = Standard

Enclosure Rating

0 = Open chassis

Voltage Rating

4 = 380–500 V
5 = 520–690 V

Keypad

A = Alphanumeric

Input Options

3 = Three-phase, EMC T
7 = DC Input

Options

List options in alphabetical order.

Extended I/O Card Options

A3 = 2 RO, therm
A4 = Encoder low volt +5 V/15 V/24 V
A5 = Encoder high volt +15 V/24 V
A7 = Dual encoder +15 V/24 V
A8 = 6 DI, 1 DO, 2 AI, 1 AO
AE = Encoder with 2 DOs
B1 = 6 DI, 1 ext +24 Vdc/EXT +24 Vdc
B2 = 1 RO (NC-NO), 1 RO (NO), 1 therm
B4 = 1 AI (mA isolated), 2 AO (mA isolated), 1 ext +24 Vdc/EXT + 24 Vdc
B5 = 3 RO (NO)
B8 = 1 ext +24 Vdc/EXT +24 Vdc, 3 Pt100
B9 = 1 RO (NO), 5 DI 42–240 Vac input
BB = SPI, absolute encoder

Communication Cards

CA = Johnson Controls N2
CI = Modbus TCP
C2 = Modbus
C3 = PROFIBUS DP
C4 = LonWorks
C5 = PROFIBUS DP (D9 Connector)
C6 = CANopen (Slave)
C7 = DeviceNet
C8 = Modbus (D9 Type Connector)
D1 = Adapter
D2 = Adapter
D3 = RS-232 with D9 Connection

Board Modifications

2 = Varnished boards

Brake Chopper Options ①

N = No brake chopper circuit
B = Internal brake chopper

Note

① Brake chopper is only available in 480 V CH3 drives.

Product Selection

LCX Liquid Cooled Drives

380–500 Vac Liquid Cooled Drives

Motor Output Current Thermal, I_{th} (A)	I_L (A)	I_H (A)	kW	Chassis	Catalog Number
16	15	11	7.5	CH3	**LCX016A0-4A3N2**
22	20	15	11	CH3	**LCX022A0-4A3N2**
31	28	21	15	CH3	**LCX031A0-4A3N2**
38	35	25	18.5	CH3	**LCX038A0-4A3N2**
45	41	30	22	CH3	**LCX045A0-4A3N2**
61	55	41	30	CH3	**LCX061A0-4A3N2**
72	65	48	37	CH4	**LCX072A0-4A3N2**
87	79	58	45	CH4	**LCX087A0-4A3N2**
105	95	70	55	CH4	**LCX105A0-4A3N2**
140	127	93	75	CH4	**LCX140A0-4A3N2**
168	153	112	90	CH5	**LCX168A0-4A3N2**
205	186	137	110	CH5	**LCX205A0-4A3N2**
261	237	174	132	CH5	**LCX261A0-4A3N2**
300	273	200	160	CH61	**LCX300A0-4A3N2**
385	350	257	200	CH61	**LCX385A0-4A3N2**
460	418	307	250	CH72	**LCX460A0-4A3N2**
520	473	347	250	CH72	**LCX520A0-4A3N2**
590	536	393	315	CH72	**LCX590A0-4A3N2**
650	591	433	355	CH72	**LCX650A0-4A3N2**
730	664	487	400	CH72	**LCX730A0-4A3N2**
820	745	547	450	CH63	**LCX820A0-4A3N2**
920	836	613	500	CH63	**LCX920A0-4A3N2**
1030	936	687	560	CH63	**LCXH10A0-4A3N2**
1150	1045	766	600	CH63	**LCXH11A0-4A3N2**
1370	1245	913	700	CH74	**LCXH13A0-4A3N2**
1640	1491	1093	900	CH74	**LCXH16A0-4A3N2**
2060	1873	1373	1100	CH74	**LCXH20A0-4A3N2**
2300	2091	1533	1200	CH74	**LCXH23A0-4A3N2**

LCX Liquid Cooled Drives

525–690 Vac Liquid Cooled Drives

Motor Output Current Thermal, I_{th} (A)	I_L (A)	I_H (A)	kW	Chassis	Catalog Number
170	155	113	110	CH61	**LCX170A0-5A3N2**
208	189	139	132	CH61	**LCX208A0-5A3N2**
261	237	174	160	CH72	**LCX261A0-5A3N2**
325	295	217	200	CH72	**LCX325A0-5A3N2**
385	350	257	250	CH72	**LCX385A0-5A3N2**
416	378	277	250	CH72	**LCX416A0-5A3N2**
460	418	307	300	CH72	**LCX460A0-5A3N2**
502	456	335	355	CH72	**LCX502A0-5A3N2**
590	536	393	400	CH63	**LCX590A0-5A3N2**
650	591	433	450	CH63	**LCX650A0-5A3N2**
750	682	500	500	CH63	**LCX750A0-5A3N2**
820	745	547	560	CH74	**LCX820A0-5A3N2**
920	836	613	650	CH74	**LCX920A0-5A3N2**
1030	936	687	700	CH74	**LCXH10A0-5A3N2**
1180	1073	787	800	CH74	**LCXH11A0-5A3N2**
1300	1182	867	900	CH74	**LCXH13A0-5A3N2**
1500	1364	1000	1000	CH74	**LCXH15A0-5A3N2**

540–675 Vdc Liquid Cooled Inverter Units

Drive Output Current Thermal I_{th} (A)	Rated Cont. I_L (A)	Rated Cont. I_H (A)	Motor Output Power Optimum Motor at I_{th} 400 V (kW)	Optimum Motor at I_{th} 500 V (kW)	Power Loss c/a/T (kW)	Chassis	Catalog Number
16	15	11	7.5	11	0.4/0.2/**0.6**	CH3	**LCX016A0-4A7B2**
22	20	15	11	15	0.5/0.2/**0.7**	CH3	**LCX022A0-4A7B2**
31	28	21	15	18.5	0.7/0.2/**0.9**	CH3	**LCX031A0-4A7B2**
38	35	25	18.5	22	0.8/0.2/**1.0**	CH3	**LCX038A0-4A7B2**
45	41	30	22	30	1.0/0.3/**1.3**	CH3	**LCX045A0-4A7B2**
61	55	41	30	37	1.3/0.3/**1.5**	CH3	**LCX061A0-4A7B2**
72	65	48	37	45	1.2/0.3/**1.5**	CH4	**LCX072A0-4A7N2**
87	79	58	45	55	1.5/0.3/**1.8**	CH4	**LCX087A0-4A7N2**
105	95	70	55	75	1.8/0.3/**2.1**	CH4	**LCX105A0-4A7N2**
140	127	93	75	90	2.3/0.3/**2.6**	CH4	**LCX140A0-4A7N2**
168	153	112	90	110	2.5/0.3/**2.8**	CH5	**LCX168A0-4A7N2**
205	186	137	110	132	3.0/0.4/**3.4**	CH5	**LCX205A0-4A7N2**
261	237	174	132	160	4.0/0.4/**4.4**	CH5	**LCX261A0-4A7N2**
300	273	200	160	200	4.5/0.4/**4.9**	CH61	**LCX300A0-4A7N2**
385	350	257	200	250	5.5/0.5/**6.0**	CH61	**LCX385A0-4A7N2**
460	418	307	250	315	5.5/0.5/**6.0**	CH62	**LCX460A0-4A7N2**
520	473	347	250	355	6.5/0.5/**7.0**	CH62	**LCX520A0-4A7N2**
590	536	393	315	400	7.5/0.6/**8.1**	CH62	**LCX590A0-4A7N2**

LCX Liquid Cooled Drives

540–675 Vdc Liquid Cooled Inverter Units, continued

Drive Output Current Thermal I_{th} (A)	Rated Cont. I_L (A)	Rated Cont. I_H (A)	Motor Output Power Optimum Motor at I_{th} 400 V (kW)	Motor Output Power Optimum Motor at I_{th} 500 V (kW)	Power Loss c/a/T (kW)	Chassis	Catalog Number
650	591	433	355	450	8.5/0.6/**9.1**	CH62	**LCX650A0-4A7N2**
730	664	487	400	500	10.0/0.7/**10.7**	CH62	**LCX730A0-4A7N2**
820	745	547	450	560	12.5/0.8/**13.3**	CH63	**LCX820A0-4A7N2**
920	836	613	500	600	14.4/0.9/**15.3**	CH63	**LCX920A0-4A7N2**
1030	936	687	560	700	16.5/1.0/**17.5**	CH63	**LCXH10A0-4A7N2**
1150	1045	766	600	750	18.4/10.1/**19.5**	CH63	**LCXH11A0-4A7N2**
1370	1245	913	700	900	15.5/1.0/**16.5**	CH64	**LCXH13A0-4A7N2**
1640	1491	1093	900	1100	19.5/1.2/**20.7**	CH64	**LCXH16A0-4A7N2**
2060	1873	1373	1100	1400	26.5/1.5/**28.0**	CH64	**LCXH20A0-4A7N2**
2300	2091	1533	1250	1500	29.6/1.7/**31.3**	CH64	**LCXH23A0-4A7N2**
2470	2245	1647	1300	1600	36.0/2.0/**38.0**	2*CH64	**LCXH24A0-4A7N2**
2950	2681	1967	1550	1950	39.0/2.4/**41.4**	2*CH64	**LCXH29A0-4A7N2**
3710	3372	2473	1950	2450	48.0/2.7/**50.7**	2*CH64	**LCXH37A0-4A7N2**
4140	3763	2760	2150	2700	53.0/3.0/**66.0**	2*CH64	**LCXH41A0-4A7N2**

710–930 Vdc Liquid Cooled Inverter Unit

Drive Output Current Thermal I_{th} (A)	Rated Cont. I_L (A)	Rated Cont. I_H (A)	Motor Output Power Optimum Motor at I_{th} 400 V (kW)	Motor Output Power Optimum Motor at I_{th} 500 V (kW)	Power Loss c/a/T (kW)	Chassis	Catalog Number
170	155	113	110	160	4.5/0.2/**4.7**	CH61	**LCX170A0-5A7N2**
208	189	139	132	200	5.5/0.3/**5.8**	CH61	**LCX208A0-5A7N2**
261	237	174	160	250	5.5/0.3/**5.8**	CH61	**LCX261A0-5A7N2**
325	295	217	200	300	6.5/0.3/**6.8**	CH62	**LCX325A0-5A7N2**
385	350	257	250	355	7.5/0.4/**7.9**	CH62	**LCX385A0-5A7N2**
416	378	277	250	355	8.0/0.4/**8.4**	CH62	**LCX416A0-5A7N2**
460	418	307	300	400	8.5/0.4/**8.9**	CH62	**LCX460A0-5A7N2**
502	456	335	355	450	10.0/0.5/**10.5**	CH62	**LCX502A0-5A7N2**
590	536	393	400	560	10.0/0.5/**10.5**	CH63	**LCX590A0-5A7N2**
650	591	433	450	600	13.5/0.7/**14.2**	CH63	**LCX650A0-5A7N2**
750	682	500	500	700	16.0/0.8/**16.8**	CH63	**LCX750A0-5A7N2**
820	745	547	560	800	16.0/0.8/**16.8**	CH64	**LCX820A0-5A7N2**
920	836	613	650	850	18.0/0.9/**18.9**	CH64	**LCX920A0-5A7N2**
1030	936	687	700	1000	19.0/1.0/**20.0**	CH64	**LCXH10A0-5A7N2**
1180	1073	787	800	1100	21.0/10.1/**20.1**	CH64	**LCXH11A0-5A7N2**
1300	1182	867	900	1200	27.0/1.4/**28.4**	CH64	**LCXH13A0-5A7N2**
1500	1364	1000	1050	1400	32.0/1.6/**33.6**	CH64	**LCXH15A0-5A7N2**
1700	1545	1133	1150	1550	N/A	CH64	**LCXH17A0-5A7N2**
1850	1682	1233	1250	1650	34.2/1.8/**36.0**	2*CH64	**LCXH18A0-5A7N2**
2120	1927	1413	1450	1900	37.8/2.0/**39.8**	2*CH64	**LCXH21A0-5A7N2**
2340	2127	1560	1600	2100	48.6/2.5/**51.1**	2*CH64	**LCXH23A0-5A7N2**
2700	2455	1800	1850	2450	57.6/3.0/**60.6**	2*CH64	**LCXH27A0-5A7N2**
3100	2818	2066	2150	2800	N/A	2*CH64	**LCXH31A0-5A7N2**

Options

9000X Series Option Board Kits

The 9000X Series drives can accommodate a wide selection of expander and adapter option boards to customize the drive for your application needs. The drive's control unit is designed to accept a total of five option boards.

The 9000X Series factory installed standard board configuration includes an A9 I/O board and an A2 relay output board, which are installed in slots A and B.

Option Boards

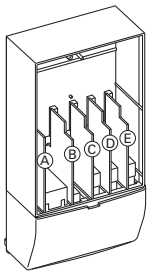

Option Board Kits

Option Kit Description ①	Allowed Slot Locations ②	Field Installed Catalog Number	Factory Installed Option Designator	SVX Ready Programs Basic	Local/ Remote	Standard	MSS	PID	Multi-P.	PFC
Standard I/O Cards										
2 RO (NC-NO)	B	**OPTA2**	—	■	■	■	■	■	■	■
6 DI, 1 DO, 2 AI, 1 AO, 1 +10 Vdc ref, 2 ext +24 Vdc/EXT +24 Vdc	A	**OPTA9**	—	■	■	■	■	■	■	■
Extended I/O Cards										
2 RO, therm	B	**OPTA3**	**A3**	—	■	■	■	■	■	■
Encoder low Volt +5 V/15 V/24 V	C	**OPTA4**	**A4**	—	■	■	■	■	■	■
Encoder high Volt +15 V/24 V	C	**OPTA5**	**A5**	—	■	■	■	■	■	■
Dual encoder +15 V/24 V	C	**OPTA7**	**A7**	—	■	■	■	■	■	■
6 DI, 1 DO, 2 AI, 1 AO	A	**OPTA8**	**A8**	—	■	■	■	■	■	■
3 DI (encoder 10–24 V), out +15 V/+24 V, 2 DO (pulse+direction)—SPX only	C	**OPTAE**	**AE**	■	■	■	■	■	■	■
6 DI, 1 ext +24 Vdc/EXT +24 Vdc	B, C, **D**, E	**OPTB1**	**B1**	—	—	—	—	—	■	■
1 RO (NC-NO), 1 RO (NO), 1 therm	B, C, **D**, E	**OPTB2**	**B2**	—	—	—	—	—	■	■
1 AI (mA isolated), 2 AO (mA isolated), 1 ext +24 Vdc/EXT +24 Vdc	B, C, **D**, E	**OPTB4**	**B4**	—	■	■	■	■	■	■
3 RO (NO)	B, C, **D**, E	**OPTB5**	**B5**	—	—	—	—	—	■	■
1 ext +24 Vdc/EXT +24 Vdc, 3 Pt100	B, C, **D**, E	**OPTB8**	**B8**	—	—	—	—	—	—	—
1 RO (NO), 5 DI 42–240 Vac input	B, C, **D**, E	**OPTB9**	**B9**	—	—	—	—	—	■	■
SPI, absolute encoder	C	**OPTBB**	**BB**	—	—	—	—	—	—	—
Communication Cards ③										
Modbus	D, **E**	**OPTC2**	**C2**	■	■	■	■	■	■	■
Johnson Controls N2	D, **E**	**OPTC2**	**CA**	—	—	—	—	—	—	—
PROFIBUS DP	D, **E**	**OPTC3**	**C3**	■	■	■	■	■	■	■
LonWorks	D, **E**	**OPTC4**	**C4**	■	■	■	■	■	■	■
PROFIBUS DP (D9 connector)	D, **E**	**OPTC5**	**C5**	■	■	■	■	■	■	■
CANopen (slave)	D, **E**	**OPTC6**	**C6**	■	■	■	■	■	■	■
DeviceNet	D, **E**	**OPTC7**	**C7**	■	■	■	■	■	■	■
Modbus (D9 Type connector)	D, **E**	**OPTC8**	**C8**	■	■	■	■	■	■	■
Modbus TCP	D, **E**	**OPTCI**	**CI**	■	■	■	■	■	■	■
Adapter—SPX only	D, **E**	**OPTD1**	**D1**	■	■	■	■	■	■	■
Adapter—SPX only	D, **E**	**OPTD2V**	**D2**	■	■	■	■	■	■	■
RS-232 with D9 connection	D, **E**	**OPTD3**	**D3**	■	■	■	■	■	■	■
Keypad										
9000X Series standard keypad	—	**KEYPAD-STD**	—	—	—	—	—	—	—	■
9000X Series remote mount keypad unit (keypad not included, includes 10 ft cable, keypad holder, mounting hardware)	—	**OPTRMT-KIT-9000X**	—	—	—	—	—	—	—	—

Notes

① AI = Analog Input; AO = Analog Output, DI = Digital Input, DO = Digital Output, RO = Relay Output

② Option card must be installed in one of the slots listed for that card. Slot indicated in bold is the preferred location.

③ OPTC2 is a multi-protocol option card.

Technical Data and Specifications

LCX Products

Description	Specification
General Specifications	
Line voltage	400 to 500 Vac; 525 to 690 Vac; (–10% to 10%) 465 to 800 Vdc; 640 to 1100 Vdc; (–0 to 0%)
Frequency	50/60 Hz
Line voltage variation	–10% to 10%
Input frequency variation	45–66 Hz
Continuous output current	Rated current at incoming cooling liquid temperature of 30 °C
Output frequency	0–320 Hz
Drive efficiency	>95%
Power factor (displacement)	0.96
Liquid coolant pressure	87 psi (6 bar) maximum
Liquid coolant flow rate	1.3 to 7.9 gal./min. (5 to 30 liter/min.) minimum depending on drive size
Liquid coolant fittings	Standard quick connect, NPT
Operating ambient temperature	–10/50 °C
Storage temperature	–40/70 °C
Humidity	95% maximum (non-condensing)
Altitude	3300 ft (1000 m) maximum without derating
Enclosure	IP00
Warranty	Standard terms, 3 years with certified start-up
Mains Connection	
Input voltage (V_{in})	400–500 Vac; 525–690 Vac; (–10%–10%) 465–800 Vdc; 640–1100 Vdc; (–0–0%)
Input frequency (f_{in})	45–66 Hz
Connection to mains	Once per minute or less (normal case)
Motor Connection	
Output voltage	0–V_{in}
Continuous output current	Rated current at nominal inflow cooling water temperature of 30 °C; Overload 2 sec./20 sec.
Starting current	Rated current at 2 sec./20 sec. if output frequency <30 Hz and temperature of heatsink <149 °F (65 °C)
Output frequency	0–320 Hz (standard); 7200 Hz (special software)
Frequency resolution	Application dependent
Control Characteristics	
Control method	Frequency control (V/f) Open loop: Sensorless vector control Closed loop: Frequency control Closed loop: Vector control
Switching frequency 480 V ①	Adjustable with parameter 2.6.9 Up to and including 61-Amp size: 1–16 kHz (factory default, 10 kHz) From 72-Amp size: 1–12 kHz (factory default, 3.6 kHz)
575 V ①	1–6 kHz (factory default, 1.5 kHz)
Frequency reference	Analog input: resolution 0.1% (10 bits); accuracy ±1% Panel reference: resolution 0.01 Hz
Field weakening point	30–320 Hz
Acceleration time	0.1–3000 seconds
Deceleration time	0.1–3000 seconds
Braking torque	DC brake: 30% x T_n (without brake option)

Description	Specification
Ambient Conditions	
Ambient operating temperature	14 °F (–10 °C), no frost to 122 °F (50 °C) at I_{th} 122 to 158 °F (50 to 70 °C), derating required
Storage temperature	–40 °F to 158 °F (–40 to 70 °C) No liquid in heatsink under 32 °F (0 °C)
Relative humidity	5–96% RH, noncondensing, no dripping water
Air quality	Chemical vapors: IEC 721-3-3, unit in operation, class 3C2 Mechanical particles: IEC 721-3-3, unit in operation, class 3S2 (no conductive dust allowed); No corrosive gases
Altitude	Up to 1,000 m: 100% load capacity (no derating) Above 1,000 m: Derating of 1% per each 100 m required
Vibration	EN 50178, EN 60068-2-6; 5–150 Hz Displacement amplitude: 0.25 mm (peak) at 3–31 Hz Max. acceleration amplitude: 1G at 31–150 Hz
Shock	EN 50178, EN 60068-2-27, UPS drop test (for applicable UPS weights) Storage and shipping: Max. 15 g, 11 ms (in package)
Enclosure class	IP00 open frame standard in entire kW/hp range
EMC	
Immunity	Fulfils all EMC immunity requirements
Emissions	EMC level N; EMC level T for IT networks
Safety	
Approvals	EN 50178, EN 60204-1, CE, UL, CUL, FI, GOST R, IEC 61800-5 (See unit nameplate for more detailed approvals.)
Control Connections	
Analog input voltage	0 to +10 V, R_i = 200 kohm (–10 V to +10 V joystick control) Resolution 0.1%; accuracy ±1%
Analog input current	0(4)–20 mA, R_i = 250 ohm differential
Digital inputs	6 positive or negative logic; 18–24 Vdc
Auxiliary voltage	+24 V, ±15%, max. 250 mA
Output reference voltage	+10 V, +3%, max. load 10 mA
Analog output	0(4)–20 mA, R_L max. 500 ohm Resolution 10 bits; accuracy ±2%
Digital outputs	Open collector output, 50 mA/48V
Relay outputs	Two programmable change-over relay outputs Switching capacity: 24 Vdc/8 A, 250 Vac/8 A, 125 Vdc/0.4 A Min. switching load: 5 V/10 mA

Note

① Derating required if higher switching frequency than the default is used.

LCX Products, continued

Description	Specification
Protections	
Overvoltage protection	
480 V	911 V
575 V	1200 V
Undervoltage protection	
480 V	333 V
575 V	461 V
Ground fault protection	In case of ground fault in motor or motor cable, only the drive is protected
Mains supervision	Trips if any of the input phases are missing (drives only)
Motor phase supervision	Trips if any of the output phases are missing
Unit overtemperature protection	
Alarm limit	149 °F (65 °C) for heatsink, 158 °F (70 °C) for circuit boards
Trip limit	158 °F (70 °C) for heatsink, 185 °F (85 °C) for circuit boards

Description	Specification
Protections, continued	
Overcurrent protection	Yes
Motor overload protection	Yes
Motor stall protection	Yes
Motor underload protection	Yes
Short-circuit protection	Yes (+24 V and +10 V reference voltages)
Liquid Cooling	
Allowed cooling agents	Drinking water Water-glycol mixture
Temperature of cooling agent	32 to 86 °F (0 to 30 °C) at I_{th} for input; 86 to 149 °F (30 to 65 °C) Max. temperature rise during circulation: 9 °F (5 °C), no condensation allowed
System max. working pressure	87 psi (6 bar)
System max. peak pressure	580 psi (40 bar)
Pressure loss (at nominal flow)	Varies according to size

Wiring Diagrams

Cooling System Diagrams

Example of a Typical Cooling System

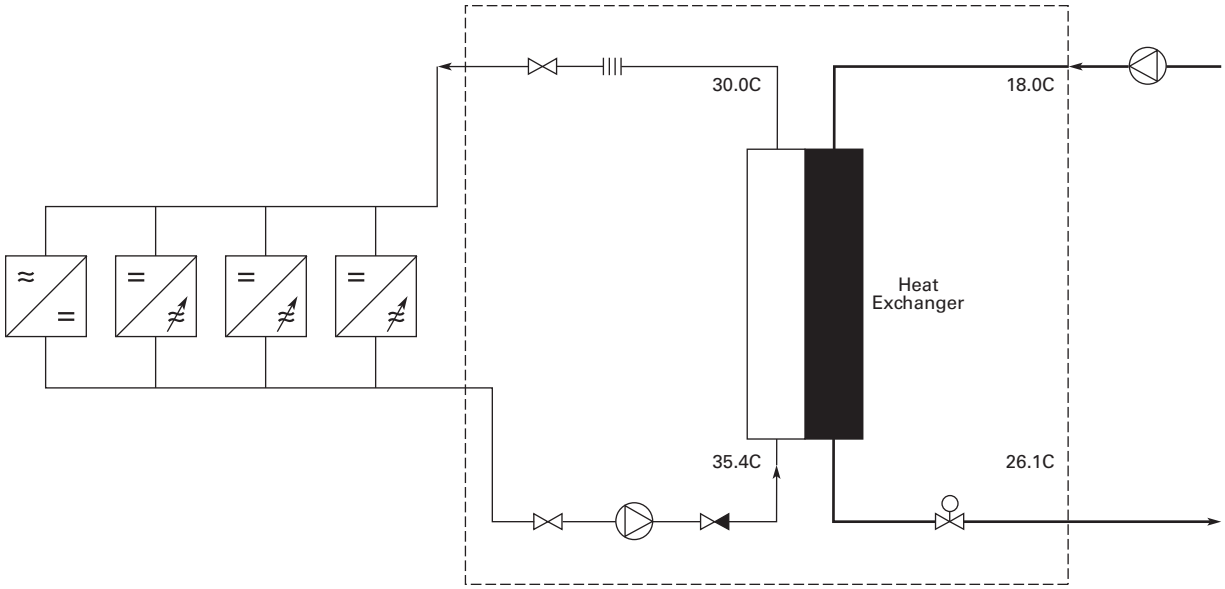

Example PI-Diagram of a Typical Cooling System and Connections

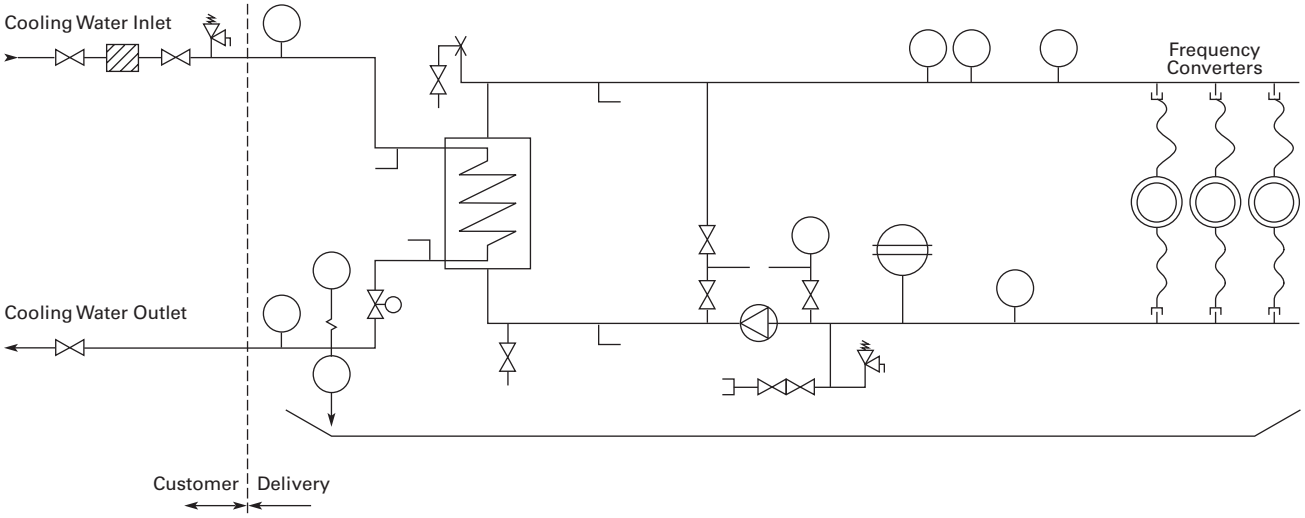

I/O Board Diagrams

A9 Option Board Control Wiring

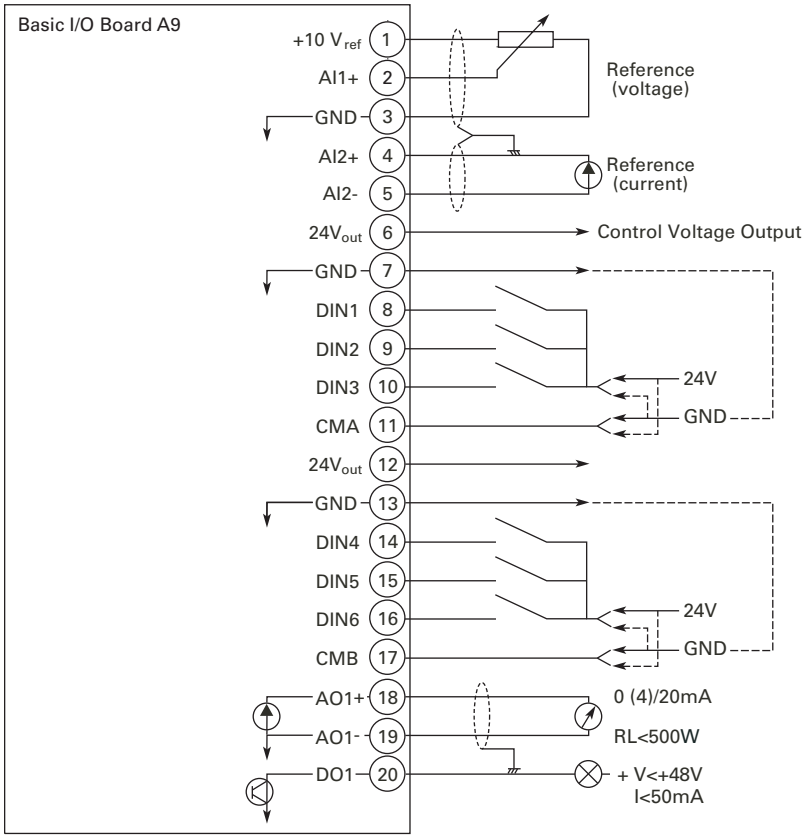

Dotted lines indicate the connections for inverted signals

A2 Option Board Wiring

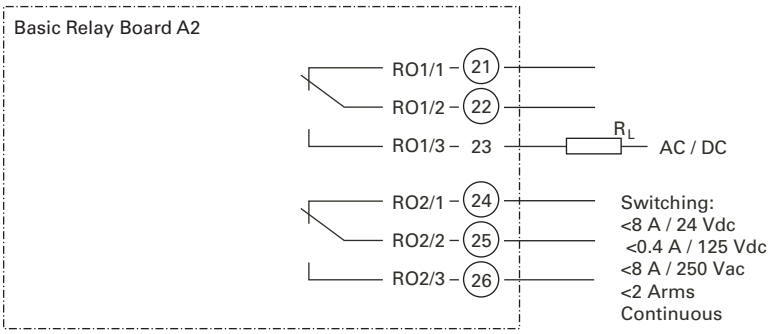

Dimensions

Approximate Dimensions in Inches (mm)

LCX Drives

Chassis Size, CH3

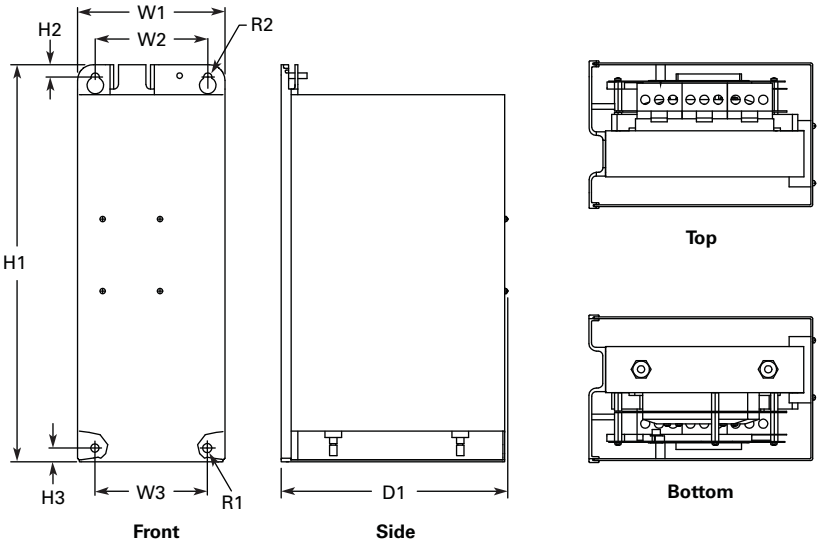

Voltage	Amps	H1	H2	H3	D1	W1	W2	W3	R1 Dia.	R2 Dia.	Weight Lbs (kg)
380–500 Vac	16–61	16.97 (431.0)	0.53 (13.5)	0.59 (15.0)	9.69 (246.0)	6.30 (160.0)	4.80 (122.0)	4.80 (122.0)	0.39 (10.0)	0.35 (9.0)	66 (30)

Approximate Dimensions in Inches (mm)

Chassis Size, CH4

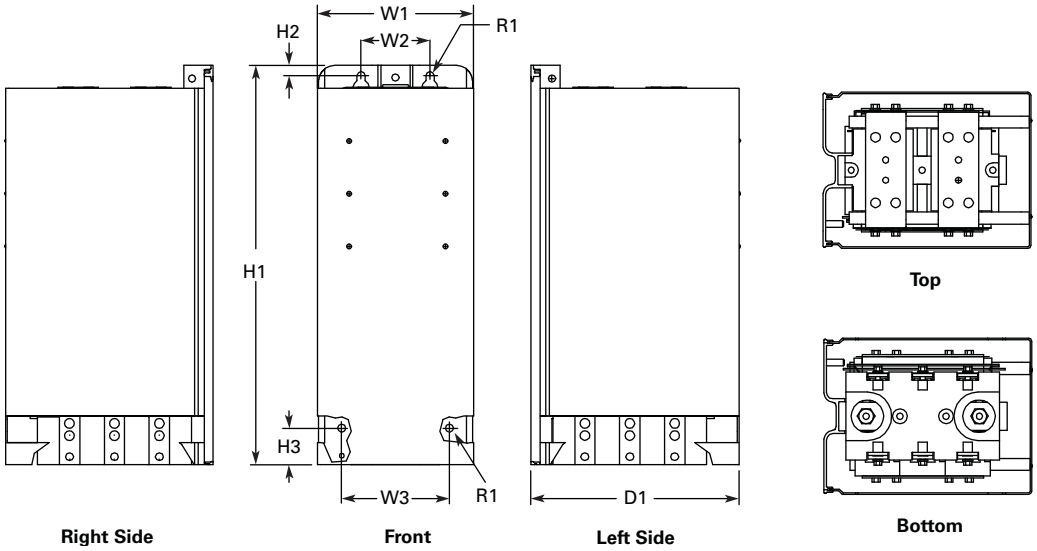

Voltage	Amps	H1	H2	H3	D1	W1	W2	W3	R1 Dia.	R2 Dia.	Weight Lbs (kg)
380–500 Vac	72–140	19.41 (493.0)	0.49 (12.5)	1.77 (45.0)	10.14 (257.5)	7.60 (193.0)	3.35 (85.0)	5.24 (133.0)	0.39 (10.0)	—	77 (35)

Chassis Size, CH5

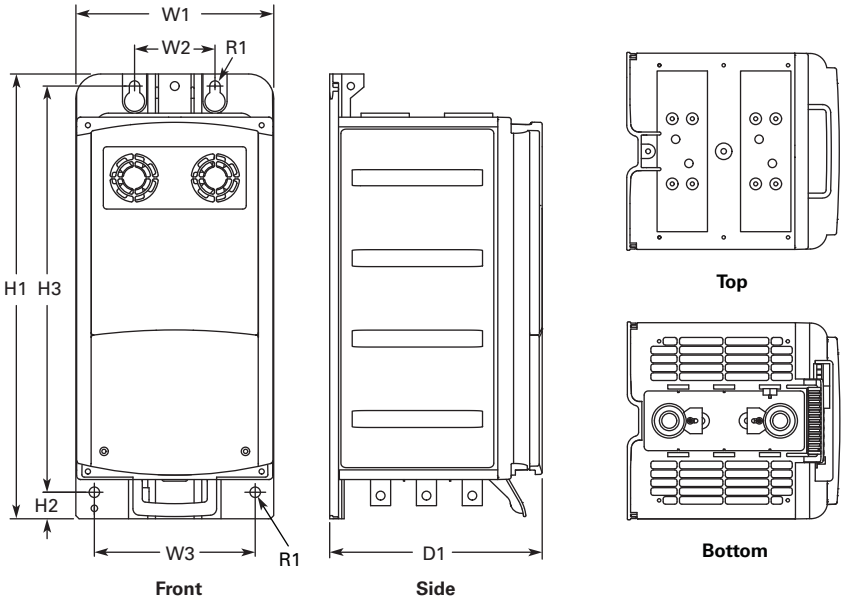

Voltage	Amps	H1	H2	H3	D1	W1	W2	W3	R1 Dia.	R2 Dia.	Weight Lbs (kg)
380–500 Vac	168–261	21.77 (553.0)	1.30 (33.0)	19.88 (505.0)	10.39 (264.0)	9.69 (246)	3.94 (100.0)	7.87 (200.0)	0.51 (13.0)	—	88 (40)

Approximate Dimensions in Inches (mm)

Chassis Size, CH61

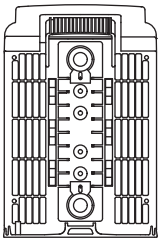

Top

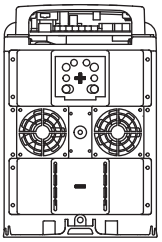

Bottom

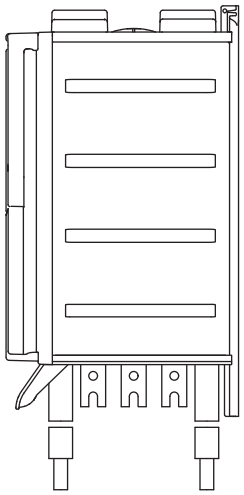

Right Side

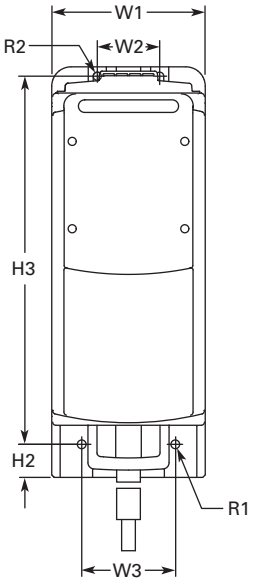

Front

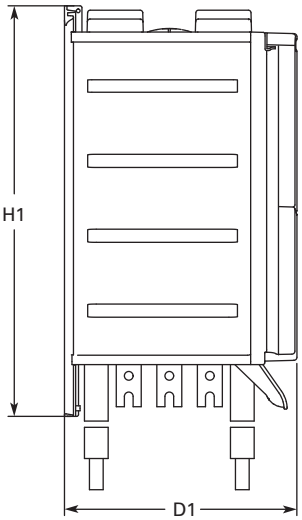

Left Side

Voltage	Amps	H1	H2	H3	D1	W1	W2	W3	R1 Dia.	R2 Dia.	Weight Lbs (kg)
380–500 Vac	300–385	25.91 (658.0)	2.09 (53.0)	23.23 (590.0)	14.69 (373.0)	9.69 (246.0)	3.94 (100.0)	5.91 (150.0)	0.55 (14.0)	0.51 (13.0)	121 (55)
525–690 Vac	170–208										

Liquid-Cooled Inverter—Chassis Size, CH62

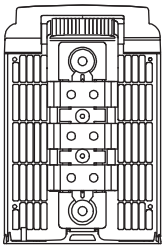

Top

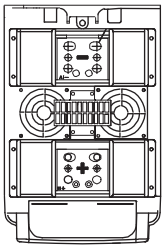

Bottom

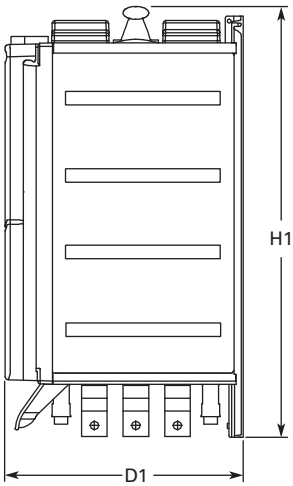

Side

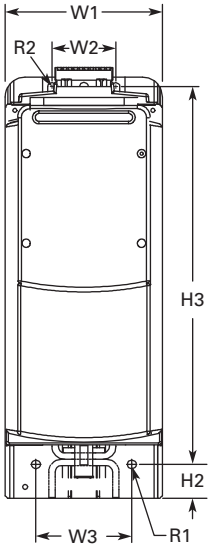

Front

Voltage	Amps	H1	H2	H3	D1	W1	W2	W3	R1 Dia.	R2 Dia.
540–675 Vdc	460–730	26.50 (673)	2.0 (53)	23.23 (590)	14.69 (373)	9.69 (246)	3.94 (100)	5.91 (150)	0.55 (14)	0.51 (13)
710–930 Vdc	325–502									

Approximate Dimensions in Inches (mm)

Chassis Size, CH63

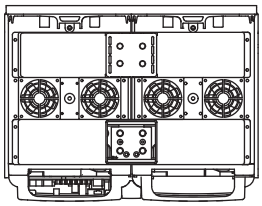

Top

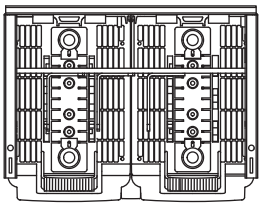

Bottom

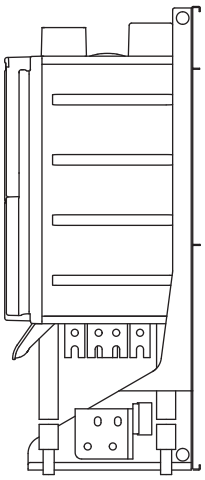

Right Side

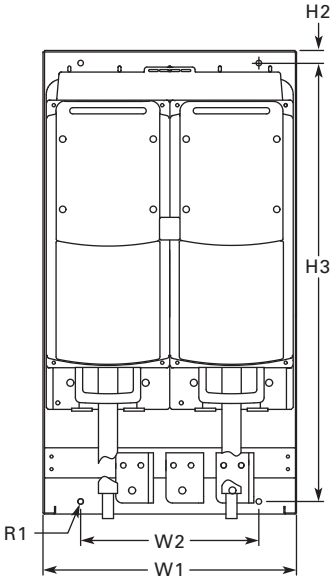

Front

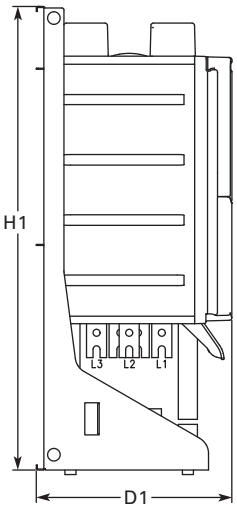

Left Side

Voltage	Amps	H1	H2	H3	D1	W1	W2	R1 Dia.	Weight Lbs (kg)
380–500 Vac	820–1030	36.36 (923.5)	0.91 (23.0)	34.39 (873.5)	15.35 (390.0)	19.88 (505.0)	13.98 (355.0)	0.43 (11.0)	264 (120)
525–690 Vac	590–750								

Approximate Dimensions in Inches (mm)

Liquid-Cooled Inverter with Mounting Bracket, Chassis Size CH64, IP90

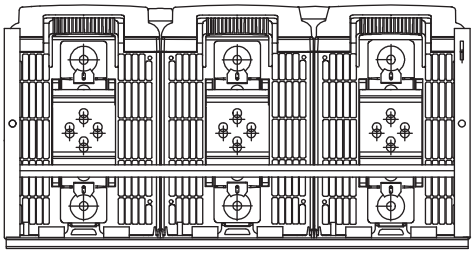

Bottom

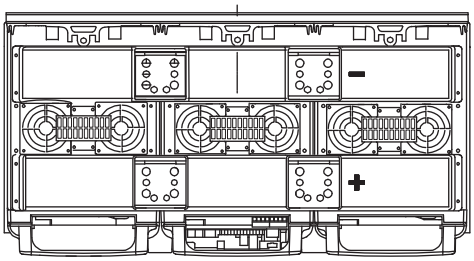

Top

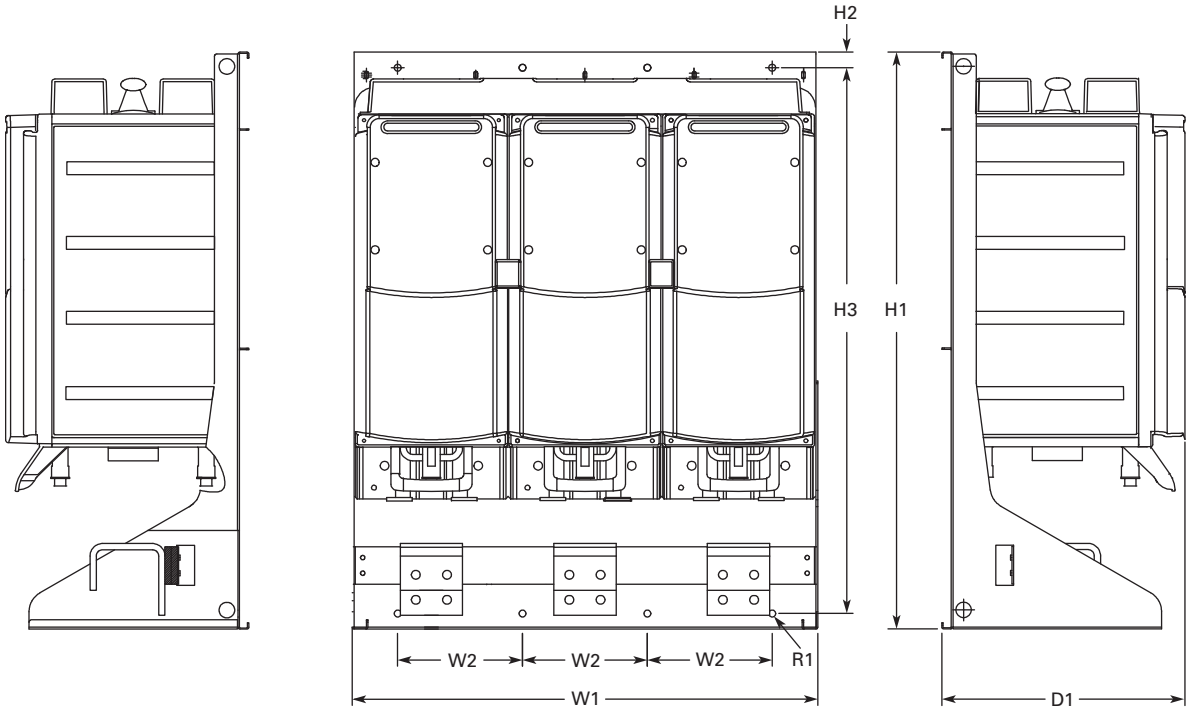

Right Side Front Left Side

Voltage	Amps	H1	H2	H3	D1	W1	W2	R1 Dia.
540–675 Vdc	1370–4140	36.38 (924)	1.03 (26)	34.37 (873)	15.35 (390)	29.37 (746)	7.87 (200)	0.43 (11)
710–930 Vdc	820–3100							

Approximate Dimensions in Inches (mm)

Chassis Size, CH72

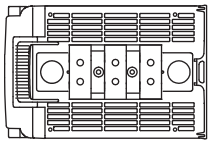

Top

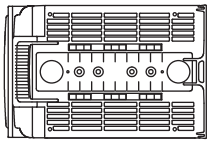

Bottom

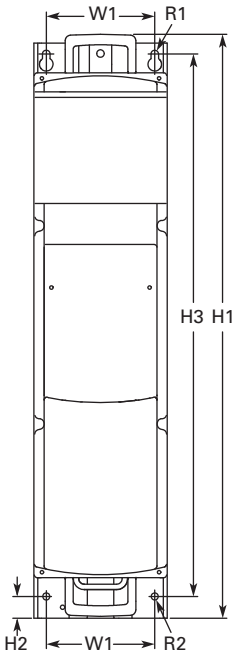

Front

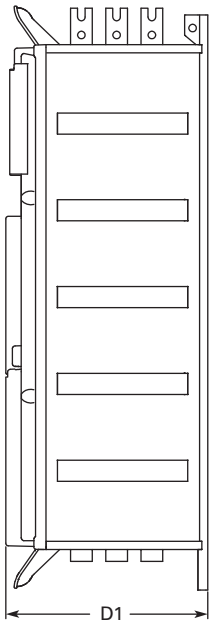

Side

Voltage	Amps	H1	H2	H3	D1	W1	R1 Dia.	R2 Dia.	Weight Lbs (kg)
380–500 Vac	460–730	42.38 (1076.5)	1.57 (40.0)	39.37 (1000.0)	14.65 (372.0)	7.87 (200.0)	0.55 (14.0)	0.51 (13.0)	198 (90)
525–690 Vac	261–502								

Approximate Dimensions in Inches (mm)

Chassis Size, CH74

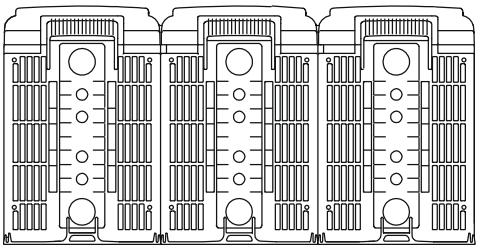

Top

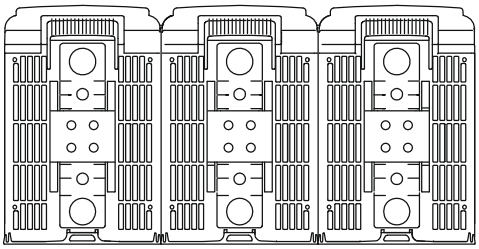

Bottom

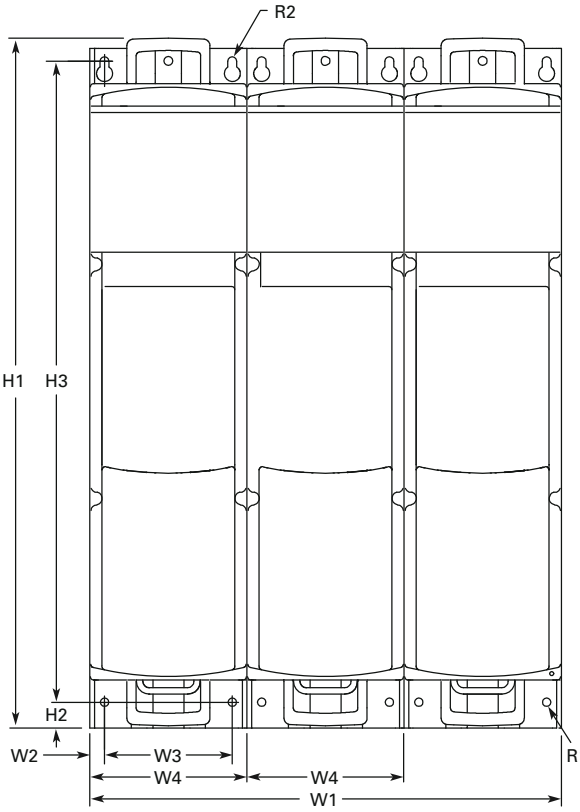

Front

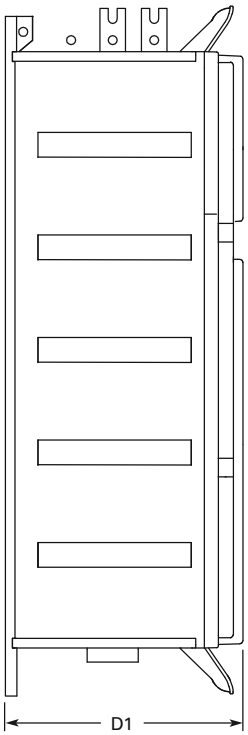

Side

Voltage	Amps	H1	H2	H3	D1	W1	W2	W3	W4	R1 Dia.	R2 Dia.	Weight Lbs (kg)
380–500 Vac	1370–2300	42.38 (1076.5)	1.57 (40.0)	39.37 (1000.0)	14.65 (372.0)	29.06 (738.0)	0.91 (23.0)	7.87 (200.0)	9.69 (246)	0.51 (13.0)	0.55 (14.0)	617 (280)
525–690 Vac	820–1500											

Control Unit

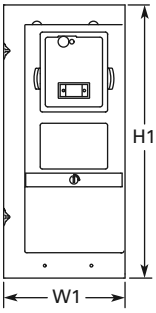

Front

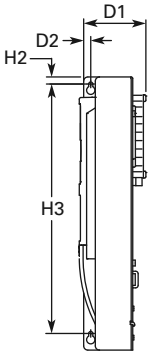

Side

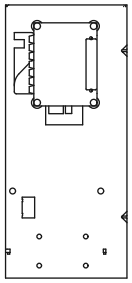

Back

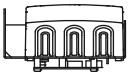

Bottom

H1	H2	H3	D1	D2	W1
12.93 (328.5)	0.33 (8.5)	11.81 (300.0)	2.95 (75.0)	0.33 (8.5)	5.75 (146.0)

SPA/SPN/SPI Common DC Bus Drive Products

Contents

Description	*Page*
SPA/SPN/SPI Common DC Bus Drives	
Application Description	**V6-T2-356**
Product Comparison	**V6-T2-356**
Features	**V6-T2-357**
Standards and Certifications	**V6-T2-357**
Catalog Number Selection	**V6-T2-357**
Product Selection	**V6-T2-359**
Options	**V6-T2-361**
Technical Data and Specifications	**V6-T2-362**
Wiring Diagrams	**V6-T2-364**
Dimensions	**V6-T2-365**

Product Description

Eaton offers a comprehensive range of common DC bus drive products. The product family covers a number of front-end units and inverter units in the entire power range from 1-1/2 to 2000 horsepower at 460 V and 690 V. The drive components are built on the SPX technology.

Front-End Units

The front-end units convert a mains AC voltage and current into a DC voltage and current. The power is transferred from the mains to a common DC bus (and, in certain cases, vice versa).

The SPA (active front-end) unit is a bidirectional (regenerative) power converter for the front end of a common DC bus drive line up. An external LCL filter is used at the input. This unit is suitable in applications where low mains harmonics are required.

The SPN (non-regenerative front-end) unit is a uni-directional (motoring) power converter for the front-end of a common DC bus drive line-up. The device operates as a diode bridge using diode/thyristor components. A dedicated external choke is used at the input. The unit has the capacity to charge a common DC bus. This unit is suitable as a rectifying device when a "normal" level of harmonics is accepted and no regeneration to the mains is required.

Inverter Unit

The SPI Inverter Unit is a bidirectional DC-fed power inverter for the supply and control of AC motors. The inverter is supplied from a common DC bus drive line-up. A charging circuit is needed in case a connection to a live DC bus is required. The DC side charging circuit is integrated up to 75 kW (FR4–FR8) and external for higher power ratings (FI9–FI14).

Application Description

The common DC bus product portfolio fulfills all solution demands with a flexible architecture.

Front end units are selected according to the level of harmonics and power requirements. Typical drive system configurations are illustrated the following figures.

SPA + Inverters

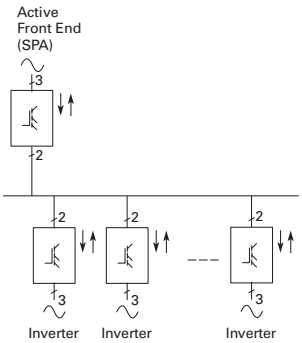

- Low harmonics, $-P_{mains} \approx +P_{mains}/P_{mains} \leq \Sigma P_{INU}$
- Suitable for almost every application

SPN + Inverters

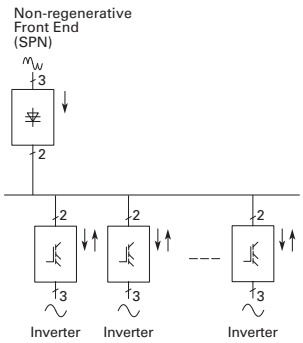

- Low total mains power, $P_{mains} \leq \Sigma P_{INU}$
- Suitable e.g. for small processing line with un- and recoiler, em-stop coasting

Combination Configuration

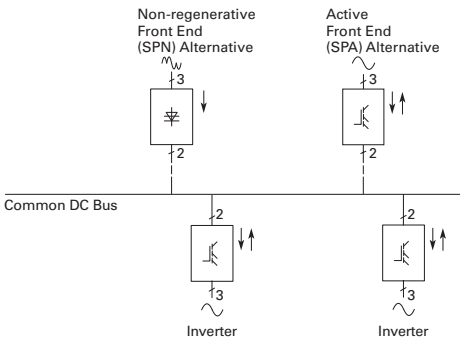

Common DC bus components are used in a multitude of combinations. Drives which are braking can transfer the energy directly to the drives in motoring mode.

Product Comparison

Advantages over Conventional Front Ends

Eaton Front Ends vs. Conventional

	Non-Regenerative Front End	Active Front End	Conventional Regenerative Front End ①
Input device	Choke (L)	Filter (LCL)	Choke or auto-transformer (L)
Bridge type	Diode/thyristor bridge	IGBT bridge, two-level type	Anti-parallel connected thyristor bridge
Type of operation	Controlled half-bridge	High frequency modulation (1.5 to 3.6 kHz)	Firing angle controlled
Direction of power	Motoring	Motoring and regenerating	Motoring and regenerating
Charging	Constant current	External required	Usually internal
DC voltage	Nominal (approx. 1.35 alternative U_N)	Stable at +10% of nominal (approx. 110% of 1.35 alternative U_N)	Lowered DC voltage for commutation margin (e.g. 17% fi approx. 83% of 1.35 alternative U_N) or autotransformer on regenerative bridge
THD	Similar to six-pulse bridge normal <40%	Very low	Similar to six-pulse bridge or worse

Note

① Conventional regenerative front end (a.k.a. “anti-parallel thyristor bridge”) is not available from Eaton.

Features

Standard Features

Feature	SPI FR4, 6, 7	FR8	FI9–FI14	SPA FI9–FI14	SPN FI9
IP00	—	■	■	■	■
IP21	■	—	—	—	—
Air cooling	■	■	■	■	■
Standard board	■	■	■	■	
Varnished board	—	—	—	—	—
Alphanumeric keypad	■	■	■	■	—
EMC class T (EN 61800-3 for IT networks)	■	■	■	■	■
Safety CE/UL	■	■	■	■	■
Input choke	—	—	—	—	■
LCL filter	—	—	—	■	—
No integrated charging	—	—	■	■	—
Integrated charging (DC side)	■	■	—	—	■
Diode/thyristor rectifier	—	—	—	—	■
IGBT	■	■	■	■	—

Standards and Certifications

- CE
- UL
- cUL
- EN 61800-5-1 (2003)

Catalog Number Selection

Active Front End

SPA 205 A 0 – 4 A 3 N 1

Product Family
SPA = Active Front End

Current Rating

480 V	575 V
205 = 205 A	**125** = 125 A
385 = 385 A	**325** = 325 A
H10 = 1150 A	**920** = 920 A

Software Series
A = Standard

Enclosure Rating
0 = Chassis

Voltage Rating
4 = 480 V
5 = 575 V

Keypad
A = Alphanumeric

EMC Level
3 = ***IT*** network

Brake Chopper Options
N = No brake chopper circuit

Board Modifications
1 = Standard boards
2 = Varnished boards

Non-Regenerative Front End

SPN 510 A 0 – 4 A 3 N 1

Product Family
SPN = Non-regenerative front end

Current Rating
480 V/575 V
510 = 510 A

Software Series
A = Standard

Enclosure Rating
0 = Chassis

Voltage Rating
4 = 480 V
5 = 575 V

Keypad
A = Alphanumeric

EMC Level
3 = ***IT*** network

Brake Chopper Options
N = No brake chopper circuit

Board Modifications
1 = Standard boards
2 = Varnished boards

SPI Inverter Unit

SPI 016 A 1 – 4 A 3 N 1

Product Family
SPI = Inverter unit

Current Rating

480 V (FR4–FR8)		575 V (FR6–FR8)	
003 = 3.3 A	**031** = 31 A	**003** = 3.2 A	**022** = 22 A
007 = 7.6 A	**038** = 38 A	**004** = 4.5 A	**027** = 27 A
009 = 9 A	**061** = 61 A	**005** = 5.5 A	**034** = 34 A
012 = 12 A	**071** = 72 A	**007** = 7.5 A	**041** = 41 A
016 = 16 A	**087** = 87 A	**010** = 10 A	**052** = 52 A
023 = 23 A	**105** = 105 A	**013** = 13.5 A	**062** = 62 A
		018 = 18 A	**080** = 80 A
480 V (FI9–FI13)		**575 V (FI9–FI14)**	
140 = 140 A	**730** = 730 A	**100** = 100 A	**502** = 502 A
170 = 170 A	**820** = 820 A	**125** = 125 A	**590** = 590 A
205 = 205 A	**920** = 920 A	**144** = 144 A	**650** = 650 A
245 = 245 A	**H10** = 1030 A	**170** = 170 A	**820** = 820 A
300 = 300 A	**H11** = 1150 A	**208** = 207 A	**920** = 920 A
385 = 385 A	**H13** = 1300 A	**261** = 261 A	**H10** = 1030 A
460 = 460 A	**H16** = 1600 A	**325** = 325 A	**H13** = 1300 A
520 = 520 A	**H19** = 1940 A	**385** = 385 A	**H15** = 1500 A
590 = 590 A	**H23** = 2300 A	**460** = 460 A	**H19** = 1900 A
650 = 650 A			

Software Series
A = Standard

Enclosure Rating
1 = NEMA Type 1/IP21
0 = Chassis

Voltage Rating
4 = 480 V
5 = 575 V

Keypad
A = Alphanumeric

EMC Level
3 = ***IT*** network

Brake Chopper Options
N = No brake chopper circuit

Board Modifications
1 = Standard boards
2 = Varnished boards

Product Selection

Common DC Bus Drive Products

SPA Active Front End 480 V

	Low Overload (AC Current)		High Overload (AC Current)		Imax	
Frame	**$I_{L\text{-}cont}$ (A)**	**$I_{1\ min}$ (A)**	**$I_{H\text{-}cont}$ (A)**	**$I_{1\ min}$ (A)**	**I_{2s} (A)**	**Catalog Number**
FI9	261	287	205	308	349	**SPA205A0-4A3N1**
FI10	460	506	385	578	693	**SPA385A0-4A3N1**
FI13	1300	1430	1150	1725	2070	**SPAH11A0-4A3N1**

SPN Non-Regenerative Front End 480 V

	Low Overload (AC Current)		High Overload (AC Current)		Imax	
Frame	**$I_{L\text{-}cont}$ (A)**	**$I_{1\ min}$ (A)**	**$I_{H\text{-}cont}$ (A)**	**$I_{1\ min}$ (A)**	**I_{2s} (A)**	**Catalog Number**
FI9	520	572	460	690	828	**SPN460A0-4A3N1**

SPI Inverter Unit 480 V

	Low Overload (AC Current)		High Overload (AC Current)		Imax	
Frame	**$I_{L\text{-}cont}$ (A)**	**$I_{1\ min}$ (A)**	**$I_{H\text{-}cont}$ (A)**	**$I_{1\ min}$ (A)**	**I_{2s} (A)**	**Catalog Number**
FR4	4.3	4.7	3.3	5	6.2	**SPI003A1-4A3N1**
	9	9.9	7.6	11.4	14	**SPI007A1-4A3N1**
	12	13.2	9	13.5	18	**SPI009A1-4A3N1**
FR6	16	17.6	12	18	24	**SPI012A1-4A3N1**
	23	25.3	16	24	32	**SPI016A1-4A3N1**
	31	34	23	35	46	**SPI023A1-4A3N1**
	38	42	31	47	62	**SPI031A1-4A3N1**
	46	51	38	57	76	**SPI038A1-4A3N1**
FR7	72	79	61	92	122	**SPI061A1-4A3N1**
	87	96	72	108	144	**SPI072A1-4A3N1**
	105	116	87	131	174	**SPI087A1-4A3N1**
FR8	140	154	105	158	210	**SPI105A0-4A3N1**
FI9	170	187	140	210	280	**SPI140A0-4A3N1**
	205	226	170	255	336	**SPI170A0-4A3N1**
	261	287	205	308	349	**SPI205A0-4A3N1**
	300	330	245	379	444	**SPI245A0-4A3N1**
FI10	385	424	300	450	540	**SPI300A0-4A3N1**
	460	506	385	578	693	**SPI385A0-4A3N1**
	520	572	460	690	828	**SPI460A0-4A3N1**
FI12	590	649	520	780	936	**SPI520A0-4A3N1**
	650	715	590	885	1062	**SPI590A0-4A3N1**
	730	803	650	975	1170	**SPI650A0-4A3N1**
	820	902	730	1095	1314	**SPI730A0-4A3N1**
	920	1012	820	1230	1476	**SPI820A0-4A3N1**
	1030	1133	920	1380	1656	**SPI920A0-4A3N1**
FI13	1150	1265	1030	1545	1854	**SPIH10A0-4A3N1**
	1300	1430	1150	1720	2070	**SPIH11A0-4A3N1**
	1450	1595	1300	1950	2340	**SPIH13A0-4A3N1**
FI14	1770	1947	1600	2400	2880	**SPIH16A0-4A3N1**
	2150	2365	1940	2910	3492	**SPIH19A0-4A3N1**

Note

For filter and line reactor information, see **Page [NEED REF] CONTENT WAS DELETED**.

SPA Active Front End 575 V

Frame	Low Overload (AC Current) $I_{L\text{-}cont}$ (A)	$I_{1\ min}$ (A)	High Overload (AC Current) $I_{H\text{-}cont}$ (A)	$I_{1\ min}$ (A)	Imax I_{2s} (A)	Catalog Number
FI9	144	158	125	188	213	**SPA125A0-5A3N1**
FI10	385	424	325	488	585	**SPA325A0-5A3N1**
FI13	1030	1133	920	1380	1656	**SPA920A0-5A3N1**

SPN Non-Regenerative Front End 575 V

Frame	Low Overload (AC Current) $I_{L\text{-}cont}$ (A)	$I_{1\ min}$ (A)	High Overload (AC Current) $I_{H\text{-}cont}$ (A)	$I_{1\ min}$ (A)	Imax I_{2s} (A)	Catalog Number
FI9	600	660	510	732	888	**SPN510A0-5A3N1**

SPI Inverter Unit 575 V

Frame	Low Overload (AC Current) $I_{L\text{-}cont}$ (A)	$I_{1\ min}$ (A)	High Overload (AC Current) $I_{H\text{-}cont}$ (A)	$I_{1\ min}$ (A)	Imax I_{2s} (A)	Catalog Number
FR6	4.5	5	3.2	5	6.4	**SPI003A1-5A3N1**
	5.5	6	4.5	7	9	**SPI004A1-5A3N1**
	7.5	8	5.5	8	11	**SPI005A1-5A3N1**
	10	11	7.5	11	15	**SPI007A1-5A3N1**
	13.5	15	10	15	20	**SPI010A1-5A3N1**
	18	20	13.5	20	27	**SPI013A1-5A3N1**
	22	24	18	27	36	**SPI018A1-5A3N1**
	27	30	22	33	44	**SPI022A1-5A3N1**
	34	37	27	41	54	**SPI027A1-5A3N1**
FR7	41	45	34	51	68	**SPI034A1-5A3N1**
	52	57	41	62	82	**SPI041A1-5A3N1**
FR8	62	68	52	78	104	**SPI052A0-5A3N1**
	80	88	62	93	124	**SPI062A0-5A3N1**
	100	110	80	120	160	**SPI080A0-5A3N1**
FI9	125	138	100	150	200	**SPI100A0-5A3N1**
	144	158	125	188	213	**SPI125A0-5A3N1**
	170	187	144	216	245	**SPI144A0-5A3N1**
	208	229	170	255	289	**SPI170A0-5A3N1**
FI10	261	287	208	312	375	**SPI208A0-5A3N1**
	325	358	261	392	470	**SPI261A0-5A3N1**
	385	424	325	488	585	**SPI325A0-5A3N1**
FI12	460	506	385	578	693	**SPI385A0-5A3N1**
	502	552	460	690	828	**SPI460A0-5A3N1**
	590	649	502	753	904	**SPI502A0-5A3N1**
	650	715	590	885	1062	**SPI590A0-5A3N1**
	750	825	650	975	1170	**SPI650A0-5A3N1**
FI13	920	1012	820	1230	1476	**SPI820A0-5A3N1**
	1030	1133	920	1380	1656	**SPI920A0-5A3N1**
	1180	1298	1030	1464	1755	**SPIH10A0-5A3N1**
FI14	1500	1650	1300	1950	2340	**SPIH13A0-5A3N1**
	1900	2090	1500	2250	2700	**SPIH15A0-5A3N1**
	2250	2475	1900	2782	3335	**SPIH19A0-5A3N1**

Line Reactor

Line Reactor for Non-Regenerative Front End (480/575 VV)

Amps	Watts Losses	Catalog Number
600	493	**CHK600**

Options

SVX Series Option Board Kits

The SVX Series drives can accommodate a wide selection of expander and adapter option boards to customize the drive for your application needs. The drive's control unit is designed to accept a total of five option boards.

The SVX Series factory installed standard board configuration includes an A9 I/O board and an A2 relay output board, which are installed in slots A and B.

Option Boards

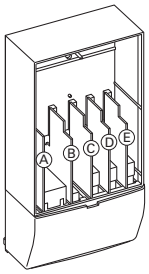

Option Board Kits

Option Kit Description ①	Allowed Slot Locations ②	Field Installed Catalog Number	Factory Installed Option Designator	SVX Ready Programs Basic	Local/ Remote	Standard	MSS	PID	Multi-P.	PFC
Standard I/O Cards										
2 RO (NC-NO)	B	**OPTA2**	—	■	■	■	■	■	■	■
6 DI, 1 DO, 2 AI, 1 AO, 1 +10 Vdc ref, 2 ext +24 Vdc/EXT +24 Vdc	A	**OPTA9**	—	■	■	■	■	■	■	■
Extended I/O Cards										
2 RO, therm	B	**OPTA3**	**A3**	—	■	■	■	■	■	■
Encoder low volt +5 V/15 V24 V	C	**OPTA4**	**A4**	—	■	■	■	■	■	■
Encoder high volt +15 V/24 V	C	**OPTA5**	**A5**	—	■	■	■	■	■	■
Double encoder	C	**OPTA7**	**A7**	■	■	■	■	■	■	■
6 DI, 1 DO, 2 AI, 1 AO	A	**OPTA8**	**A8**	—	■	■	■	■	■	■
3 DI (encoder 10–24 V), out +15 V/+24 V, 2 DO (pulse+direction)	C	**OPTAE**	**AE**	■	■	■	■	■	■	■
6 DI, 1 ext +24 Vdc/EXT +24 Vdc	B, C, **D**, E	**OPTB1**	**B1**	—	—	—	—	—	■	■
1 RO (NC-NO), 1 RO (NO), 1 therm	B, C, **D**, E	**OPTB2**	**B2**	—	—	—	—	—	■	■
1 AI (mA isolated), 2 AO (mA isolated), 1 ext +24 Vdc/EXT +24 Vdc	B, C, **D**, E	**OPTB4**	**B4**	—	■	■	■	■	■	■
3 RO (NO)	B, C, **D**, E	**OPTB5**	**B5**	—	—	—	—	—	■	■
1 ext +24 Vdc/EXT +24 Vdc, 3 Pt100	B, C, **D**, E	**OPTB8**	**B8**	—	—	—	—	—	—	—
1 RO (NO), 5 DI 42–240 Vac input	B, C, **D**, E	**OPTB9**	**B9**	—	—	—	—	—	■	■
SPI, absolute encoder	C	**OPTBB**	**BB**	—	—	—	—	—	—	—
Communication Cards ③										
Modbus	D, **E**	**OPTC2**	**C2**	■	■	■	■	■	■	■
Johnson Controls N2	D, **E**	**OPTC2**	**CA**	—	—	—	—	—	—	—
Modbus TCP	D, **E**	**OPTCI**	**CI**	■	■	■	■	■	■	■
BACnet	D, **E**	**OPTCJ**	**CJ**	■	■	■	■	■	■	■
EtherNet/IP	D, **E**	**OPTCQ**	**CQ**	■	■	■	■	■	■	■
PROFIBUS DP	D, **E**	**OPTC3**	**C3**	■	■	■	■	■	■	■
LonWorks	D, **E**	**OPTC4**	**C4**	■	■	■	■	■	■	■
PROFIBUS DP (D9 connector)	D, **E**	**OPTC5**	**C5**	■	■	■	■	■	■	■
CANopen (slave)	D, **E**	**OPTC6**	**C6**	■	■	■	■	■	■	■
DeviceNet	D, **E**	**OPTC7**	**C7**	■	■	■	■	■	■	■
Modbus (D9 type connector)	D, **E**	**OPTC8**	**C8**	■	■	■	■	■	■	■
Adapter	D, **E**	**OPTD1**	**D1**	■	■	■	■	■	■	■
Adapter	D, **E**	**OPTD2V**	**D2**	■	■	■	■	■	■	■
RS-232 with D9 connection	D, **E**	**OPTD3**	**D3**	■	■	■	■	■	■	■
Keypad										
9000X Series local/remote keypad (replacement keypad)	—	**KEYPAD-LOC/REM**	—	—	—	—	—	—	—	■
9000X Series remote mount keypad unit (keypad not included, includes 10 ft cable, keypad holder, mounting hardware)	—	**OPTRMT-KIT-9000X**	—	—	—	—	—	—	—	—
9000X Series RS-232 cable, 13 ft	—	**PP00104**	—	—	—	—	—	—	—	—

Notes

① AI = Analog Input; AO = Analog Output, DI = Digital Input, DO = Digital Output, RO = Relay Output

② Option card must be installed in one of the slots listed for that card. Slot indicated in bold is the preferred location.

③ OPTC2 is a multi-protocol option card.

Technical Data and Specifications

SPA/SPN/SPI

Description	Specification
Supply Connection	
Input voltage U_{in} (AC) front end modules	380–500 Vac/525–690 Vac –10% to 10%
Input voltage U_{in} (DC) inverter	465–800 Vdc/640–1100 Vdc –0% to 0%, the waviness of the inverter supply voltage, formed in rectification of the electric network's alternating voltage in basic frequency, must be less than 50 V peak-to-peak
Output voltage U_{out} (AC) inverter	3 ~ 0–U_{in}/1.4
Output voltage U_{out} (DC) active front end module	10.10 x 1.35 x U_{in} (factory default)
Output voltage U_{out} (DC) non-regenerative front end module	1.35 x U_{in}
Ambient Conditions	
Ambient operating temperature	14 (no frost) to 122 °F (–10 to 50 °C): I_H 14 (no frost) to 104 °F (–10 to 40 °C): I_L
Storage temperature	–40 to 158 °F (–40 to 70 °C)
Relative humidity	0 to 95% RH, non-condensing, non-corrosive, no dripping water
Air quality	
Chemical vapors	IEC 721-3-3, unit in operation, class 3C2
Mechanical particles	IEC 721-3-3, unit in operation, class 3S2
Altitude	100% load capacity (no derating) up to 1000 m 1% derating for each 100 m above 1000 m; max. 3000 m
Vibration	5–150 Hz
EN50178/EN60068-2-6	Displacement amplitude 0.25 mm (peak) at 3–15.8 Hz Max acceleration amplitude 1G at 15.8–150 Hz
Shock EN50178, EN60068-2-27	UPS Drop Test (for applicable UPS weights) Storage and shipping: max 15 g, 11 ms (in package)
Cooling capacity required	Approximately 2%
Cooling air required	FR4 41 cfm, FR6 250 cfm, FR7 250 cfm, FR8 383 cfm FI9 677 cfm, FI10 824 cfm, FI12 1648 cfm, FI13 2472 cfm
Unit enclosure class	FR4–FR7 NEMA Type 1/IP21; FR8, FI9–FI14 chassis (IP00)
EMC (at fault settings)	
Immunity	Fulfill all EMC immunity requirements
Safety	
Approvals	CE, UL, cUL, EN 61800-5-1 (2003), see unit nameplate for more detailed approvals
Control Connections	
Analog input voltage	0–10 V, R_i = 200 kohms, (–10 V to 10 V joystick control) Resolution 0.1%, accuracy ±1%
Analog input current	0(4)–20 mA, R_i = 250 ohms differential
Digital inputs	6, positive or negative logic; 18–30 Vdc
Auxiliary voltage	+24 V, ±15%, max. 250 mA
Output reference voltage	+10 V, +3%, max. load 10 mA
Analog output	0(4)–20 mA; RL max. 500 ohms; resolution 10 bits Accuracy ±2%
Digital outputs	Open collector output, 50 mA/48V
Relay outputs	2 programmable change-over relay outputs Switching capacity: 24 Vdc/8 A, 250 Vac/8 A, 125 Vdc/0.4 A Min. switching load: 5 V/10 mA

SPA/SPN/SPI, continued

Description	Specification
Protections	
Overvoltage protection	480 V/911 Vdc, 575 V/1200 Vdc
Undervoltage protection	480 V/333 Vdc, 575 V/460 Vdc
Ground fault protection	In case of ground fault in motor or motor cable, only the inverter is protected
Motor phase supervision	Trips if any of the output phases is missing
Overcurrent protection	Yes
Unit overtemperature protection	Yes
Motor overload protection	Yes
Motor stall protection	Yes
Motor underload protection	Yes
Short-circuit protection of 24 V and 10 V reference voltages	Yes

Input Fuses

SHT fuses can be assembled into same-size DIN fuse base.

SPA/SPN/SPI

Module Component	Frame	Bussmann Fuse Type (aR)	Size	U_N (V)	I_N (A)	Qty.
Inverter Units						
SPI003A1-4	FR4	170M1560	0	690	20	2
SPI007A1-4	FR4	170M1562	0	690	63	2
SPI009A1-4	FR4	170M1562	0	690	63	2
SPI012A1-4	FR6	170M1565	0	690	63	2
SPI016A1-4	FR6	170M1565	0	690	63	2
SPI023A1-4	FR6	170M1565	0	690	63	2
SPI031A1-4	FR6	170M1567	0	690	100	2
SPI038A1-4	FR6	170M1567	0	690	100	2
SPI061A1-4	FR7	170M1570	0	690	200	2
SPI072A1-4	FR7	170M1570	0	690	200	2
SPI087A1-4	FR7	170M1571	0	690	250	2
SPI105A0-4	FR8	170M3819	DIN1	690	400	2
SPI140A0-4	FR8	170M3819	DIN1	690	400	2
SPI170A0-4	FR8	170M3819	DIN1	690	400	2
SPI205A0-4	FI9	170M6812	DIN3	690	800	2
SPI245A0-4	FI9	170M6812	DIN3	690	800	2
SPI300A0-4	FI10	170M8547	3SHT	690	1250	2
SPI385A0-4	FI10	170M8547	3SHT	690	1250	2
SPI460A0-4	FI10	170M8547	3SHT	690	1250	2
SPI520A0-4	FI12	170M8547	3SHT	690	1250	2 x 2
SPI590A0-4	FI12	170M8547	3SHT	690	1250	2 x 2
SPI650A0-4	FI12	170M8547	3SHT	690	1250	2 x 2
SPI730A0-4	FI12	170M8547	3SHT	690	1250	2 x 2
SPI820A0-4	FI12	170M8547	3SHT	690	1250	2 x 2
SPI920A0-4	FI12	170M8547	3SHT	690	1250	2 x 2
SPIH10A0-4	FI13	170M8547	3SHT	690	1250	6
SPIH11A0-4	FI13	170M8547	3SHT	690	1250	6
SPIH13A0-4	FI13	170M8547	3SHT	690	1250	6
SPIH16A0-4	FI14	170M8547	3SHT	690	1250	2 x 6
SPIH19A0-4	FI14	170M8547	3SHT	690	1250	2 x 6
SPIH23A0-4	FI14	170M8547	3SHT	690	1250	2 x 6

SHT fuses can be assembled into same-size DIN fuse base.

SPA/SPN/SPI, continued

Module Component	Frame	Bussmann Fuse Type (aR)	Size	U_N (V)	I_N (A)	Qty.
Active Front Ends						
SPA205 A0-4	FI9	170 m6202	3SHT	1250	500	3
SPA385 A0-4	FI10	170 m6277	3SHT	1250	1000	3
SPAH10 A0-4	FI13	170 m6277	3SHT	1250	1000	3 x 3
Non-Regenerative Front Ends						
SPN468 A0-4	FI9	170 m8547	3SHT	690	1250	3

Wiring Diagrams

SPA—Active Front End

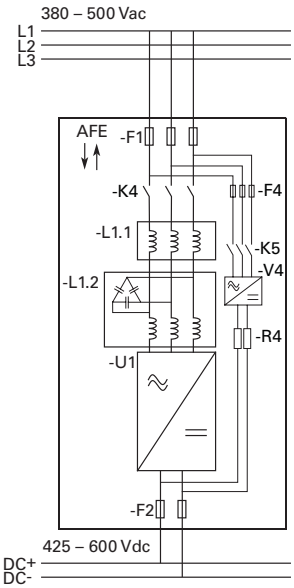

SPN—Non-Regenerative Front End

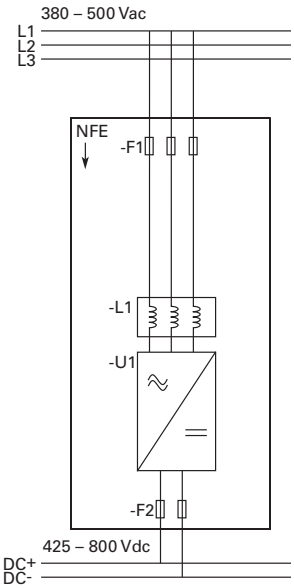

SPI—Inverter Unit (FR4–FR8)

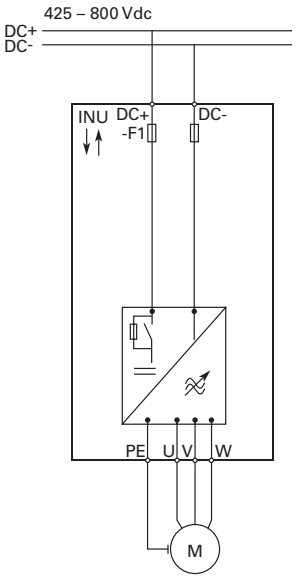

SPI—Inverter Unit (FI9–FI14)

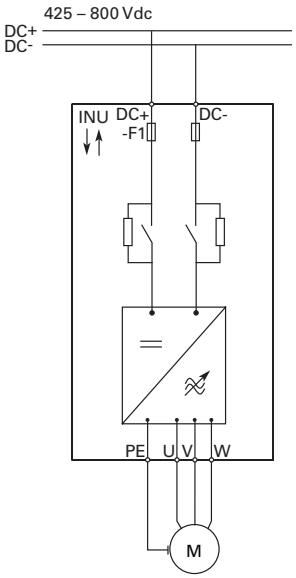

Dimensions

Approximate Dimensions in Inches (mm)

SPA/SPN/SPI

Frame	Height	Width	Depth	Weight Lbs (kg)
Active Front Ends				
FI9	40.6 (1030)	9.4 (239)	14.6 (372)	148 (67)
FI10	40.6 (1032)	9.4 (239)	21.7 (552)	220 (100)
FI12	40.6 (1032)	2 x 9.4 (2 x 239)	21.7 (552)	441 (200)
FI13	40.6 (1032)	27.9 (708)	21.8 (553)	674 (306)
FI14	40.6 (1032)	2 x 27.9 (2 x 708)	21.8 (553)	1348 (612)
Non-Regenerative Front Ends				
FI9	40.6 (1030)	9.4 (239)	14.6 (372)	148 (67)
Inverter Units				
FR4	11.5 (292)	5.0 (128)	7.5 (190)	11 (5)
FR6	20.4 (519)	7.7 (195)	9.3 (237)	35 (16)
FR7	23.3 (591)	9.3 (237)	10.1 (257)	64 (29)
FR8	29.8 (758)	11.4 (289)	13.5 (344)	106 (48)
FI9	40.6 (1030)	9.4 (239)	14.6 (372)	148 (67)
FI10	40.6 (1032)	9.4 (239)	21.7 (552)	220 (100)
FI12	40.6 (1032)	2 x 9.4 (2 x 239)	21.7 (552)	441 (200)
FI13	40.6 (1032)	27.9 (708)	21.8 (553)	674 (306)
FI14	40.6 (1032)	2 x 27.9 (2 x 708)	21.8 (553)	1348 (612)